ROBINSON HELICOPTER COMPANY

R22 MAINTENANCE MANUAL
AND INSTRUCTIONS FOR CONTINUED AIRWORTHINESS
RTR 060 VOLUME I

Type Certificate Number H10WE

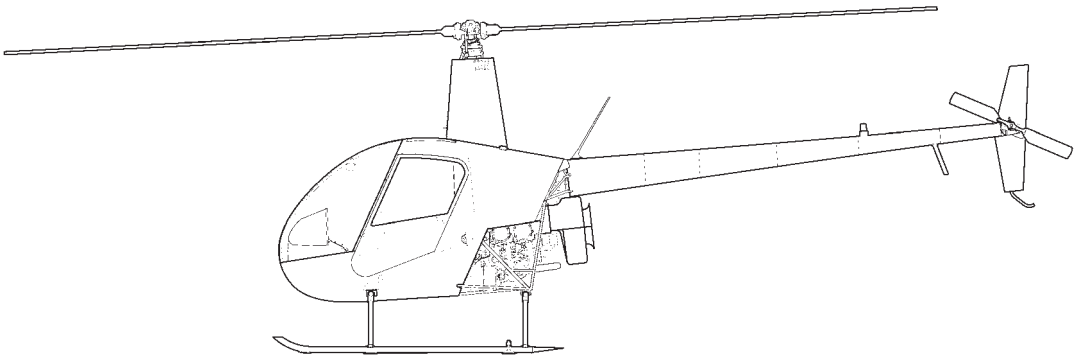

Robinson Helicopter Company
2901 Airport Drive
Torrance, California 90505-6115
UNITED STATES

Phone: (310) 539-0508
Fax: (310) 539-5198
Web: www.robinsonheli.com

OFFICE HOURS

Monday through Friday, 7:30 a.m. to 4:30 p.m., Pacific Time.
Lunch hour is 11:30 a.m. to 12:30 p.m.

HOLIDAYS

Please visit www.robinsonheli.com and click on the Customer Support tab for a complete list of holidays and company shutdowns.

CUSTOMER SUPPORT AND ORDERS

Please visit www.robinsonheli.com and click on the Customer Support tab for a complete service directory.

Procure parts from any R22 Dealer or Service Center, or order directly from assigned RHC Customer Service Representative via email, fax, or phone.

PUBLICATIONS

Please visit www.robinsonheli.com and click on the Publications tab to view our publications electronically.

SUBSCRIPTION ORDER AND RENEWAL FORM

Name: _____ Phone: _____

Address: _____ Fax: _____

_____ Email: _____

_____

I Own R22 Serial Number(s): _____

I Own R44/R44 II Serial Number(s): _____

I Own R66 Serial Number(s): _____

Covers updates during the subscription period only. Requests for revisions produced before the subscription period are subject to an additional charge at the full subscription rate for each past year requested.

MODEL/CLASS	DESCRIPTION	PRICE/YR.	QTY.	TOTAL
R22				
A	Future updates to R22 Pilot's Operating Handbook & Safety Notices	$15.00	____	_____
B	Future updates to R22 Pilot's Operating Handbook & Safety Notices, R22 Service Bulletins & Service Letters	$25.00	____	_____
C	Future updates to R22 Pilot's Operating Handbook & Safety Notices, R22 Service Bulletins, Service Letters, & R22 Maintenance Manual/Illustrated Parts Catalog revisions	$45.00	____	_____
R44				
Q	Future updates to R44 Pilot's Operating Handbook & Safety Notices	$15.00	____	_____
R	Future updates to R44 Pilot's Operating Handbook & Safety Notices, R44 Service Bulletins & Service Letters	$25.00	____	_____
S	Future updates to R44 Pilot's Operating Handbook & Safety Notices, R44 Service Bulletins, Service Letters, & R44 Maintenance Manual/Illustrated Parts Catalog revisions	$45.00	____	_____
R44 II				
V	Future updates to R44 II Pilot's Operating Handbook & Safety Notices	$15.00	____	_____
W	Future updates to R44 II Pilot's Operating Handbook & Safety Notices, R44 Service Bulletins & Service Letters	$25.00	____	_____
X	Future updates to R44 II Pilot's Operating Handbook & Safety Notices, R44 Service Bulletins, Service Letters, & R44 Maintenance Manual/Illustrated Parts Catalog revisions	$45.00	____	_____
R66				
J	Future updates to R66 Pilot's Operating Handbook & Safety Notices	$15.00	____	_____
K	Future updates to R66 Pilot's Operating Handbook & Safety Notices, R66 Service Bulletins & Service Letters	$25.00	____	_____
L	Future updates to R66 Pilot's Operating Handbook & Safety Notices, R66 Service Bulletins, Service Letters, & R66 Maintenance Manual/Illustrated Parts Catalog revisions	$45.00	____	_____

Method of Payment: No cash or CODs. We cannot be responsible for cash sent by mail. For faster processing, order online.

☐ U.S. Check, Money Order, payable to Robinson Helicopter Company
☐ Wire Transfer (subscription will not take effect until wire transfer has been received)
☐ VISA, MasterCard or American Express

Credit Card Number: _____ Month / Year: _____

Cardholder Signature: _____ Verification Code: _____

Billing Zip: _____

Return to: **ROBINSON HELICOPTER COMPANY,** Attn: Subscriptions
2901 Airport Drive, Torrance, CA 90505 / Fax: (310) 539-5198

CHAPTER LIST

	Introduction
Chapter 1	General
Chapter 2	Inspection
Chapter 3	Life-Limited Components
Chapter 4	Airframe
Chapter 5	Landing Gear
Chapter 6	Powerplant
Chapter 7	Drive Train
Chapter 8	Flight Controls
Chapter 9	Rotor Systems
Chapter 10	Rigging, Track and Balance
Chapter 11	Heating and Ventilation
Chapter 12	Fuel System
Chapter 13	Instruments
Chapter 14	Electrical and Avionics Systems
Chapter 15	Furnishings
Chapter 16	Special Tools
Chapter 17	Revision Log

RECOMMENDED CHANGE REPORT

Please direct recommended changes to RHC Technical Publications via the email address listed below, by phone, or by submitting a duplicate of this completed form by fax or mail. Please include or have available the information detailed by this form.

Recommended changes may include but are not limited to: general comments, corrections, omitted information, or clarification of instructions.

Please send recommendations to:

Email: techpubs@robinsonheli.com
Phone: (310) 539-0508
Fax: (310) 539-5198

Robinson Helicopter Company
Attention: Technical Publications
2901 Airport Drive
Torrance, CA 90505-6115
UNITED STATES

Date: _____ Publication: _____

Name: _____ Chapter: _____

Company: _____ Section: _____

Helicopter Model: _____ Page: _____

Serial Number: _____ Revision: _____

Phone: _____

Email: _____

COMMENTS:

_____

_____

_____

_____

_____

_____

_____

_____

_____

_____

LIMITED AIRCRAFT WARRANTY

Effective R22 S/N 3318 & on; R44 S/N 1202 & on

Robinson Helicopter Company, Inc. (hereafter referred to as RHC) warrants each new helicopter to be free from defects in material and workmanship appearing within two years from the date of delivery from the RHC factory or during the first one thousand (1000) hours of operation, whichever event occurs first; provided, the aircraft has been subjected to normal use and service. This Warranty is limited to repair or replacement on an exchange basis, as selected by RHC, of any part, which upon examination by RHC is deemed to have been defective when the aircraft left the factory. A new warranty period is not established for parts replaced under the terms of this Warranty. Such replacement parts are warranted only for the remainder of the original warranty period. This Warranty shall not apply to any helicopter or part which has been repaired or altered outside the factory, and which, in RHC's judgment, has affected the performance or reliability of the helicopter or part. This Warranty shall not apply to any helicopter or part which has been subject to corrosion, misuse, negligence or accident, nor to any parts normally replaced during routine maintenance, such as, air cleaners, skid shoes, rod end or spherical bearings, light bulbs, etc. This Warranty shall not apply to any helicopter, which has been crated for shipping unless such crating is performed by RHC. RHC is not responsible for the cost of shipping parts under the terms of this Warranty. However, RHC will credit the RHC Dealership, which sold and delivered the new helicopter to its original owner, with an allowance for labor performed by that Dealership for removing and reinstalling the defective part. No credit will be issued for trouble-shooting.

RHC makes no Warranty with respect to batteries, instruments, avionics or other trade accessories since they are usually warranted separately by their respective manufacturers. New aircraft are equipped with new engines which have a separate Lycoming limited warranty.

ADDITIONAL WARRANTY FOR MAIN & TAIL GEARBOXES

In addition to the warranty specified above, an extended pro-rated warranty shall apply to the main and tail gearboxes for the first 2200 hours of service or three years from the date of manufacture, whichever event occurs first. During this period, if a gearbox must be overhauled due to failure of a part which was defective when it left the factory, RHC will pro-rate the cost of the overhaul by dividing the hours in service by 2200 or the months in service by thirty-six (36), whichever fraction is greater.

THE FOREGOING WARRANTY IS EXCLUSIVE AND IS GIVEN AND ACCEPTED IN LIEU OF ANY AND ALL OTHER WARRANTIES AND REPRESENTATIONS, EXPRESS, IMPLIED, OR STATUTORY, WHETHER WRITTEN OR ORAL, INCLUDING WITHOUT LIMITATION ANY IMPLIED WARRANTIES OF MERCHANTABILITY, FITNESS FOR A PARTICULAR PURPOSE OR TRADE USAGE, THE REMEDIES OF THE BUYER SHALL BE LIMITED TO THOSE PROVIDED HEREIN. IN NO EVENT WILL THE MANUFACTURER BE LIABLE FOR LOSSES RESULTING FROM LOSS OF USE OF THE HELICOPTER, COLLATERAL, CONSEQUENTIAL OR SPECIAL DAMAGES, OR ANY OTHER COSTS.

Warranty adjustments with respect to any helicopter or parts manufactured by RHC will be made only upon compliance with the following procedure:

(1) The defective part or assembly, together with a written Warranty Claim, must be returned to RHC not later than thirty (30) days after discovery of the defect nor more than thirty (30) days after expiration of the Warranty period.

(2) RHC will, after inspection, determine whether the material or part was defective when it left the factory and will respond accordingly. Final determination of a Warranty adjustment rests with RHC.

ROBINSON HELICOPTER COMPANY, INC.
2901 Airport Drive
Torrance, California 90505 U.S.A.

Effective 1 February 2003

LIMITED PARTS WARRANTY

Robinson Helicopter Company, Inc. (hereafter referred to as RHC) warrants each new helicopter part to be free from defects in material and workmanship appearing within one year from the date of delivery from the RHC factory or during the first one thousand (1000) hours of operation, whichever event occurs first; provided, the part has been subjected to normal use and service. This Warranty is limited to repair or replacement on an exchange basis, as selected by RHC, of any part, which upon examination by RHC is deemed to have been defective when the part left the factory. A new warranty period is not established for parts replaced under the terms of this Warranty. Such replacement parts are warranted only for the remainder of the original warranty period. RHC is not responsible for the cost of removing, shipping, or reinstallation of parts under the terms of this Warranty. This Warranty shall not apply to any part which has been repaired or altered outside the factory, and which, in RHC's judgment, has affected the performance or reliability of the part. This Warranty shall not apply to any part which has been subject to corrosion, misuse, negligence or accident, nor to any parts normally replaced during routine maintenance, such as, air cleaners, skid shoes, rod end or spherical bearings, light bulbs, etc.

RHC makes no Warranty with respect to batteries, instruments, avionics or other trade accessories since they are usually warranted separately by their respective manufacturers.

ADDITIONAL WARRANTY FOR MAIN & TAIL GEARBOXES

In addition to the warranty specified above, an extended pro-rated warranty shall apply to the main and tail gearboxes for the first 2200 hours of service or three years from the date of manufacture, whichever event occurs first. During this period, if a gearbox must be overhauled due to failure of a part which was defective when it left the factory, RHC will pro-rate the cost of the overhaul by dividing the hours in service by 2200 or the months in service by thirty-six (36), whichever fraction is greater.

THE FOREGOING WARRANTY IS EXCLUSIVE AND IS GIVEN AND ACCEPTED IN LIEU OF ANY AND ALL OTHER WARRANTIES AND REPRESENTATIONS, EXPRESS, IMPLIED, OR STATUTORY, WHETHER WRITTEN OR ORAL, INCLUDING WITHOUT LIMITATION ANY IMPLIED WARRANTIES OF MERCHANTABILITY, FITNESS FOR A PARTICULAR PURPOSE OR TRADE USAGE, THE REMEDIES OF THE BUYER SHALL BE LIMITED TO THOSE PROVIDED HEREIN. IN NO EVENT WILL THE MANUFACTURER BE LIABLE FOR LOSSES RESULTING FROM LOSS OF USE OF THE HELICOPTER, COLLATERAL, CONSEQUENTIAL OR SPECIAL DAMAGES, OR ANY OTHER COSTS.

Warranty adjustments with respect to any helicopter or parts manufactured by RHC will be made only upon compliance with the following procedure:

(1) The defective part or assembly, together with a written Warranty Claim, must be returned to RHC not later than thirty (30) days after discovery of the defect nor more than thirty (30) days after expiration of the Warranty period.

(2) RHC will, after inspection, determine whether the material or part was defective when it left the factory and will respond accordingly. Final determination of a Warranty adjustment rests with RHC.

ROBINSON HELICOPTER COMPANY, INC.
2901 Airport Drive
Torrance, California 90505 U.S.A.

01 June 06

CONTENTS

INTRODUCTION

Section	Title	Page
—	Cover Page	i
—	Subscription Order and Renewal Form	ii
—	Chapter List	iii
—	Recommended Change Report	iv
—	Limited Aircraft Warranty	v
—	Limited Parts Warranty	vi
—	Contents	vii

CHAPTER 1 — GENERAL

Section	Title	Page
1.000	Introduction	1.1
1.001	R22 Maintenance Manual Revisions	1.1
1.002	R22 Maintenance Authorization	1.1
1.003	R22 Component Overhaul Authorization	1.1
1.004	Maintenance Record	1.2
1.005	Notations	1.2
1.006	Definitions and Abbreviations	1.3
1.007	Service Directory	1.4
1.008	External Dimensions	1.5
1.009	Version Description	1.8
1.100	Helicopter Servicing	1.11
1.101	Scheduled Maintenance and Inspections	1.11
1.105	Calibration of Tools	1.11
1.110	Lubrication – General	1.11
1.115	Chip Detector Cleaning	1.12
1.120	Main Rotor Gearbox Drain and Flush	1.13
1.130	Tail Rotor Gearbox Drain and Flush	1.14
1.140	A184 Upper Bearing Lubrication	1.15
1.150	Defueling	1.15A
1.160	Storage (Greater than 30 days)	1.15B
1.200	Handling, Jacking, Hoisting, Leveling, and Weighing	1.15D
1.210	Ground Handling	1.15D
1.211	Ground Handling Wheels Installation	1.15D
1.212	Ground Handling Wheels Installation – Float Ship Landing Gear	1.16
1.213	Moving the Helicopter on Ground Handling Wheels	1.18
1.214	Main Rotor Blade Tie-Downs	1.18
1.215	Parking	1.20
1.216	Trailering	1.20
1.220	Jacking, Hoisting, and Leveling	1.21
1.230	Weighing and CG Calculation	1.25
1.231	Preparing Helicopter for Weighing	1.25

CONTENTS

CHAPTER 1 — GENERAL (Continued)

Section	Title	Page
1.232	Weighing Procedure and Calculations	1.25
1.240	Ballast Installation	1.29
1.300	Fastener Torque Requirements	1.31
1.310	General	1.31
1.311	Torque Seal	1.32
1.320	Standard Torques	1.33
1.330	Special Torques	1.34
1.400	Approved Materials	1.38
1.410	Paint Strippers	1.38
1.420	Solvents and Cleaners	1.38
1.430	Fillers and Putty	1.39
1.440	Torque Seal	1.39
1.450	Primers	1.39
1.455	Powder Coat	1.39
1.460	Paints	1.41
1.470	Lubricants	1.43
1.480	Adhesives and Sealants	1.44
1.490	Storage Limits	1.44B
1.500	Part Interchangeability	1.45
1.600	Instructions for Uncrating, Reassembling, and Flight Testing R22 Series Helicopters	1.46
1.700	Replacement Component Identification (Data) Plates	1.48

CHAPTER 2 — INSPECTION

Section	Title	Page
2.000	Introduction	2.1
2.100	General Procedures	2.1
2.110	Ball and Roller Bearings	2.1
2.120	Push-Pull Tubes, Rod Ends, and Spherical Bearings	2.1
2.121	Push-Pull Tubes	2.1
2.122	Rod Ends and Spherical Bearings	2.2
2.125	Elastomeric Bearings	2.3
2.130	Telatemp Indicators	2.6
2.200	Ground and Flight Check For 100-Hour/Annual Inspection	2.7
2.205	Ground Check	2.7
2.210	Run Up	2.9
2.220	Flight Check	2.10
2.300	Airframe Preparation For 100-Hour/Annual Inspection	2.10
2.400	100-Hour/Annual Airframe Inspection	2.11
2.410	Inspection Procedures and Checklist	2.11
2.500	Special Inspections	2.41
2.501	Clutch Actuator Upper and Lower Bearings	2.41
2.502	A181-4 Actuator Lower Bearing Inspection and Lubrication	2.41
2.503	A184 Actuator Upper Bearing Inspection and Lubrication	2.42

CONTENTS

CHAPTER 2 — INSPECTION (Continued)

Section	Title	Page
2.507	V-Belt Inspection	2.43
2.508	Lower Sheave V-Belt Wear Pattern Inspection	2.45
2.510	Tail Skid Strike	2.46
2.520	Tail Rotor Strike	2.47
2.530	Main Rotor Strike	2.48
2.540	Rotor/Engine Overspeed	2.49
2.550	Hard Landing	2.51
2.560	Steel Tube Frame Corrosion	2.53
2.570	Main Rotor Blade Detail Inspection	2.54
2.571	Spar Cover Adhesive Damage (A016-2 main rotor blade only)	2.54
2.572	Main Rotor Blade Sealant and Filler Cracking	2.56
2.573	Visual Inspection of Main Rotor Blade Root Area	2.57
2.580	Float Inspection and Testing	2.58
2.590	Windshield Inspection	2.59
2.600	12-Year Inspection And Limited Overhaul Requirements	2.60
2.610	Inspection Procedure	2.60
2.620	Additional Parts Requiring Replacement on Some R22s	2.62
2.630	Component Inspection Procedure	2.63
2.700	2200-Hour Overhaul Requirements & Instructions	2.64
2.710	Inspection Procedure	2.65
2.720	Additional Parts Requiring Replacement on Some R22s	2.66
2.800	Additional Special Inspections	2.67
2.810	Volcanic Ash Recommendations	2.67
2.820	Lightning Strike	2.68

CHAPTER 3 — LIFE-LIMITED COMPONENTS

Section	Title	Page
3.000	Life-Limited Components	3.1
3.001	Introduction	3.1
3.002	Time-In-Service Records	3.1
3.003	Fatigue Life-Limited Parts	3.1
3.100	Inspection And Overhaul Requirements	3.2
3.110	Powerplant Overhaul Requirements	3.2
3.120	Aircraft Overhaul Requirements	3.2
3.130	12-Year Inspection and Limited Overhaul Requirements	3.2
3.140	Additional Bearing Replacement Requirements	3.2
3.200	Type Certificate Data Sheet (TCDS)	3.2
3.300	Airworthiness Limitations	3.13

CHAPTER 4 — AIRFRAME

Section	Title	Page
4.000	Airframe	4.1
4.001	Introduction	4.1
4.002	Description	4.1

CONTENTS

CHAPTER 4 — AIRFRAME (Continued)

Section	Title	Page
4.100	Fuselage	4.1
4.110	Cabin Assembly	4.1
4.120	Windshield Assembly	4.2
4.121	Windshield Removal	4.2
4.122	Windshield Installation	4.2
4.123	Windshield Replacement	4.3
4.130	Door Removal and Installation	4.4
4.140	Fairing, Cowling and Inspection Panels	4.4
4.141	Side Skirts	4.4
4.142	Mast Fairing	4.6
4.143	Aft Cowling	4.6
4.144	Cabin Inspection Panels	4.6
4.200	Welded Steel Tube Frame Assemblies	4.7
4.210	Left-Hand Frame Assembly	4.8
4.211	Left-Hand Frame Removal	4.8
4.212	Left-Hand Frame Installation	4.8
4.220	Right-Hand Frame Assembly	4.9
4.221	Right-Hand Frame Removal	4.9
4.222	Right-Hand Frame Installation	4.12
4.230	Upper Frame Assembly	4.13
4.231	Upper Frame Removal	4.13
4.232	Upper Frame Installation	4.14
4.240	Strut Assembly Removal and Installation	4.15
4.300	Tailcone And Empennage	4.16
4.310	Tailcone	4.16
4.311	Tailcone Removal	4.16
4.312	Tailcone Installation	4.16
4.313	Tailcone Replacement	4.17
4.314	Tailcone Repair	4.22
4.320	Empennage Assembly	4.22
4.321	Empennage Removal	4.22
4.322	Empennage Installation	4.23
4.323	Upper Stabilizer Replacement	4.23
4.324	Lower Stabilizer Replacement	4.23
4.325	Horizontal Stabilizer Replacement	4.24

CHAPTER 5 — LANDING GEAR

Section	Title	Page
5.000	Landing Gear	5.1
5.001	Introduction	5.1
5.002	Description	5.1
5.100	Landing Gear Assembly	5.1
5.110	Landing Gear Removal	5.1
5.120	Landing Gear Installation	5.3
5.200	Cross Tubes	5.3

CONTENTS

CHAPTER 5 — LANDING GEAR (Continued)

Section	Title	Page
5.210	Cross Tube Removal	5.3
5.220	Cross Tube Installation	5.6
5.300	Skid Tubes	5.6
5.310	Skid Tube Removal	5.6
5.320	Skid Tube Installation	5.6
5.330	Skid Shoe Removal and Replacement	5.6
5.340	Ground Handling Wheel Support Removal and Replacement	5.8
5.400	Preventive Maintenance	5.8
5.500	Float Ship Landing Gear	5.9
5.510	Float Landing Gear Removal	5.9
5.520	Float Landing Gear Installation	5.10
5.530	Float Tube Removal	5.11
5.540	Float Tube Installation	5.11
5.550	Float Tube Repair	5.13

CHAPTER 6 — POWERPLANT

Section	Title	Page
6.000	Powerplant And Related Systems	6.1
6.001	Introduction	6.1
6.002	Description	6.1
6.100	Powerplant	6.2
6.110	Engine Removal	6.2
6.120	Engine Installation	6.2
6.130	Engine Shimming	6.6
6.200	Cooling System	6.9
6.210	Fanwheel Removal	6.9
6.220	Fanwheel Installation	6.12
6.230	(Reserved)	
6.240	Balancing Fanwheel	6.13
6.250	Cooling Scroll Replacement	6.16A
6.300	Lubrication System	6.18
6.310	Oil Cooler Removal	6.18
6.320	Oil Cooler Installation	6.18
6.400	Induction System	6.18
6.410	Carburetor Removal	6.18
6.420	Air Box Removal	6.19
6.430	Air Box Installation	6.19
6.435	Air Filter Cleaning	6.21
6.440	Carburetor Installation	6.21
6.450	Carburetor Heat Scoop Removal	6.22
6.460	Carburetor Heat Scoop Installation	6.22
6.500	Exhaust System	6.22
6.510	Exhaust System Removal	6.22
6.520	Exhaust System Installation	6.22
6.600	Troubleshooting	6.23

CONTENTS

CHAPTER 6 — POWERPLANT (Continued)

Section	Title	Page
6.610	Low-Power Checklist	6.23
6.700	Throttle Control And Carburetor Heat Assist	6.25
6.710	Overtravel Spring	6.25
6.711	Overtravel Spring Removal	6.25
6.712	Overtravel Spring Installation	6.25
6.720	(Reserved)	
6.730	Throttle Push-Pull Tube Assembly	6.26
6.731	Throttle Push-Pull Tube Assembly Removal	6.26
6.732	Throttle Push-Pull Tube Assembly Installation	6.26
6.740	Carburetor Heat Assist	6.26
6.741	Carburetor Heat Control Cable Removal	6.26
6.742	Carburetor Heat Control Cable Installation	6.27
6.743	D334-5 Carburetor Heat Assist Bellcrank Removal	6.27
6.744	D334-5 Carburetor Heat Assist Bellcrank Installation	6.27
6.745	D334-5 Bellcrank Friction Adjustment	6.29

CHAPTER 7 — DRIVE TRAIN

Section	Title	Page
7.000	Drive Train	7.1
7.001	Introduction	7.1
7.002	Description	7.1
7.100	Main Rotor Gearbox	7.1
7.110	Main Rotor Gearbox Removal	7.1
7.120	Main Rotor Gearbox Installation	7.3
7.130	Leveling Main Rotor Gearbox	7.5
7.140	A006-5/A908-4 Yoke Removal and Installation	7.7
7.141	Setting Hall Effect Sender Gap	7.7
7.150	Replacement of Main Rotor Gearbox Pinion Seal	7.7
7.155	Replacement of Main Rotor Gearbox Sump O-Ring	7.9
7.160	Main Rotor Gearbox Overtemp Inspection	7.9A
7.170	Main Rotor Gearbox Chip Light Indicator	7.9B
7.180	(Reserved)	
7.200	Clutch Assembly	7.10
7.210	Clutch Assembly Removal	7.10
7.211	A184 Bearing Removal	7.12
7.212	A184 Bearing Installation	7.14
7.213	Clutch Assembly Seal Replacement	7.15
7.214	Clutch Assembly Lubricant Inspection and Servicing	7.16
7.220	Clutch Assembly Installation	7.19
7.230	Clutch Sheave Alignment	7.22
7.240	Clutch Shaft Angle	7.24
7.250	Lateral Clutch Centering	7.24
7.260	A907 Yoke Removal and Installation	7.26
7.270	A195 Yoke Removal and Installation	7.26
7.280	V-Belts	7.27

CONTENTS

CHAPTER 7 — DRIVE TRAIN (Continued)

Section	Title	Page
7.281	V-Belt Removal	7.27
7.282	V-Belt Installation	7.31
7.290	A007 Fanshaft and Bearing Assembly, Starter Ring Gear Support, Lower Sheave and Alternator Belt Replacement	7.33A
7.291	Removal	7.33A
7.292	Installation	7.33A
7.300	Tail Rotor Drive Shaft	7.34
7.310	Tail Rotor Drive Shaft Removal	7.34
7.320	Tail Rotor Drive Shaft Installation	7.35
7.321	Adjustment of Damper Friction	7.37
7.330	Intermediate Flex Plate Installation and Shimming	7.40
7.340	Checking Tail Rotor Drive Shaft Runout	7.40
7.350	Two-Piece Tail Rotor Drive Shaft	7.44A
7.360	B224-1 Tail Rotor Drive Shaft Corrosion Removal	7.44D
7.400	Tail Rotor Gearbox	7.45
7.410	Tail Rotor Gearbox Removal	7.45
7.420	Tail Rotor Gearbox Installation	7.45
7.430	Tail Rotor Gearbox Shimming	7.46
7.440	Tail Rotor Gearbox Chip Indicator	7.46
7.450	A021 Tail Rotor Gearbox Output Shaft Seal Replacement	7.47
7.460	B021 Tail Rotor Gearbox Output Shaft Seal Replacement	7.48
7.470	B021 Tail Rotor Gearbox Input Shaft Seal Replacement	7.48B
7.500	Actuator Assembly	7.49
7.510	Actuator Removal	7.49
7.520	Actuator Installation	7.49
7.530	Actuator Motor Replacement	7.49
7.540	Actuator Adjustment	7.50
7.550	Switch and Fuse Replacement	7.53
7.551	Switch Replacement	7.53
7.552	Fuse Replacement	7.53
7.600	Rotor Brake	7.54
7.610	Rotor Brake Removal	7.54
7.620	Rotor Brake Installation	7.54
7.630	Rotor Brake Pad Replacement	7.55

CHAPTER 8 — FLIGHT CONTROLS

Section	Title	Page
8.000	Flight Controls	8.1
8.001	Introduction	8.1
8.002	Description	8.1
8.100	Cyclic Controls	8.1
8.110	Cyclic Assembly	8.1
8.111	Removal of Cyclic Assembly	8.1
8.112	Installation of Cyclic Assembly	8.4
8.120	Cyclic Grip Assembly	8.7

CONTENTS

CHAPTER 8 — FLIGHT CONTROLS (Continued)

Section	Title	Page
8.121	Removal of Cyclic Grip Assembly	8.7
8.122	Installation of Cyclic Grip Assembly	8.8
8.130	Cyclic Lateral (Right) Trim	8.10
8.131	Right Trim Spring Assembly Removal	8.10
8.132	Right Trim Spring Assembly Installation	8.10
8.133	Right Trim Spring Replacement and Shimming	8.11
8.140	Cyclic Longitudinal (Fore-Aft) Elastic Trim Cord	8.15
8.141	Longitudinal Trim Cord Removal	8.19
8.142	Longitudinal Trim Cord Installation	8.19
8.150	Cyclic Friction Assembly	8.20
8.151	Cyclic Friction Adjustment	8.20
8.160	A121-7 Push-Pull Tube	8.21
8.161	A121-7 Push-Pull Tube Removal	8.21
8.162	A121-7 Push-Pull Tube Inspection/Repair	8.21
8.163	A121-7 Push-Pull Tube Sleeve Installation	8.22
8.164	A121-7 Push-Pull Tube Sleeve Inspection	8.22
8.165	A121-7 Push-Pull Tube Installation	8.23
8.200	Collective Control	8.25
8.210	Collective Stick Assembly	8.25
8.211	Collective Stick Removal	8.25
8.212	Collective Stick Installation	8.26
8.220	Collective Spring Assembly	8.30
8.221	Collective Spring Removal	8.30
8.222	Collective Spring Installation	8.32
8.223	Collective Spring Adjustment for A038-1 thru -4 Assembly	8.33
8.224	Collective Spring Adjustment for A038-5 and -6 Assembly	8.34
8.225	Collective Friction Adjustment	8.34
8.230	RPM Governor System	8.34A
8.231	Governor Controller Removal	8.34A
8.232	Governor Controller Installation	8.34A
8.233	Governor Assembly Removal	8.34A
8.234	Governor Assembly Installation	8.34C
8.239	Governor Troubleshooting	8.34C
8.300	Jackshaft and Support Struts	8.35
8.310	Jackshaft	8.35
8.311	Jackshaft Removal	8.35
8.312	Jackshaft Installation	8.35
8.320	Strut Assembly (Jackshaft Support)	8.35
8.321	Strut Removal	8.35
8.322	Strut Installation	8.38
8.400	Swashplate and Main Rotor Pitch Links	8.39
8.410	Swashplate	8.39
8.411	Swashplate Removal	8.39
8.412	Swashplate Installation	8.40
8.413	(Reserved)	
8.414	(Reserved)	

CONTENTS

CHAPTER 8 — FLIGHT CONTROLS (Continued)

Section	Title	Page
	8.415 (Reserved)	
	8.416 Shimming Upper (Unflanged) Spherical Sleeve with Aluminum Ball	8.48
8.500	Tail Rotor Controls	8.48
8.510	Tail Rotor Pedals	8.48
	8.511 Tail Rotor Pedal Removal	8.48
	8.512 Tail Rotor Pedal Installation	8.52
8.520	A317-1 Lower Bellcrank	8.52
	8.521 A317-1 Lower Forward Bellcrank Removal	8.52
	8.522 A317-1 Lower Forward Bellcrank Installation	8.53
8.530	A316-1 Upper Bellcrank	8.55
	8.531 Bellcrank Removal	8.55
	8.532 Bellcrank Installation	8.55
8.540	A331-4 Intermediate Bellcrank	8.56
	8.541 Bellcrank Removal	8.56
	8.542 Bellcrank Installation	8.57
8.550	A120-3 Aft Bellcrank	8.57
	8.551 Bellcrank Removal	8.57
	8.552 Bellcrank Installation	8.57
8.560	A031-1 Pitch Control	8.57
	8.561 Pitch Control Removal	8.57
	8.562 Pitch Control Installation	8.57
8.570	Tail Rotor Pitch Links	8.58
	8.571 Tail Rotor Pitch Link Removal	8.58
	8.572 Tail Rotor Pitch Link Installation	8.58
8.600	A203 Yoke and A205 Fork Assemblies	8.60
8.610	Bearing Removal	8.60
	8.615 C648-2 Bearing Installation	8.60
8.620	A139-1 Bearing Installation	8.60
8.630	B115-1 Bearing Installation	8.62
8.640	Yoke and Fork Assembly Installation	8.63

CHAPTER 9 — ROTOR SYSTEMS

Section	Title	Page
9.000	Rotor Systems	9.1
9.100	Main Rotor	9.1
9.110	Main Rotor Blades	9.1
	9.111 Main Rotor Blade Removal	9.1
	9.112 Main Rotor Blade Installation	9.4
	9.113 Boot Removal	9.5
	9.114 Boot Installation	9.5
	9.115 Filling Pitch Bearing Housing	9.7
	9.116 Drilling Main Rotor Hub Bolts	9.7
9.120	Main Rotor Hub	9.8
	9.121 Main Rotor Hub Removal	9.8
	9.122 Main Rotor Hub Installation	9.8

CONTENTS

CHAPTER 9 — ROTOR SYSTEMS (Continued)

Section	Title	Page
9.123	Main Rotor Hub Journal and Shim Calculations	9.11
9.124	Adjustment of Hinge Friction	9.14
9.125	Shifting the Main Rotor Hub	9.14
9.126	Main Rotor Hub Bearing Replacement	9.15
9.130	Inspection of Main Rotor Blades	9.17
9.131	Scratches and Corrosion on Blade Skins and Doublers	9.17
9.132	Dents and Local Deformations	9.19
9.133	Root Fitting Damage	9.21
9.134	Voids	9.23
9.140	Repair of Main Rotor Blades	9.25
9.141	Trimming	9.26A
9.142	Painting	9.26A
9.200	Tail Rotor	9.26C
9.210	Tail Rotor Assembly Removal	9.26C
9.212	Tail Rotor Installation with Spherical Teeter Bearings	9.27
9.213	Tail Rotor Installation with Elastomeric Teeter Bearings	9.30
9.214	Tail Rotor Hub Spherical Bearing Replacement	9.32A
9.215	Tail Rotor Hub Elastomeric Bearing Replacement	9.32B
9.220	Inspection and Repair of Tail Rotor Blades	9.33

CHAPTER 10 — RIGGING, TRACK AND BALANCE

Section	Title	Page
10.000	Rigging, Track and Balance	10.1
10.001	Introduction	10.1
10.002	Rod End Adjustment Procedure for Rigging	10.1
10.100	Rigging	10.2
10.110	Main Rotor Flight Controls	10.2
10.111	Cyclic Controls	10.2
10.112	Swashplate	10.3
10.113	Collective Control	10.3
10.120	Main Rotor	10.3
10.121	Cyclic Travel Rigging	10.8
10.122	Collective Travel Rigging	10.11
10.130	Tail Rotor Flight Controls	10.12
10.131	Pedals	10.12
10.132	A316 Bellcrank	10.12
10.133	A331 Bellcrank	10.12
10.134	A120-1 Bellcrank	10.15
10.135	Tail Rotor Pitch Links	10.15
10.140	Tail Rotor Rigging	10.15
10.150	Throttle Correlation Rigging	10.19
10.200	Track and Balance	10.21
10.210	Equipment Requirements	10.21
10.220	Equipment Installation	10.22
10.221	Main Rotor Equipment Installation	10.22

CONTENTS

CHAPTER 10 — RIGGING, TRACK AND BALANCE (Continued)

Section	Title	Page
10.222	Tail Rotor Equipment Installation	10.23
10.230	Main Rotor Track and Balance Procedure	10.27
10.231	Main Rotor Balance Adjustments	10.28
10.232	Main Rotor Pitch Link Adjustment	10.28
10.233	Main Rotor Trim Tab Adjustment	10.31
10.234	Main Rotor Track and Balance Trouble Shooting	10.33
10.240	Tail Rotor Balance Procedure	10.35
10.250	Autorotational RPM Adjustment	10.38

CHAPTER 11 — HEATING AND VENTILATION

Section	Title	Page
11.000	Heating and Ventilation	11.1
11.001	Introduction	11.1
11.002	Description	11.1
11.100	Cabin Heater	11.1
11.110	Cabin Heater Removal	11.1
11.120	Cabin Heater Installation	11.2
11.200	Ventilation	11.4
11.210	Cabin Air Vent Removal	11.4
11.220	Cabin Air Vent Installation	11.6
11.230	Door Vent	11.6

CHAPTER 12 — FUEL SYSTEM

Section	Title	Page
12.000	Description	12.1
12.100	Fuel Tanks	12.3
12.110	Main Tank	12.3
12.120	Auxiliary Tank	12.7
12.200	Fuel Vents	12.11
12.210	(Vent Line) Rollover Valve Assemblies	12.11
12.300	Drain Valves	12.11
12.400	Fuel Quantity	12.13
12.410	Fuel Quantity Senders	12.13
12.420	Fuel Quantity Indication	12.14
12.430	Low-Fuel Switch Assembly	12.15
12.500	Gascolator Assembly	12.16
12.600	Minimum Fuel Flow Check	12.17

CHAPTER 13 — INSTRUMENTS

Section	Title	Page
13.000	Description	13.1
13.100	Pitot-Static System	13.3
13.200	Primary Instruments	13.4

CONTENTS

CHAPTER 13 — INSTRUMENTS (Continued)

Section	Title	Page
13.210	Vertical Speed Indicator	13.4
13.220	Airspeed Indicator	13.4
13.230	Engine and Rotor Dual Tachometer	13.4
13.240	Altimeter	13.4
13.250	Manifold Pressure Gage	13.5
13.260	Magnetic Compass	13.5
13.300	Engine Gages	13.5
13.310	Ammeter	13.5
13.320	Engine Oil Pressure Gage	13.5
13.330	Engine Oil Temperature Gage	13.5
13.340	Cylinder Head Temperature Gage	13.5
13.350	Fuel Quantity Gages	13.6
13.360	Carburetor Air Temperature Gage	13.6
13.400	Additional Standard Indicating Equipment	13.6
13.410	Clock	13.6
13.420	Outside Air Temperature (OAT) Gage/Voltmeter	13.6
13.430	Hourmeter	13.6
13.500	Optional Equipment	13.9
13.510	Aspen PFD Installation	13.9
13.600	Instrument Markings	13.11
13.700	Troubleshooting	13.11

CHAPTER 14 — ELECTRICAL AND AVIONICS SYSTEMS

Section	Title	Page
14.000	Electrical and Avionics Systems	14.1
14.001	Introduction	14.1
14.002	Description	14.1
14.100	Dual Tachometer Adjustment	14.2
14.200	Low RPM Horn Adjustment	14.3
14.300	Alternator Output Voltage Adjustment without A942-1	14.3
14.400	Troubleshooting	14.3
14.405	A569 Low Rotor RPM Warning Unit	14.3
14.410	Electrical Troubleshooting	14.4
14.420	Instrument Troubleshooting	14.6
14.430	Clutch Actuator Troubleshooting	14.7
14.440	Electrically-Powered Instrument Calibration Values	14.8
14.500	Electrical Load Analysis	14.11
14.600	Electrical Systems Schematics	14.12
14.700	Antenna Locations	14.24A
14.800	Avionics Schematics	14.25
14.900	Upper Console Harness Plugs	14.41
14.1000	IFR Trainer	14.43
14.1010	IFR Trainer Component Loads	14.43
14.1020	IFR Trainer Console Access	14.45
14.1030	IFR Trainer Component Location	14.46

CONTENTS

CHAPTER 14 — ELECTRICAL AND AVIONICS SYSTEMS (Continued)

Section	Title	Page
14.1040	IFR Trainer Avionics Schematics	14.47
14.1100	R22 Mariner Avionics Schematics	14.60
14.1200	Avionics for R22 Helicopter S/N 4591, 4650, 4651, 4656 & Subsequent	14.67
14.1210	A024-9 Electrical System Installation	14.67
14.1220	A036-9 Electrical Components Installation	14.67
14.1230	A804-12 Transponder (Garmin GTX 330 ES) Installation	14.71
14.1240	C058-5 Cyclic Grip Assembly	14.75
14.1250	C800-1 Aspen PFD Installation	14.75
14.1260	C802-2 COM Radio (Garmin GTR 225B) Installation	14.77
14.1270	C822-1 Audio Control (Garmin GMA 350H) Installation	14.81
14.1280	C831 GPS (Garmin GTN 600 series) Installation	14.85

CHAPTER 15 — FURNISHINGS

Section	Title	Page
15.000	Furnishings	15.1
15.001	Introduction	15.1
15.002	Description	15.1
15.100	Seat Belt	15.1
15.110	Seat Belt Removal	15.1
15.120	Seat Belt Installation	15.1
15.200	Seat Assembly	15.3
15.210	Seat Bottom Assembly Removal and Installation	15.3
15.220	Seat Back Assembly Removal and Installation	15.3
15.300	Carpet	15.4
15.310	Carpet Removal	15.4
15.320	Carpet Installation	15.5
15.400	Foam Installation	15.5
15.410	Foam Removal	15.5
15.420	Foam Installation	15.5
15.500	Map Holder Pocket	15.6
15.510	Map Holder Removal	15.6
15.520	Map Holder Installation	15.6
15.600	Fire Extinguisher	15.6
15.610	Fire Extinguisher Holder Removal	15.6
15.620	Fire Extinguisher Holder Installation	15.7
15.700	License Holder	15.7
15.710	License Holder Removal	15.7
15.720	License Holder Installation	15.7
15.800	Operator's Manual Strap	15.8
15.810	Strap Removal	15.8
15.820	Strap Installation	15.8

CONTENTS

CHAPTER 16 — SPECIAL TOOLS

Section	Title	Page
16.100	Special Tools	16.1
16.200	Illustrations and Tasks	16.3

CHAPTER 17 — REVISION LOG

Section	Title	Page
17.100	Revision Log	17.1

CHAPTER 1

GENERAL

Section	Title	Page
1.000	Introduction	1.1
1.001	R22 Maintenance Manual Revisions	1.1
1.002	R22 Maintenance Authorization	1.1
1.003	R22 Component Overhaul Authorization	1.1
1.004	Maintenance Record	1.2
1.005	Notations	1.2
1.006	Definitions and Abbreviations	1.3
1.007	Service Directory	1.4
1.008	External Dimensions	1.5
1.009	Version Description	1.8
1.100	Helicopter Servicing	1.11
1.101	Scheduled Maintenance and Inspections	1.11
1.105	Calibration of Tools	1.11
1.110	Lubrication – General	1.11
1.115	Chip Detector Cleaning	1.12
1.120	Main Rotor Gearbox Drain and Flush	1.13
1.130	Tail Rotor Gearbox Drain and Flush	1.14
1.140	A184 Upper Bearing Lubrication	1.15
1.150	Defueling	1.15A
1.160	Storage (Greater than 30 days)	1.15B
1.200	Handling, Jacking, Hoisting, Leveling, and Weighing	1.15D
1.210	Ground Handling	1.15D
1.211	Ground Handling Wheels Installation	1.15D
1.212	Ground Handling Wheels Installation – Float Ship Landing Gear	1.16
1.213	Moving the Helicopter on Ground Handling Wheels	1.18
1.214	Main Rotor Blade Tie-Downs	1.18
1.215	Parking	1.20
1.216	Trailering	1.20
1.220	Jacking, Hoisting, and Leveling	1.21
1.230	Weighing and CG Calculation	1.25
1.231	Preparing Helicopter for Weighing	1.25
1.232	Weighing Procedure and Calculations	1.25
1.240	Ballast Installation	1.29
1.300	Fastener Torque Requirements	1.31

CHAPTER 1

GENERAL

Section	Title	Page
1.310	General	1.31
1.311	Torque Seal	1.32
1.320	Standard Torques	1.33
1.330	Special Torques	1.34
1.400	Approved Materials	1.38
1.410	Paint Strippers	1.38
1.420	Solvents and Cleaners	1.38
1.430	Fillers and Putty	1.39
1.440	Torque Seal	1.39
1.450	Primers	1.39
1.455	Powder Coat	1.39
1.460	Paints	1.41
1.470	Lubricants	1.43
1.480	Adhesives and Sealants	1.44
1.490	Storage Limits	1.44B
1.500	Part Interchangeability	1.45
1.600	Instructions for Uncrating, Reassembling, and Flight Testing R22 Series Helicopters	1.46
1.700	Replacement Component Identification (Data) Plates	1.48

CHAPTER 1

GENERAL

1.000 Introduction

The R22 Maintenance Manual contains instructions necessary for proper maintenance, servicing, and handling of R22-series helicopters certificated on U.S. FAA Type Certificate H10WE. The R22 Instructions for Continued Airworthiness (ICA) includes the R22 Maintenance Manual (MM), R22 Illustrated Parts Catalog (IPC), R22 Pilot's Operating Handbook (POH), R22 Service Bulletins (SBs), R22 Service Letters (SLs), Lycoming O-320-series and O-360-series Operator's Manuals, applicable Lycoming technical publications, and applicable component manufacturer technical publications.

Service Bulletins are issued by Robinson Helicopter Company (RHC), Lycoming, and component manufacturers. Service Bulletin compliance is mandatory. RHC technical publications are available on our website, www.robinsonheli.com, under the Publications tab. Recent technical publications are available from Lycoming at www.lycoming.com, and from Teledyne Continental Motors (TCM) at www.tcmlink.com.

CAUTION

Always read instructions completely before performing a task.

1.001 R22 Maintenance Manual Revisions

Before using the R22 Maintenance Manual, verify it consists of effective pages. The list of effective pages is located in the Revision Log in Chapter 17. When a new manual is purchased, complete and submit the Subscription Order and Renewal Form located in the *Introduction*. Subscription owners receive publication revisions for a one-year period. Renew subscriptions annually. The revision status for all RHC technical publications is available on our website, www.robinsonheli.com, under the Publications tab.

1.002 R22 Maintenance Authorization

Only appropriately certificated mechanics who have successfully completed an R22 factory-sponsored maintenance course, or are under direct supervision of the above-stated mechanic, may perform maintenance, repairs, or inspections on R22-series helicopters. Annual inspections of U.S.-registered light helicopters must be performed by holders of an Inspection Authorization (IA) or by repair stations certificated by the Federal Aviation Administration (FAA). The daily preflight and some preventive maintenance may be performed by the above-stated mechanics, or by the pilot/owner after receiving appropriate instruction in accordance with the R22 Pilot's Operating Handbook and applicable aviation regulations.

1.003 R22 Component Overhaul Authorization

Only appropriately certificated mechanics who have successfully completed an R22 factory-sponsored component overhaul course, and who possess special tools and technical data supplied by RHC, are authorized to disassemble and overhaul or repair specific components.

1.004 Maintenance Record

The Airframe Maintenance Record is available online at www.robinsonheli.com, under the Publications tab.

Airframe Maintenance Record blank PDF forms may be used for R22-series, R44-series, and R66 Turbine helicopters. Component Record blank PDF forms may be used for life-limited or TBO components. Blank paper copies are available for purchase.

A Component Record is a maintenance record of the removals, installations, or maintenance performed on a life-limited or TBO component. When a life-limited or TBO component is installed in the helicopter, the Component Record card is inserted in the Airframe Maintenance Record. When a life-limited or TBO component is removed from the helicopter, remove the Component Record card and keep the card with the Component. Major assemblies may contain one or more life-limited or TBO component.

RHC encourages operators to utilize Component Record cards to assist in tracking time on interchangeable parts since service lives may be different between models.

RHC does not create Component Record cards for spares, however, operators may create their own.

RHC's Repair Station does not require a Component Record card in order to perform work on a component, unlike a Component/Return Authorization form. If RHC's Repair Station performs work on a component and the Component Record card is present, the Repair Station will date and make an entry on the card.

RHC recommends using a toner-based laser, or a pigment-based inkjet, color printer and 65 lb white (96 bright) premium card stock for Maintenance Record or Component Record card production. Maintenance Record binders and tab sets are available separately.

1.005 Notations

The following notations will be found throughout the manual:

NOTE

A NOTE provides emphasis or supplementary explanation.

CAUTION

Equipment damage can result if a **CAUTION** is not followed.

WARNING

Personal injury or death can result if a WARNING is not followed.

1.006 Definitions and Abbreviations

Refer to R22 Pilot's Operating Handbook (POH) Section 1, as applicable, for additional definitions and abbreviations.

A. Definitions

14 CFR § 27.602 Critical Part:	A part identified as a 14 CFR § 27.602 critical part within this manual is subject to special inspection requirements. RHC Technical Support must be notified whenever the part fails to meet the special inspection requirements.
12 years:	With respect to a 12 year inspection or life-limit, 12 years means 12 years from the date of the factory-issued airworthiness certificate or factory-issued authorized release certificate (FAA Form 8130-3, Airworthiness Approval Tag).
Annually:	With respect to an annual inspection, annually means within the preceding 12 calendar months.
Datum:	An imaginary vertical plane from which all horizontal measurements are taken for balance purposes with the aircraft in level flight attitude.
Empty Weight:	Empty Weight includes the weight of the airframe, powerplant, required and installed equipment, fixed ballast, unusable fuel, and gearbox oil. Refer to R22-series Type Certificate Data Sheet (TCDS) in Chapter 3. Refer to Equipment List/Weight and Balance Data Sheet (RF 134) and Weight and Balance Record in R22 POH Section 6, as applicable, for installed equipment.
Life-Limited Part:	Refer to Chapter 3. Any part for which a mandatory replacement limit is specified in the type design, the Instructions for Continued Airworthiness, or the maintenance manual.
Time in Service:	With respect to maintenance time records, time in service means the time from the moment an aircraft leaves the surface of the earth until it touches it at the next point of landing.

1.006 Definitions and Abbreviations (continued)

B. Abbreviations

14 CFR:	Title 14 of the Code of Federal Regulations. The Federal Aviation Regulations (FARs) are part of the CFR.
AOG:	Aircraft on Ground
ATA-100:	Air Transport Association of America Specification No. 100
BL:	Butt Line Station locations
CO:	Carbon Monoxide
CRA:	Component Return/Authorization
ELT:	Emergency Locator Transmitter
FS:	Fuselage Station locations
HID:	High Intensity Discharge
LBL:	Left Butt Line Station locations
LED:	Light Emitting Diode
MRDS:	Main Rotor Drive Shaft
MRGB:	Main Rotor Gearbox
OEM:	Original Equipment Manufacturer
R22 IPC:	R22 Illustrated Parts Catalog
R22 MM:	R22 Maintenance Manual
R22 POH:	R22 Pilot's Operating Handbook
RHC:	Robinson Helicopter Company
RS:	Rotor Station
SB:	Service Bulletin
SL:	Service Letter
TBO:	Time Between Overhaul
TCDS:	Type Certificate Data Sheet
TRDS:	Tail Rotor Drive Shaft
TRGB:	Tail Rotor Gearbox
TS:	Tailcone Station locations
TSN:	Time Since New
TSO:	Time Since Overhaul
WL:	Water Line Station locations

1.007 Service Directory

Please visit www.robinsonheli.com and click on the Customer Support tab for a complete service directory.

Procure parts from any R22 Dealer or Service Center, or order directly from assigned RHC Customer Service Representative via email, fax, or phone.

1.008 External Dimensions

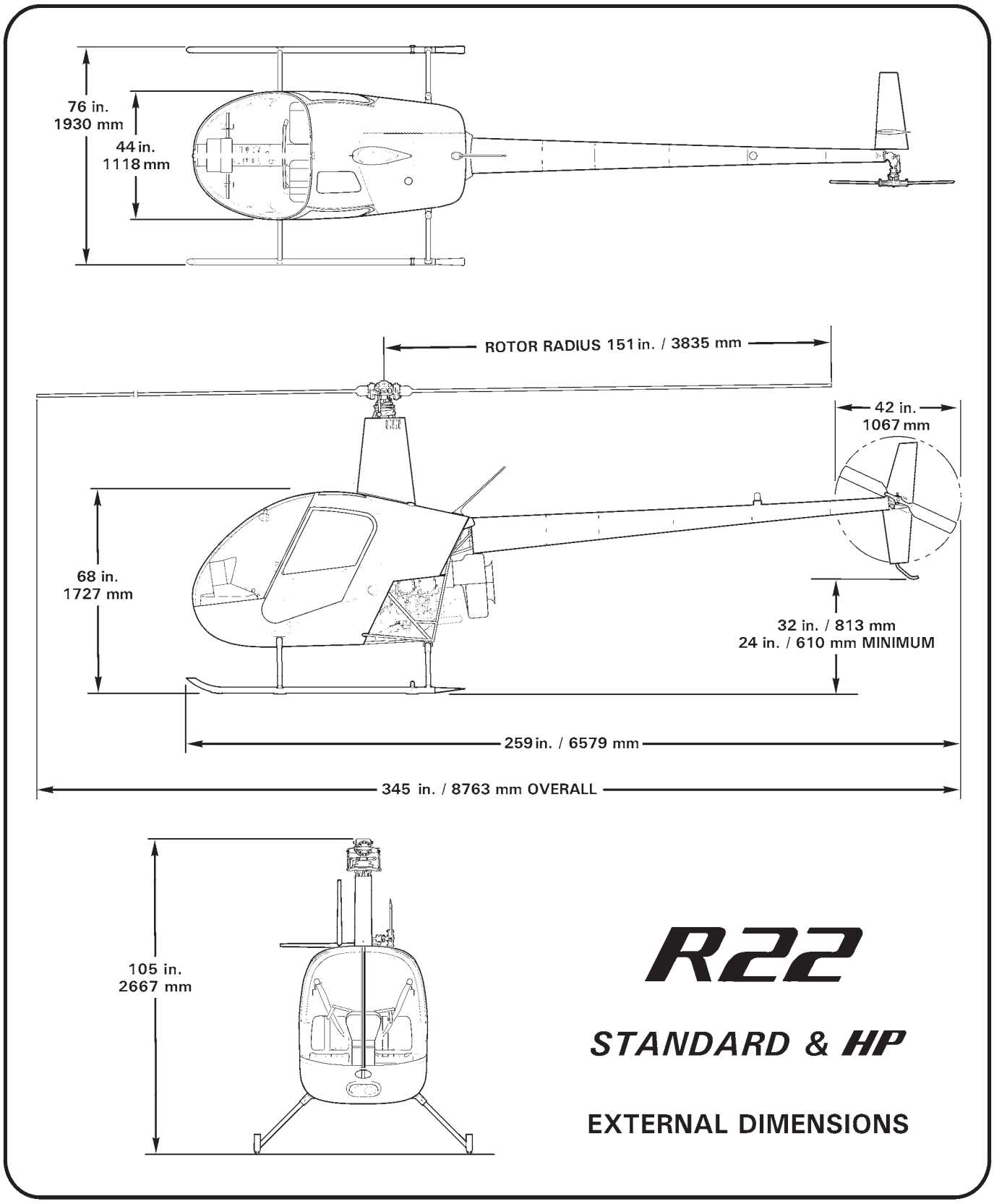

FIGURE 1-1 EXTERNAL DIMENSIONS

1.008 External Dimensions (continued)

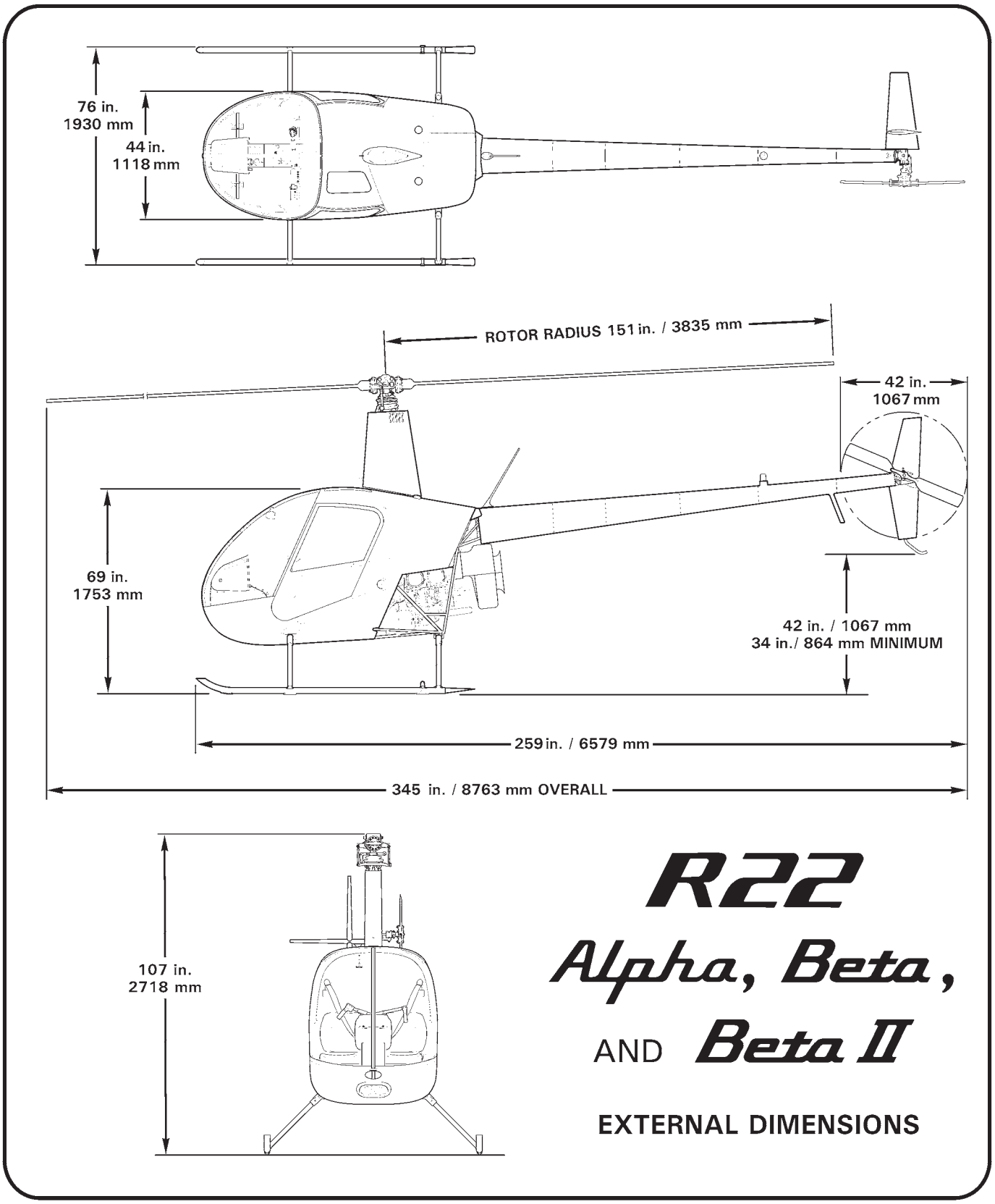

FIGURE 1-1A EXTERNAL DIMENSIONS

1.008 External Dimensions (continued)

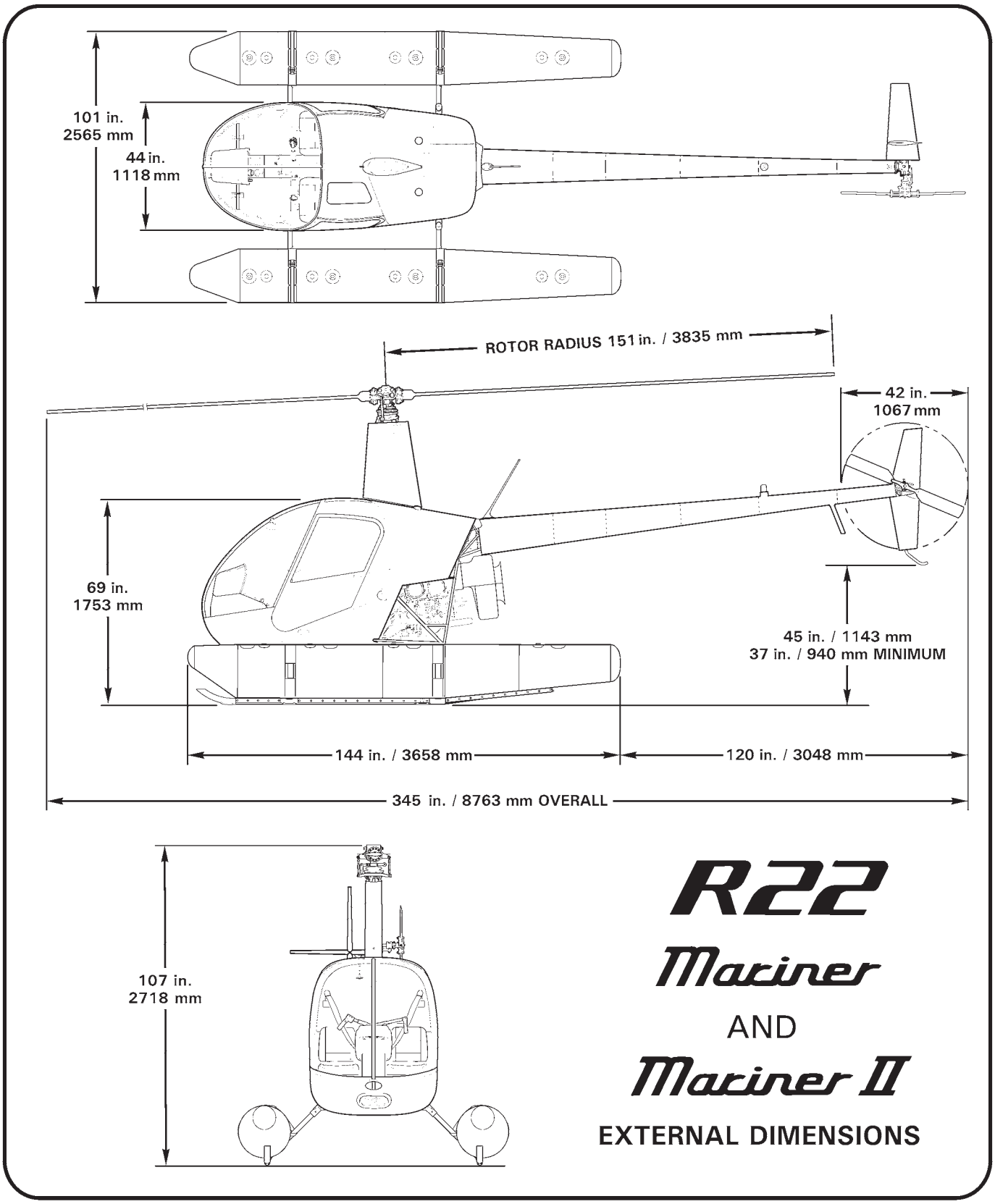

FIGURE 1-1B EXTERNAL DIMENSIONS

1.009 Version Description

Refer to § 3.200 for Type Certificate Data Sheet.

WARNING

Refer to R22 Illustrated Parts Catalog (IPC) for specific part number differences between versions.

R22 Standard: Approved March 16, 1979. Serial numbers 0002 thru 0199, except 0175. Lycoming O-320-A2B or Lycoming O-320-A2C engine normally rated at 150 horsepower and derated to 124 horsepower. 80/87 minimum grade aviation gasoline. Gross weight 1300 pounds. Stabilizer angle 1.8–2.3 degrees nose up.

R22 HP: Serial numbers 0175, 0200 thru 0255, 0257 thru 0300, 0302 thru 0349, 0352 thru 0356. Lycoming O-320-B2C engine normally rated at 160 horsepower and derated to 124 horsepower. 100LL or 91/96 minimum grade aviation gasoline. Gross weight 1300 pounds. Stabilizer angle 1.8–2.3 degrees nose up.

R22 Alpha: Approved October 12, 1983. Serial numbers 0256, 0301, 0350, 0351, 0357 thru 0500. Lycoming O-320-B2C engine derated to 124 horsepower. Extended lower steel frames. Tailcone higher than Standard/HP. Aft battery installation. Gross weight 1370 pounds. Stabilizer angle 2.8 –3.3 degrees nose down. Auxiliary fuel tank optional for serial numbers 0457 and subsequent.

R22 Beta: Approved August 12, 1985. Serial numbers 0501 thru 2570. Lycoming O-320-B2C engine derated to 124 horsepower. 131 horsepower five-minute take off rating. Extended lower steel frames. Higher tailcone than Standard/HP. Aft battery installation. Seven-hole instrument panel. Larger oil cooler. 1370 pounds gross weight. Stabilizer angle 2.8–3.3 degrees nose down. Auxiliary fuel tank optional. A569-5 low-rpm warning unit with starter lockout feature installed in serial number 2115 and subsequent. Starter lockout prevents starter activation at less than 62% rotor rpm when actuator is not fully disengaged; starter may be activated above 69% rotor rpm to allow an in-flight engine start.

R22 Mariner: Approved September 12, 1985. Serial numbers 0364, 0501 thru 2570 eligible (suffix “M” added to ship serial number). Similar to Beta configuration except includes utility floats and additional corrosion protection. Different tailcone with 1.8–2.3 degrees nose-up horizontal stabilizer angle. Battery in nose when floats installed. Float stabilizer on lower vertical stabilizer in place of tail skid. May be flown without floats VFR day or night. Day VFR flight only with floats installed. Auxiliary fuel tank optional. Marine radio package optional.

Instrument Trainer: Alpha, Beta, or Beta II configuration with 10-hole instrument panel. VMC operations only.

Police Helicopter: Alpha, Beta, or Beta II configuration with searchlight, police radio package, and 70 amp alternator.

1.009 Version Description (continued)

R22 Beta II: Approved January 31, 1996. Serial numbers 2571 and subsequent. Lycoming O-360-J2A engine derated to 124 horsepower maximum continuous power. 131 horsepower 5-minute take-off rating. Carburetor heat assist. 1370 pounds gross weight. Stabilizer angle 2.8–3.3 degrees nose down. Throttle only engine governor standard. A569-5 low-rpm warning unit with starter lockout feature standard. Auxiliary fuel system optional.

R22 Mariner II: Approved January 31, 1996. Serial numbers 2571 thru 3414 eligible (suffix "M" added to ship serial number). Similar to Beta II configuration except includes utility floats and additional corrosion protection. Battery in nose when floats installed. Different tailcone with 1.8–2.3 degrees nose-up horizontal stabilizer angle. Float stabilizer on lower vertical stabilizer in place of tail skid. May be flown without floats VFR day or night. Day VFR flight only with floats installed. Marine radio package optional.

TABLE 1 SCHEDULED MAINTENANCE AND INSPECTIONS	First 10 hours	First 25 hours	First 100 hours	Every 50 hours	Every 100 hours	Every 300 hours	Every 500 hours	Every 800 hours	Every 2200 hours	Every 4 months	Every 12 months	Every 24 months	Every 4 years	Every 12 years
Perform maintenance & inspection per Lycoming Operator's Manual.*	●	●		●	●	●								
Perform **Lycoming SI 1129B** *Methods of Checking DC Alternator and Generator Belt Tension.*		●			●									
Perform **Lycoming SI 1191A** *Cylinder Compression.*					●									
Perform **Lycoming SI 1080C** *Maintenance Items for Special Attention.*				●	●									
Perform **Lycoming SB 301B*** *Maintenance Procedures and Service Limitations for Valves.*						●								
Perform **Lycoming SB 366B** *Carburetor Throttle Body Screw Inspection.*					●									
Perform **Lycoming SB 388C** *Procedure to Determine Exhaust Valve and Guide Condition.*			●			●								
Perform **Lycoming SB 480E** *I. Oil & Filter Change & Screen Cleaning / II. Oil Filter/Screen Content Inspection.*		●		●						●				
Perform **TCM SB 643B** *Maintenance Intervals for All TCM & Bendix A/C Magnetos & Related Equipment.*					●		●						●	
Perform **TCM SB 658** *Distributor Gear Maintenance.*							●						●	
Perform **TCM SB 663A** *Two-Wire Magneto Tach. Breaker Contact (Points) Assy. P/N 10-400507.*							●						●	
Perform 100-hour/annual maintenance & inspection per § 2.400.					●						●			
Lubricate A181-4 Revision K, L, and M bearings per § 2.502.						●					●			
Lubricate A181-4 Revision N bearing per § 2.502.								●					●	
Lubricate A184 bearing per § 2.503.						●					●			
Drain and flush gearboxes per §§ 1.120 & 1.130.							●							
Clean gearbox chip detectors per § 1.115.							●				●			
Perform FAA AD 88-26-01 R2.							●							
Overhaul helicopter per § 2.700.									●					
Inspect emergency locator transmitter (ELT) per 14 CFR § 91.207.											●			
Test and inspect transponder per 14 CFR § 91.413.												●		
Perform 12-year maintenance and inspection per § 2.600.														●

* Shorter interval than published on referenced document.

1.100 Helicopter Servicing

1.101 Scheduled Maintenance and Inspections

Required maintenance and inspection intervals are given in Table 1. Some aircraft may require maintenance and inspections in addition to the requirements in Table 1. Consult aircraft maintenance records, Service Bulletins (SBs), aviation regulations, Airworthiness Limitations, and Airworthiness Directives (ADs) for applicability. Publications listed are subject to revision.

Preventive maintenance is required between scheduled inspections. Fluid leaks, discoloration, fretting, galling, chafing, nicks, scratches, dents, cracks, and corrosion all warrant further investigation. Unairworthy items must be replaced or repaired as allowed by RHC.

1.105 Calibration of Tools

Dimensions and tolerances given in this manual are critical. Calibrate measuring tools per manufacturer's recommendations at least once a year, when tool is dropped, misused, or calibration is suspect. Measuring tools include torque wrenches, micrometers, calipers, dial indicators, spring scales, protractors, and balancing equipment.

WARNING

Proper torque is critical. Always use calibrated wrenches and undamaged, properly lubricated (where applicable) hardware. Ensure all clamping surfaces are clean, and clamp only bare metal or wet-primed surfaces. Improper torque or dirty or painted clamping surfaces may result in loss of clamp-up, hardware or part damage, and premature failure.

1.110 Lubrication – General

WARNING

Refer to appropriate Material Safety Data Sheet (MSDS) and take necessary safety precautions when working in proximity to hazardous materials.

Most bearings are sealed or self-lubricated and do not require periodic lubrication. Bearings with scheduled lubrication intervals are listed in Table 1. Engine lubrication requirements are contained in the R22 Pilot's Operating Handbook, the appropriate model Lycoming Operator's Manual, and Lycoming Service Instruction No. 1014 (current revision). Fill main and tail gearboxes to center of sight glasses with A257-2 oil.

WARNING

A257-2 oil is the only approved oil for use in gearboxes.

When a new or overhauled gearbox is installed, it must be drained and the chip detector inspected after the first 4 hours of flight or first chip light, whichever occurs first. Thereafter, change gearbox oil at intervals per § 1.101. Additionally, change gearbox oil and clean sight glass whenever oil becomes so dirty that its level cannot be determined.

1.115 Chip Detector Cleaning

WARNING

Refer to appropriate Material Safety Data Sheet (MSDS) and take necessary safety precautions when working in proximity to hazardous materials.

1. Disconnect chip detector wiring from airframe harness at connectors. For tail gearbox chip detector, place suitable drain container below gearbox. Remove chip detector from housing or gearbox.

2. Clean chip detector using a toothbrush and approved solvent (refer to § 1.420). Remove debris using compressed air or masking tape; do not use a magnet. Dry chip detector using compressed air or a lint-free cloth. Inspect condition.

3. Connect chip detector wiring to airframe harness at connectors. Turn battery on. Touch detector's magnet to airframe and verify appropriate gearbox caution light illuminates. Turn battery off. Disconnect chip detector wiring from airframe harness at connectors.

4. Install chip detector in housing or gearbox. Special torque threaded chip detector per § 1.330. Connect chip detector wiring to airframe harness at connectors.

5. Turn battery on. Depress push-to-test button(s) and verify appropriate gearbox caution light illuminates. Turn battery off.

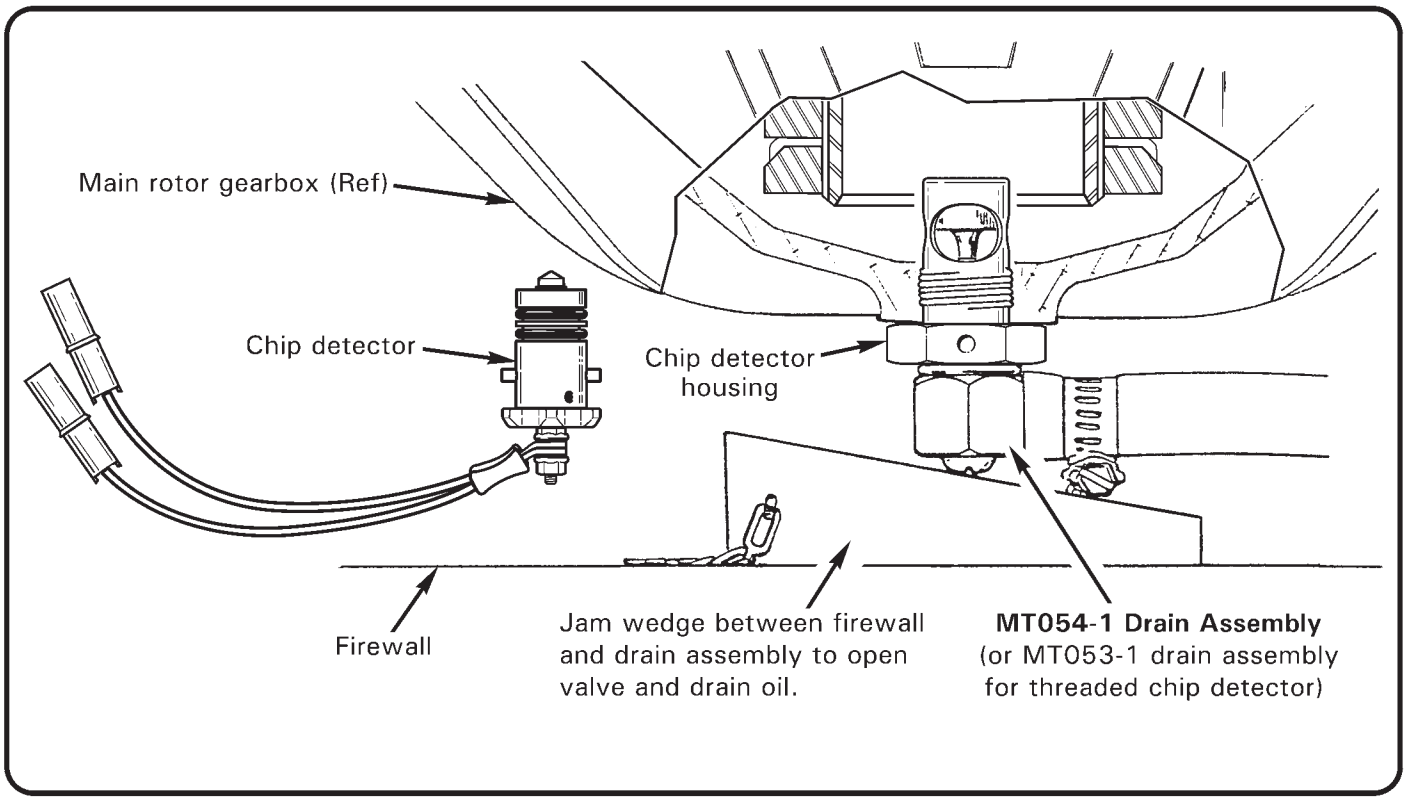

FIGURE 1-2 DRAINING MAIN ROTOR GEARBOX

1.115 Chip Detector Cleaning (continued)

6. As required, remove filler-plug. Fill gearbox to center of sight glass using A257-2 oil. Rotate rotor system by hand for several revolutions and pull down on tail rotor gearbox several times. Check gearbox oil level and adjust as required. Install filler-plug in gearbox and special torque plug per § 1.330.

1.120 Main Rotor Gearbox Drain And Flush

WARNING

Refer to appropriate Material Safety Data Sheet (MSDS) and take necessary safety precautions when working in proximity to hazardous materials.

1. Run-up helicopter for approximately five minutes at 60-70% RPM per R22 Pilot's Operating Handbook (POH) Section 4 as required to warm oil and expedite draining.

2. Disconnect chip detector wiring from airframe harness at connectors. Remove chip detector from housing.

3. Refer to Figure 1-2. Insert MT054-1 drain assembly (or MT053-1 drain assembly for threaded chip detector) into housing. Position drain hose overboard into a suitable drain container. Jam wedge between firewall and drain assembly to open valve and drain oil.

4. Remove drain assembly after oil has drained. Install chip detector (special torque threaded chip detector per § 1.330). Connect chip detector wiring to airframe harness at connectors.

5. Remove filler-plug. Fill gearbox to center of sight glass using SAE30, SAE40, SAE50, or SAE20W50 mineral oil. Install filler-plug and special torque plug per § 1.330.

6. Run-up helicopter for approximately five minutes at 60-70% RPM per POH Section 4.

7. After shutdown, drain mineral oil per steps 2 thru 4. Remove drain assembly after oil has drained.

8. Remove chip detector housing. Clean chip detector and housing using a toothbrush and approved solvent (refer to § 1.420). Remove debris using compressed air or masking tape; do not use a magnet. Dry chip detector and housing using compressed air or a lint-free cloth. Inspect condition.

9. Connect chip detector wiring to airframe harness at connectors. Turn battery on. Touch detector's magnet to firewall and verify MR CHIP caution light illuminates. Turn battery off. Disconnect chip detector wiring from airframe harness at connectors.

10. Install chip detector housing in gearbox and special torque housing per § 1.330. Install chip detector in housing. (Special torque threaded chip detector per § 1.330.) Connect chip detector wiring to airframe harness at connectors.

11. As required, remove sight gage and clean glass using approved solvent (refer to § 1.420). Install sight gage and special torque gage per § 1.330.

1.120 Main Rotor Gearbox Drain And Flush (continued)

12. Remove filler-plug. Fill gearbox to center of sight glass using A257-2 oil. Rotate rotor system by hand for several revolutions and pull down on tail rotor gearbox several times. Check gearbox oil level and adjust as required. Install filler-plug in gearbox and special torque plug per § 1.330.

13. Turn battery on. Depress push-to-test MR CHIP button and verify caution light illuminates. Turn battery off.

1.130 Tail Rotor Gearbox Drain And Flush

WARNING

Refer to appropriate Material Safety Data Sheet (MSDS) and take necessary safety precautions when working in proximity to hazardous materials.

1. Run-up helicopter for approximately five minutes at 60-70% RPM per R22 Pilot's Operating Handbook (POH) Section 4 as required to warm oil and expedite draining.

2. Disconnect chip detector wiring from airframe harness at connectors. Place a suitable drain container below tail rotor gearbox and remove chip detector.

3. Remove filler-plug. Fill gearbox to center of sight glass using SAE30, SAE40, SAE50, or SAE20W50 mineral oil. Install filler-plug and special torque plug per § 1.330.

4. Run-up helicopter for approximately five minutes at 60-70% RPM per POH Section 4.

5. After shutdown, drain mineral oil per step 2.

6. Clean chip detector using a toothbrush and approved solvent (refer to § 1.420). Remove debris using compressed air or masking tape; do not use a magnet. Dry chip detector and housing using compressed air or a lint-free cloth. Inspect condition.

7. Connect chip detector wiring to airframe harness at connectors. Turn battery on. Touch detector's magnet to airframe and verify TR CHIP caution light illuminates. Turn battery off. Disconnect chip detector wiring from airframe harness at connectors.

8. Install chip detector in gearbox and special torque detector per § 1.330. Connect chip detector wiring to airframe harness at connectors.

9. As required, remove sight gage and clean glass using approved solvent (refer to § 1.420). Install sight gage and special torque gage per § 1.330.

10. Remove filler-plug. Fill gearbox to center of sight glass using A257-2 oil. Rotate rotor system by hand for several revolutions and pull down on tail rotor gearbox several times. Check gearbox oil level and adjust as required. Install filler-plug in gearbox and special torque plug per § 1.330.

11. Turn battery on. Depress push-to-test TR CHIP button and verify caution light illuminates. Turn battery off.

1.140 A184 Upper Bearing Lubrication

WARNING

Refer to appropriate Material Safety Data Sheet (MSDS) and take necessary safety precautions when working in proximity to hazardous materials.

NOTE

KI-115 Special Tools Kit (syringe and probe) required to perform the following procedure.

1. Fill syringe with 2-3 grams A257-12 grease (refer to § 1.470). Note: 2.5 grams of grease fills a 0.5 inch (13 mm) long space inside a syringe body with a 0.63 inch (16 mm) inner diameter.

2. Thoroughly clean an accessible portion of A184 bearing assembly aft rubber seal and surrounding surface.

3. Gently press plastic tip of syringe against cleaned seal inner lip until lip deflects inward and tip slips into bearing. Do not damage seal. Inject grease with syringe perpendicular to seal. Withdraw syringe. Part of seal's inner lip remains deflected inward.

4. Slide tip of steel probe under seal inner lip and return deflected portion of lip to original position. Do not damage seal.

5. Run-up helicopter for approximately two minutes 104% RPM per R22 Pilot's Operating Handbook (POH) Section 4. Shut down, inspect bearing, and clean off any escaped grease.

WARNING

Bearing used in A184 bearing assembly has modified internal clearance for use on R22. Do not substitute any other bearing.

1.150 Defueling

WARNING

Refer to appropriate Material Safety Data Sheet (MSDS) and take necessary safety precautions when working in proximity to hazardous materials.

WARNING

Always fuel or defuel helicopter in a well-vented area. No smoking within 100 feet of aircraft during fueling.

1. Turn battery switch and fuel valve off.
2. Place suitable drain container beneath carburetor and ground container to helicopter.
3. Disconnect fuel hose assembly from carburetor.
3. Turn fuel valve on to drain fuel. (Perform low-fuel switch operation check per § 12.430, if desired.)
4. Connect fuel hose assembly to carburetor, special torque hose assembly nut per § 1.330, and torque stripe per Figure 2-1.

1.160 Storage (Greater than 30 days)

1. Record the date helicopter is prepared and placed in storage.

> **CAUTION**
>
> To minimize risk of electrical discharge: when disconnecting battery, disconnect negative (ground) cable from battery first, then the positive cable. When connecting battery, connect positive cable to battery first, then the negative (ground) cable.

2. Turn battery off. Remove cotter rings and wing nuts securing battery box cover to box and remove cover. Remove hardware securing cables to battery. Remove battery. Inspect and service battery according to battery manufacturer's instructions.

3. Preserve engine for storage per Lycoming Service Letter no. L180 (current revision).

4. Fill main and tail gearboxes to center of sight glass with A257-2 oil.

5. Fuel helicopter per R22 Pilot's Operating Handbook (POH) Section 8.

> NOTE
>
> Fuel lubricates bladder inner liner and keeps it from drying out or cracking. Refuel helicopter after run-ups during storage.

6. Clean aircraft per POH Section 8. Verify helicopter is completely dry.

7. Refinish main rotor blades per § 9.142. Refinish tail rotor blades per § 9.220. If blade paint is unavailable, wax blades.

8. Position helicopter in a hangar or protected environment.

9. Apply suitable non-drying corrosion preventive compound to A166 clutch shaft adjacent to seals (where shaft enters and exits upper sheave).

10. Open door vents or remove doors to ventilate cabin as required.

11. Close and latch access doors.

> NOTE
>
> During storage, periodically inspect helicopter for corrosion; helicopters stored in humid environments will require more frequent inspection.

1. Insert spindle into skid-mounted support.

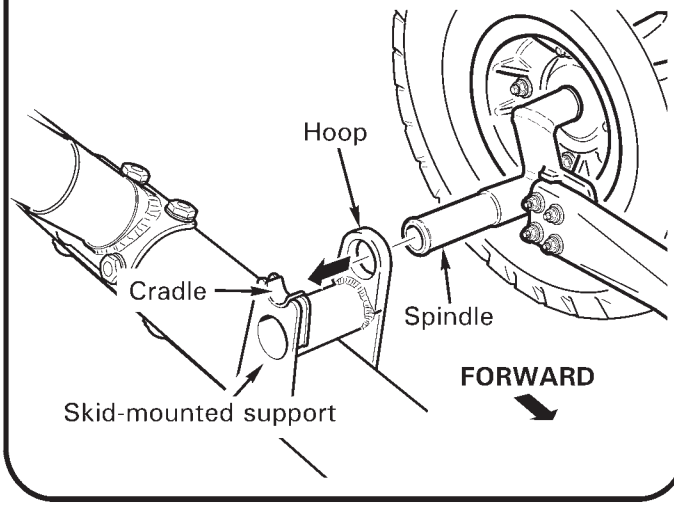

2. Verify flange is inboard of cradle.

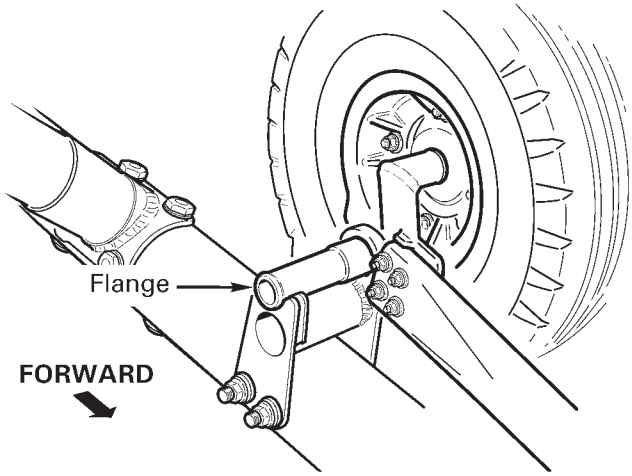

3. Pull handle in rightward arc to raise helicopter.

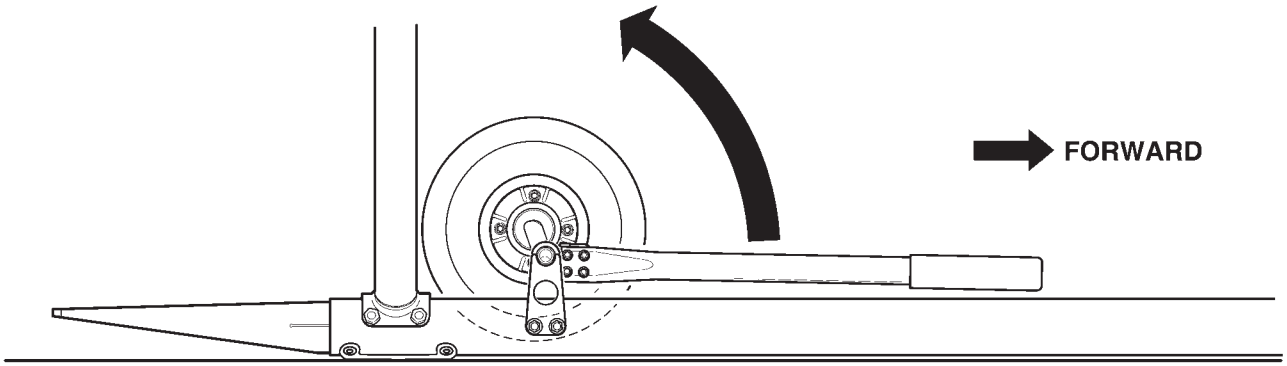

4. Handle is in locked position when parallel with the skid.

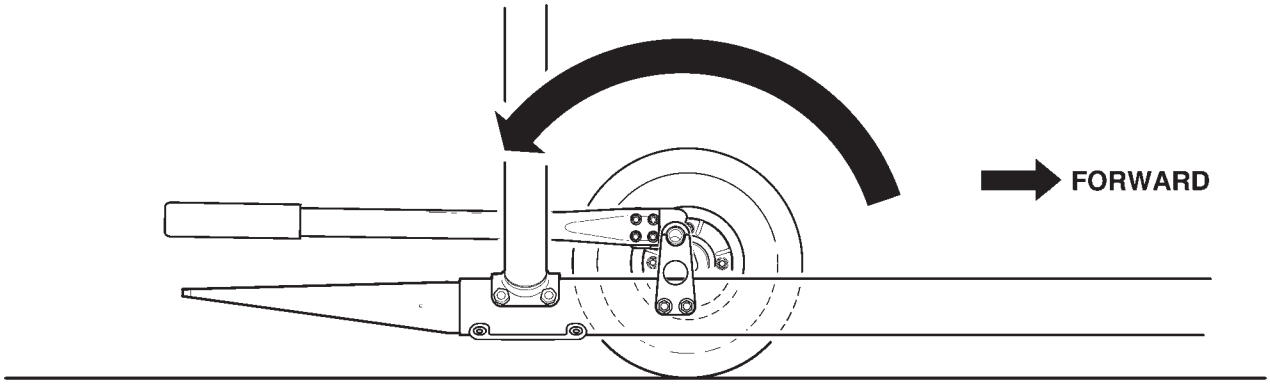

FIGURE 1-3 GROUND HANDLING WHEELS (LEFT SKID SHOWN)

1.200 Handling, Jacking, Hoisting, Leveling, and Weighing

1.210 Ground Handling

1.211 Ground Handling Wheels

Refer to R22 Illustrated Parts Catalog (IPC) Figure 9-1.

> NOTE
>
> R22 ground handling wheels are installed outboard of landing gear skid tubes. A063-1 wheel assemblies are interchangeable (may be installed in right or left skid support). When wheels are installed and in locked position, handle on right skid tube points forward and handle on left skid tube points aft.

> CAUTION
>
> Handle has a tendency to snap over when raising and lowering the helicopter. Grip handle firmly with both hands during operation.

> **CAUTION**
>
> Remain clear of landing gear skid tubes when helicopter is raised.

> **WARNING**
>
> **Remove ground handling wheels for flight.**

A. Installation

> NOTE
>
> Verify proper inflation of ground handling wheel tires. Maximum tire inflation pressure is 70 psi.

1. Refer to Figure 1-3. Hold ground handling wheel assembly outboard of skid with handle left, wheel right, and spindle pointed inboard. Insert spindle completely into skid-mounted support, then pull handle in rightward arc (raises helicopter) until handle is in locked position, parallel with the skid.

2. Repeat step to install second wheel assembly (helicopter will rest on skid toes).

B. Removal

1. Refer to Figure 1-3. Pull ground handling wheel handle in leftward arc (lowers helicopter) until handle is in unlocked position, parallel with the skid. Remove spindle from skid-mounted support and remove wheel assembly.

2. Repeat step to remove second wheel assembly.

1.212 Ground Handling Wheels - Float Landing Gear

INSTALLATION

1. Pull tail down. Insert forward blocks at their lower height under both skids at forward marks.

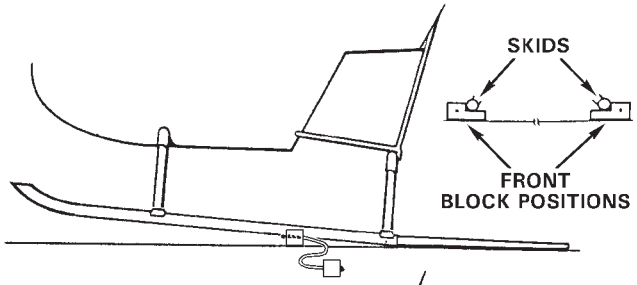

2. Push tail up. Insert rear blocks at their lower height under both skids at rear marks.

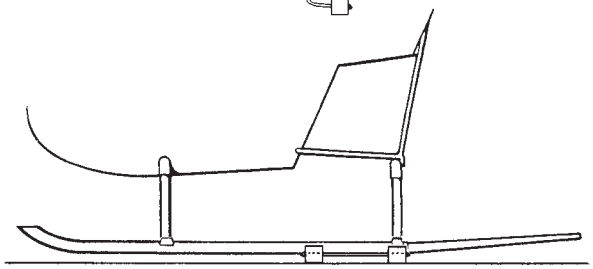

3. Pull tail down. Move forward blocks "inside" to their upper height under skid tubes.

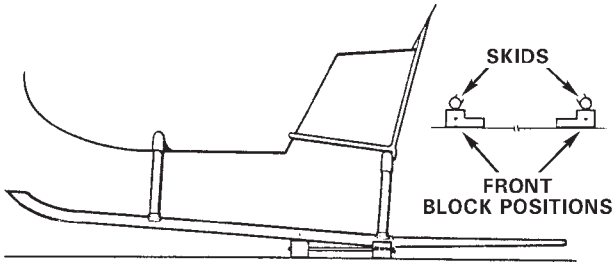

4. Push tail up. Slide rear blocks out (upper height of rear blocks is not used) and insert wheels under skids at rear marks.

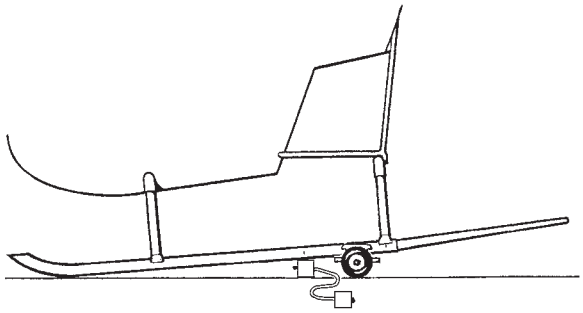

> NOTE
>
> Adjust wheel placement as necessary to reduce force required to pull tail down.

5. Pull tail down and remove forward blocks. Installation is completed.

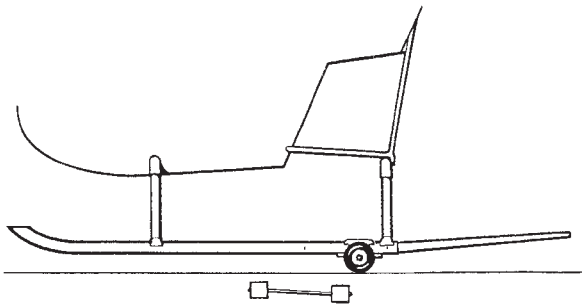

FIGURE 1-4 FLOAT LANDING GEAR GROUND HANDLING WHEELS INSTALLATION

1.210 Ground Handling (cont'd)

1.212 Ground Handling Wheels - Float Landing Gear (cont'd)

REMOVAL:

1. Pull tail down. Insert forward blocks at their upper height at forward marks under skids.

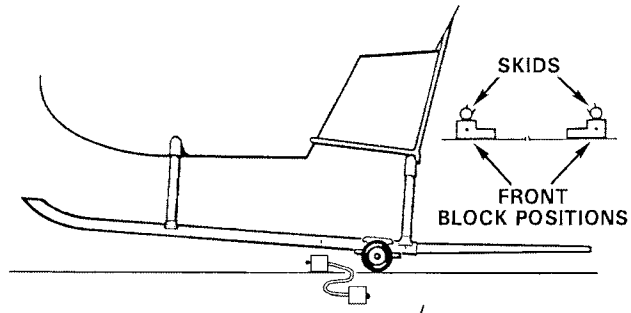

2. Push tail up. Remove wheels and insert rear blocks at their lower height (upper height of rear blocks is not used) at rear marks.

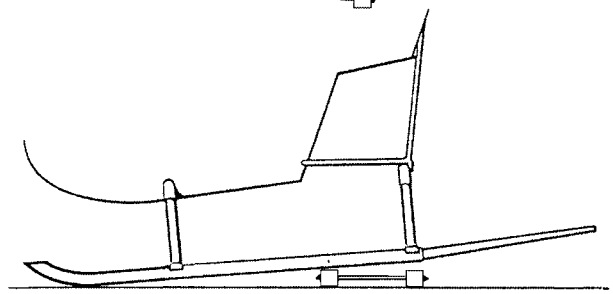

3. Pull tail down. Move forward blocks "outside" to their lower height.

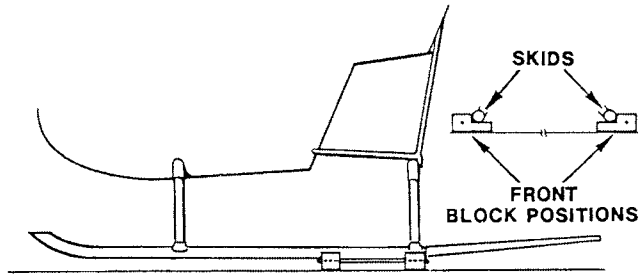

4. Push tail up. Remove rear blocks.

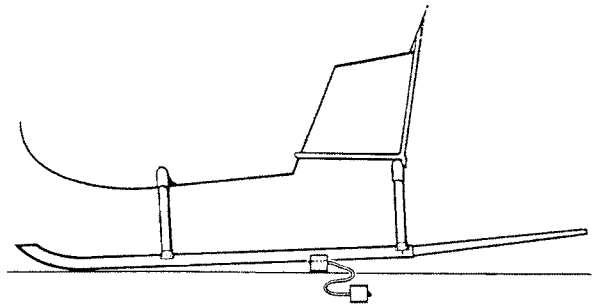

5. Push tail down. Remove front blocks. Removal is completed.

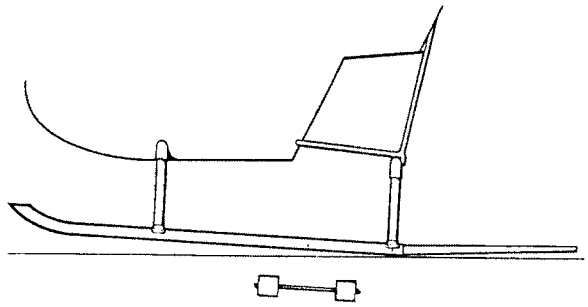

FIGURE 1-4A FLOAT LANDING GEAR GROUND HANDLING WHEELS REMOVAL

1.213 Moving Helicopter on Ground Handling Wheels:

Move helicopter by holding tail rotor gearbox, aft tailcone section, and/or inboard part of horizontal stabilizer (between tailcone and vertical stabilizers).

If additional help is needed, a person may push on steel tube structure or on either side of nose vent.

CAUTION

Do NOT move helicopter by gripping vertical stabilizers, outboard part of horizontal stabilizer, tail rotor controls, or tail skid.

1.214 Main Rotor Blade Tie-Downs

Refer to Figure 1-5. Install forward tie-down first, push up blade to remove slack, then install aft tie-down. Remove slack from straps to prevent blade flapping and rotation.

CAUTION

Overtightening tie-down straps can damage main rotor blades.

1.214 Main Rotor Blade Tie-Downs (cont'd)

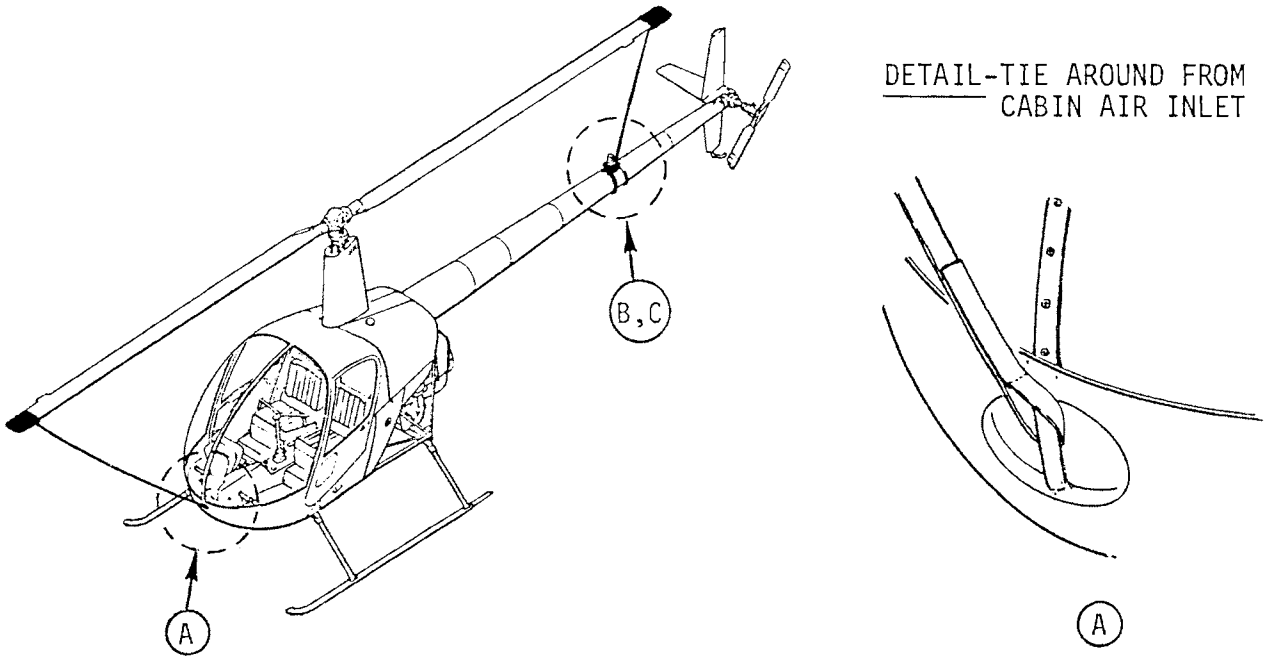

DETAIL-TIE AROUND FROM CABIN AIR INLET

CAUTION

Overtightening tie-down straps can damage main rotor blades.

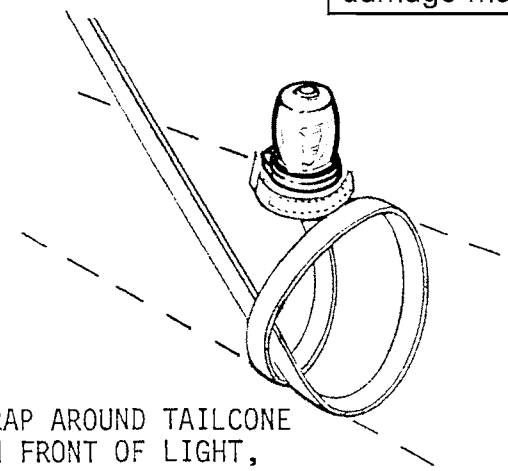

WRAP AROUND TAILCONE IN FRONT OF LIGHT, AROUND TAILCONE TO BACK OF LIGHT THEN WRAP AROUND LIGHT BASE TO ATTACH VELCRO.

B

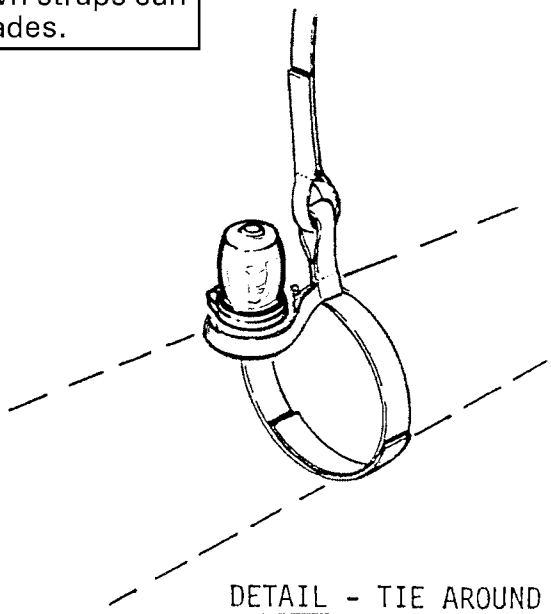

DETAIL - TIE AROUND TAILCONE (ALTERNATE TYPE)

C

FIGURE 1-5 MAIN ROTOR BLADE TIE-DOWNS

1.215 Parking

Refer to Section 8 of R22 Pilot's Operating Handbook for parking procedures.

1.216 Trailering

Trailering R22 is not normally recommended. Most trailers large enough to accommodate the helicopter are designed for much heavier loads; the trailer's springs and shock absorbers will not function properly when lightly-loaded. Also, if the tailcone is not supported, it can resonate with the trailer and be subjected to greatly amplified loads. If trailering is unavoidable, observe the following precautions:

1. Load trailer with ballast until it is at the average weight it is designed to carry.

2. Support tailcone, taking care to prevent chafing or abrasion at support point.

3. Remove main rotor blades. If not practical to remove, support main rotor blades so they will not bear on droop stops. Locate supports about 5 feet in from blade tips. Supports must be cushioned to prevent blade damage.

4. Restrain tail rotor to prevent teetering.

5. Fill fuel tank(s) to prevent fuel level sender arm from pounding stops.

1.220 Jacking, Hoisting, and Leveling

a. Jacking

Jacking the helicopter is accomplished by placing a jack under each end of aft cross tube 1 inch inboard of elbow fittings.

> **CAUTION**
>
> Care must be taken to prevent helicopter from becoming dislodged from jacks after lifting.

b. Hoisting

Hoisting is accomplished using the MT234-1 Helicopter Lifting Fixture per Figure 1-6A or by passing a 3/4 inch diameter soft nylon rope through main rotor hub lightening holes and forming a double loop (Figure 1-6B). Rope should have 1000 lbs minimum tensile strength.

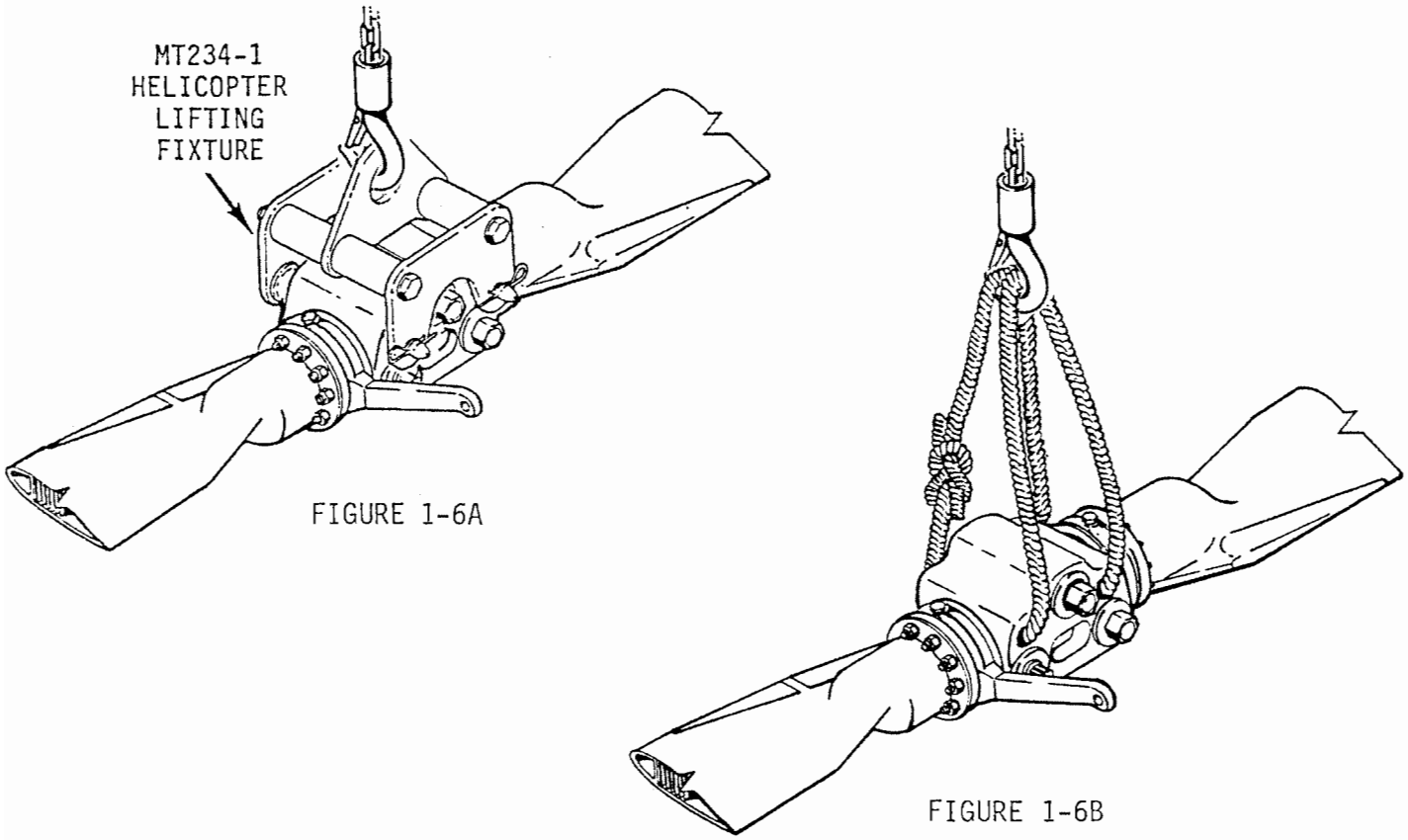

FIGURE 1-6 HELICOPTER HOISTING

1.220 Jacking, Hoisting, and Leveling (cont'd)

c. Leveling

1. Leveling using lower right side frame tube and aft landing gear cross tube (R22 Standard and R22 HP only).

a. Place a bubble level on lower right steel tube frame horizontal member at location marked LEVEL HERE.

b. Level helicopter longitudinally by placing shims under landing gear skid tubes or jacks under outboard edge of aft cross tube.

c. Place bubble level on center of landing gear aft cross tube.

d. Level helicopter laterally by placing shims under landing gear skid tubes or jacks under outboard edge of aft cross tube.

e. Recheck level per steps a & c and adjust as required.

2. Leveling at main rotor hub (all R22 Models).

a. Place a bubble level atop MR hub.

NOTE
Level must be parallel to teeter hinge bolt.

b. Rotate main rotor until teeter hinge bolt is aligned with longitudinal axis of helicopter.

c. Level helicopter longitudinally by placing shims under landing gear skid tubes or jacks under outboard edge of aft cross tube.

d. Rotate main rotor until teeter hinge bolt is aligned with lateral axis of helicopter.

e. Level helicopter laterally by placing shims under landing gear skid tubes or jacks under outboard edge of aft cross tube.

NOTE
Jacks may be used under aft cross tube 1 inch inboard from each elbow.

f. Recheck level per steps b & d and adjust as required.

1.220 Jacking, Hoisting, and Leveling (cont'd)

c. Leveling (cont'd)

3. Leveling using fuselage keel panels (all R22 models).

a. Remove horizontal panel between seat bottoms and remove cyclic box cover.

b. Place a bubble level on top edge of right keel panel per Figure 1-7 detail A.

c. Level helicopter longitudinally by placing shims under landing gear skid tubes or jacks under outboard edge of aft cross tube.

d. Place a bubble level across two keel panels per Figure 1-7 detail B.

e. Level helicopter laterally by placing shims under landing gear skid tubes or jacks under outboard edge of aft cross tube.

f. Recheck level per steps b & d and adjust as required.

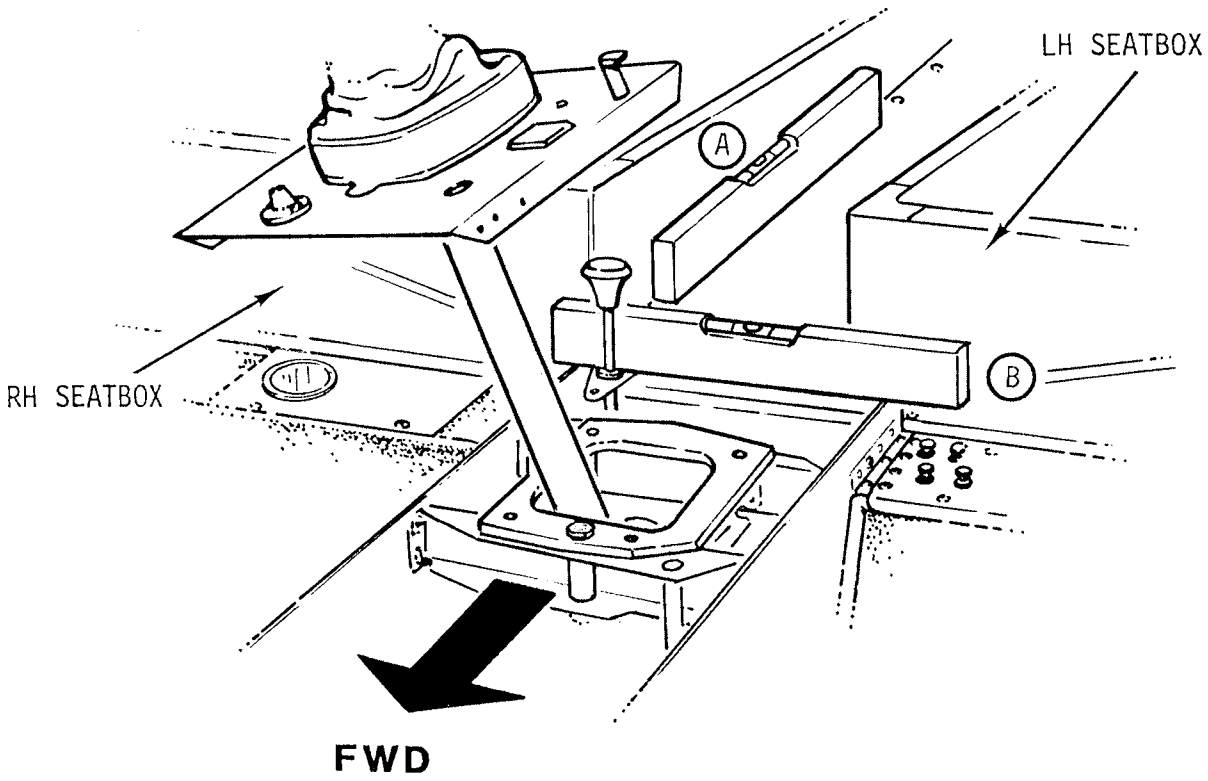

FIGURE 1-7 LEVELING

1.230 Weighing and CG Calculation

> NOTE
>
> Use Equipment List/Weight and Balance record form in the Pilot's Operating Handbook to maintain a continuous record of the helicopter's weight and balance.

> NOTE
>
> When leveling helicopter laterally on scales, use shims at center of scales and subtract shim weight (tare) from that scale's reading.

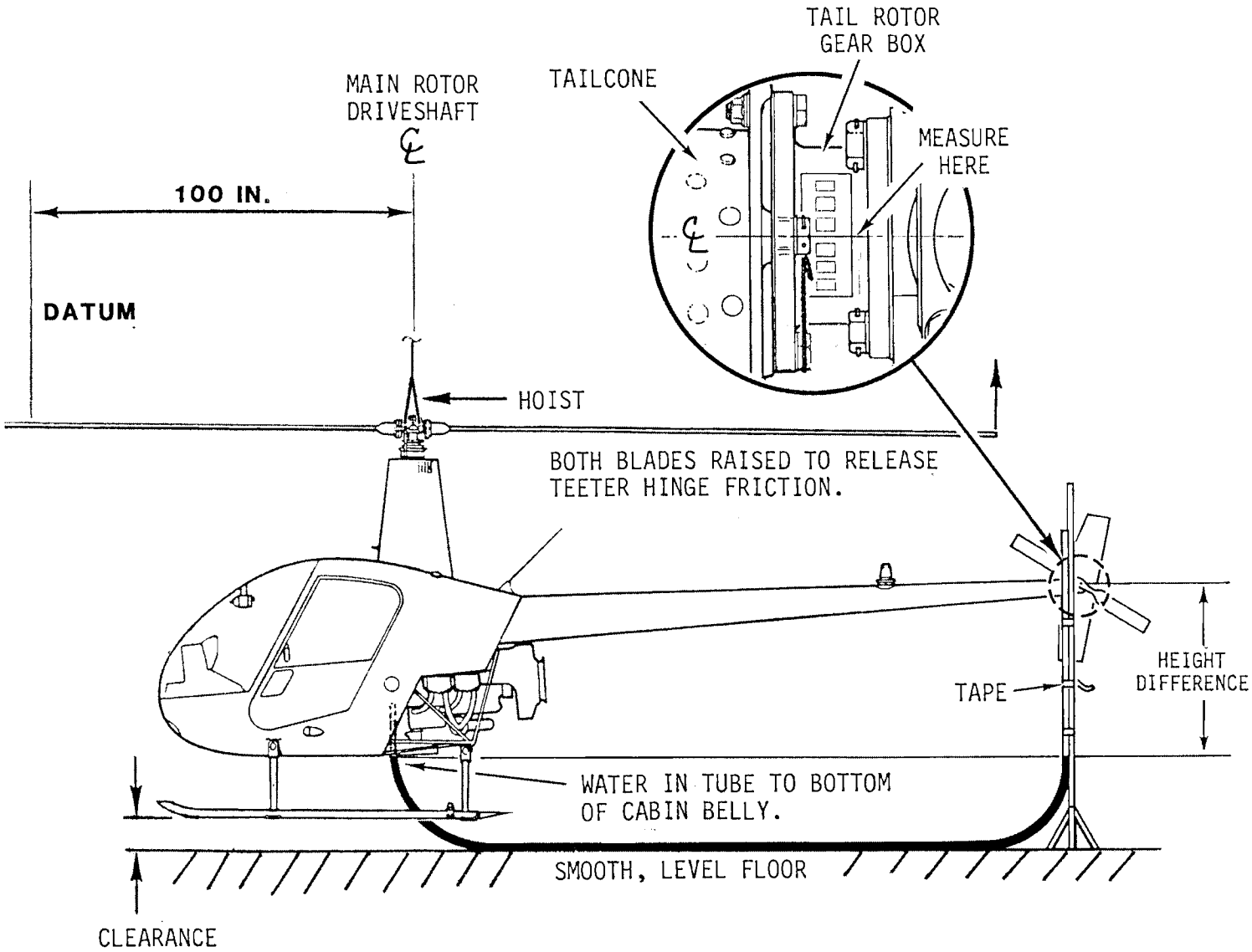

FIGURE 1-8 CG DETERMINATION

1.230 Weighing and CG Calculation (continued)

Reweigh helicopter when helicopter empty weight and empty weight center of gravity have been modified and if the accuracy of additional calculations is suspect.

Maintain a continuous record of the helicopter's weight and balance using the Weight and Balance Record in R22 Pilot's Operating Handbook (POH) Section 6.

NOTE

Verify scales are calibrated. Operate scales according to scale manufacturer's instructions.

NOTE

Never weigh the helicopter in the wind. Weigh helicopter on a level, flat, hard surface in a zero-wind environment for accurate scale readings.

1.231 Preparing Helicopter for Weighing

1. Defuel helicopter per § 1.150.
2. Service engine oil per R22 Pilot's Operating Handbook (POH) Section 8. Fill main and tail gearboxes to center of sight glass with A257-2 oil.
3. Clean aircraft per POH Section 8. Verify helicopter is completely dry.
4. Remove items that are not installed equipment (tools, rags, charts, etc.) from baggage compartments and stowage areas.
5. Verify cowlings, removable panels, cabin doors, removable controls, and POH are installed.
6. Verify Equipment List/Weight and Balance Data sheet (RF 134) and modifications recorded in the Weight and Balance Record correspond with installed equipment and recorded equipment locations.

1.232 Weighing Procedure and Calculations

NOTE

- Arm is the distance in inches from datum.
- Datum is located 100 inches forward of main rotor centerline.
- CG (arm) is determined by dividing total moment by total weight.

1. Refer to § 1.230. Prepare helicopter for weighing per § 1.231.
2. Hoist helicopter per § 1.220 approximately one foot above the ground. Have one person hold tail of helicopter while hoisting to stabilize helicopter.
3. With main rotor blades oriented approximately fore and aft, raise both blades off of droop stops to allow hub to teeter freely. Raise tail slightly and allow to settle.

1.232 Weighing Procedure and Calculations (continued)

4. Refer to Figure 1-8. With aircraft hanging freely and steady, use a water level and measure difference in vertical height between tail rotor gearbox centerline and cabin belly at vertical firewall. Ensure no air bubbles in water level tube.

   Record height difference: _____ inches

5. Determine longitudinal center of gravity:

   114.47 – [0.315 x (height difference from step 4)] = _____ inches

6. Place a 1000-lb capacity (minimum) scale under each skid. Locate center of scales approximately 10 inches forward of (ground handling wheel) skid supports.

7. Lower helicopter until it rests entirely on scales. Helicopter must be well balanced on scales before releasing tail. Be sure helicopter is level laterally by placing level on center of aft landing gear cross tube.

8. Determine empty weight:

Right scale reading:		_____ lb
Left scale reading:	+	_____ lb
Tare (leveling shims, hoist fixture, etc.):	–	_____ lb
Empty weight:	=	_____ lb

9. Determine CG with full fuel and minimum solo pilot:

   a. Bladder tanks:

$$\frac{(\text{CG from step 5}) \times (\text{Empty weight from step 8}) + 29243}{(\text{Empty weight from step 8}) + 310} = _____ \text{ in.}$$

   b. All-aluminum tank(s):

      i. **With aux tank:**

$$\frac{(\text{CG from step 5}) \times (\text{Empty weight from step 8}) + 30180}{(\text{Empty weight from step 8}) + 319} = _____ \text{ in.}$$

      ii. **Without aux tank:**

$$\frac{(\text{CG from step 5}) \times (\text{Empty weight from step 8}) + 23011}{(\text{Empty weight from step 8}) + 249} = _____ \text{ in.}$$

10. If CG from step 9 is aft of aft limit (refer to R22 Pilot's Operating Handbook [POH] Section 2 for model-specific data), determine required nose ballast:

$$\frac{[\text{CG from step 5} - (\text{model's aft limit})] \times (\text{Empty weight from step 8}) - 2358}{64.5} = _____ \text{ lb}$$

1.232 Weighing Procedure and Calculations (continued)

11. Adjust weight and balance to correct for drained unusable fuel and ballast:

Item	Weight (lb)		Longitudinal CG (arm, inches)		Moment (in.-lb)
Multiply empty weight from step 8 by CG from step 5	_____	x	_____	=	_____
Nose ballast:	_____	x	37.5	=	_____
Unusable fuel (add):	10.2*, 6.0**, or 3.6***	x	100.0	=	_____
	_____		_____		_____

* Bladder tanks

** All-aluminum tank(s) with aux tank

*** All-aluminum tank(s) without aux tank

CAUTION

CG with full fuel and minimum solo pilot weight must be at or forward of aft CG limit.

12. Determine lateral center of gravity:

$$\frac{(\text{Right scale reading} - \text{Left scale reading})}{(\text{Right scale reading} + \text{Left scale reading})} \times 37 = _____ \text{ in.}$$

13. Determine lateral moment:

(Basic Empty Weight) x (lateral CG) = _____ in.-lb

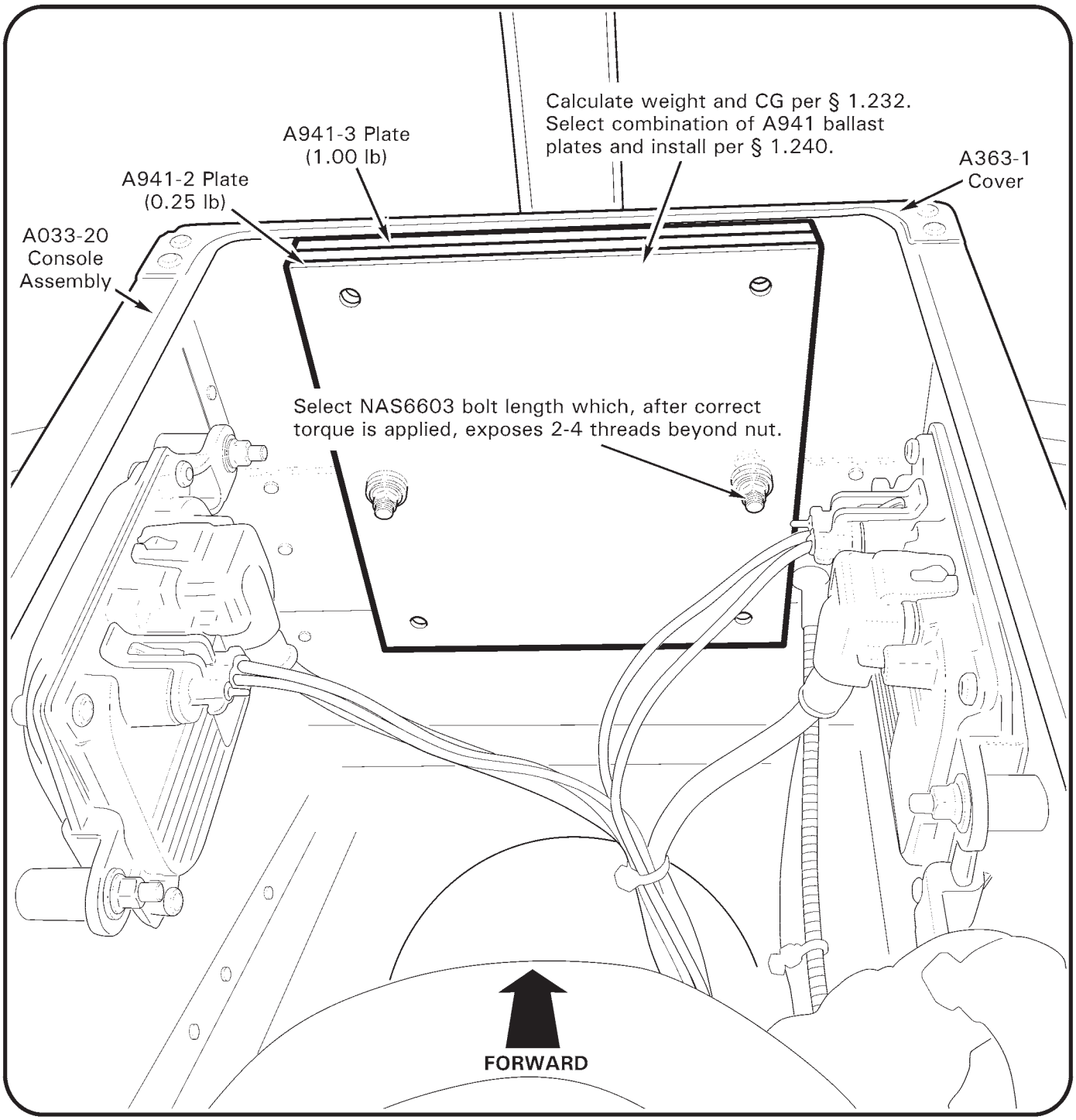

FIGURE 1-9 NOSE BALLAST
(View inside lower console assembly with upper console hinged aft)

1.240 Ballast Installation

Refer to R22 Illustrated Parts Catalog (IPC) Figure 8-1.

> NOTE
>
> Maximum allowable nose ballast is 10.0 lb.

> **CAUTION**
>
> Altering fixed ballast can appreciably affect helicopter center of gravity (CG). If fixed ballast information is unknown, reweigh helicopter per § 1.232.

1. Remove screws and hinge upper console assembly aft. Insert foam support or equivalent between console and cyclic to protect instrument faces.

2. Refer to Figure 1-9. Remove hardware securing A941-2 or -3 ballast plate(s), if installed, to A363-1 cover.

3. If A941 ballast attach holes are not previously drilled, use A941 ballast as template and mark hole locations. Drill 0.198 inch diameter (#8 drill size) hole at marked locations.

4. Remove or install ballast plates per calculations in § 1.232. Select NAS6603 bolt length to meet torque requirements per § 1.310. Install hardware, standard torque bolts per § 1.320, and torque stripe per Figure 2-1.

5. Remove foam, hinge upper console assembly forward, and install screws. Verify security.

6. Reweigh and/or calculate basic empty weight and CG per § 1.232.

7. Revise Weight and Balance Record in R22 Pilot's Operating Handbook (POH) Section 6 to reflect ballast removal or installation using the following data:

	Weight	Longitudinal Arm	Longitudinal Moment	Lateral Arm	Lateral Moment
Nose ballast	0-10.0 lb	37.5 in.	Variable	0.0 in.	0.0 in.-lb

Given		Symbols	
Y	= Unknown	Y	= Torque wrench setting
T	= 135 in.-lb	T	= Torque applied to fastener
L	= 10 in.	L	= Length of torque wrench
A	= 1.5 in.	A	= Length of adapter

When using an adapter that lengthens torque wrench effective length, calculate torque wrench setting using the formula below:

EXAMPLE

$$\textbf{Solve for Y} = \frac{T \times L}{L + A} = \frac{135 \times 10}{10 + 1.5} = \frac{1350}{11.5} = 117.39$$

Set torque wrench to 117 in.-lb to torque fastener to 135 in.-lb.

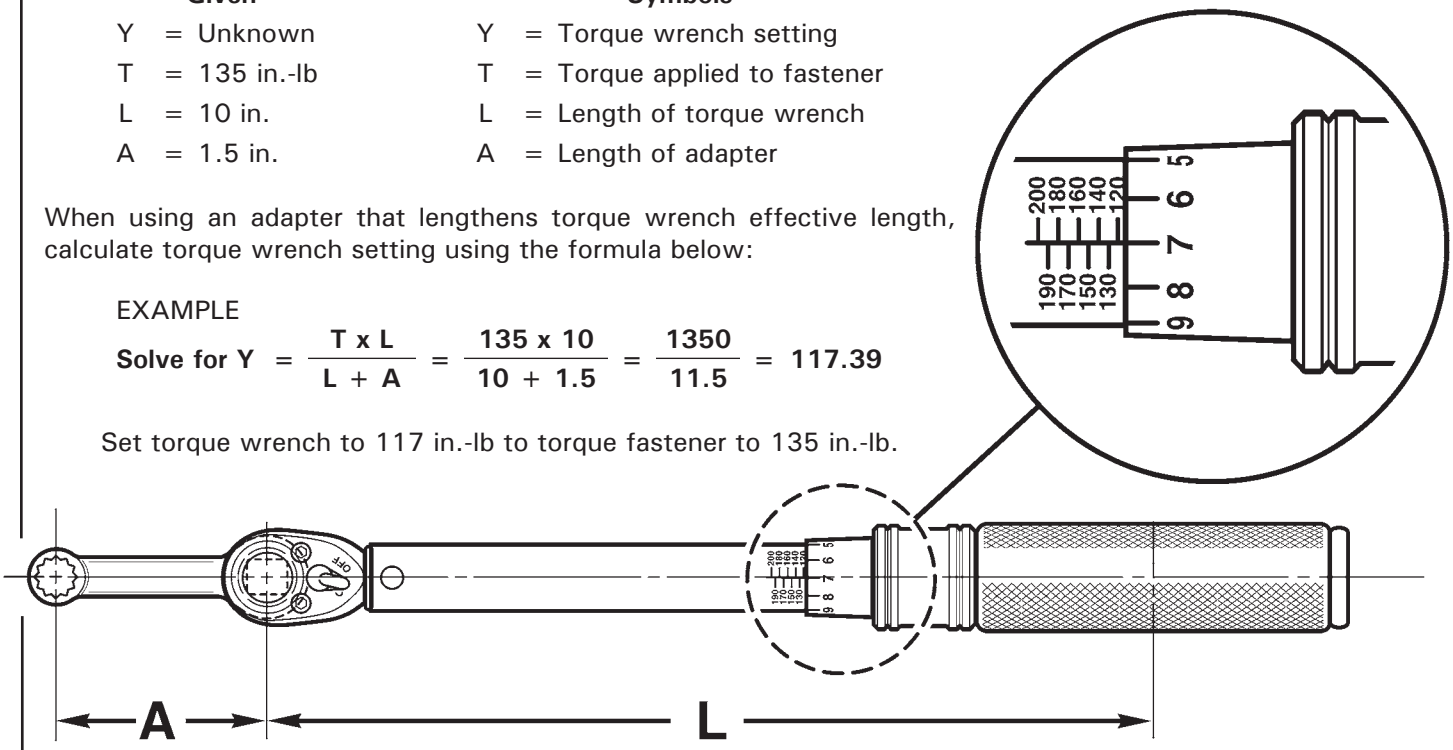

FIGURE 1-10 LENGTHENING TORQUE WRENCH EFFECTIVE LENGTH

Given		Symbols	
Y	= Unknown	Y	= Torque wrench setting
T	= 135 in.-lb	T	= Torque applied to fastener
L	= 10 in.	L	= Length of torque wrench
A	= 1.5 in.	A	= Length of adapter

When using an adapter that shortens the torque wrench effective length, calculate torque wrench setting using the formula below:

EXAMPLE

$$\textbf{Solve for Y} = \frac{T \times L}{L - A} = \frac{135 \times 10}{10 - 1.5} = \frac{1350}{8.5} = 158.82$$

Set torque wrench to 159 in.-lb to torque fastener to 135 in.-lb.

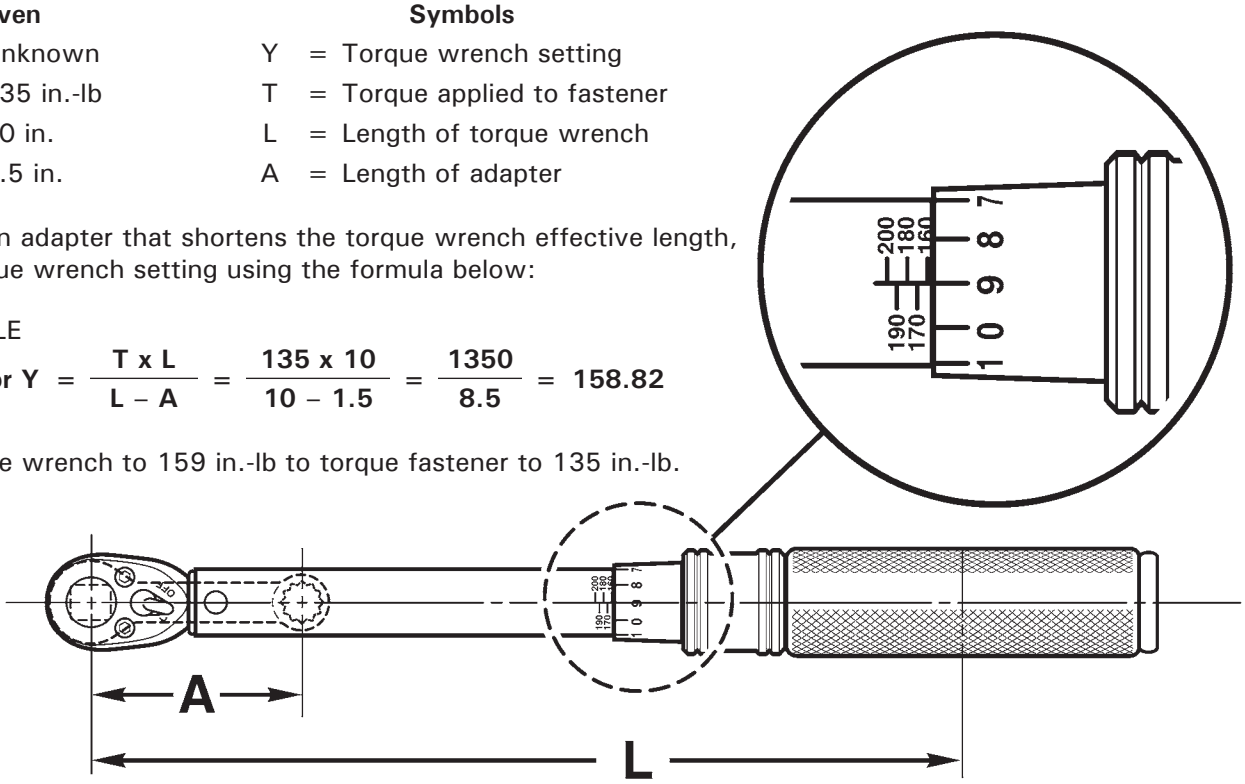

FIGURE 1-11 SHORTENING TORQUE WRENCH EFFECTIVE LENGTH

1.300 Fastener Torque Requirements

1.310 General

A. Tool Calibration

Dimensions and tolerances given in this manual are critical. Calibrate measuring tools per manufacturers recommendation at least once a year, when tool is dropped, misused, or calibration is suspect. This includes torque wrenches, micrometers, calipers, dial indicators, and spring scales.

WARNING

Proper torque is critical. Always use calibrated wrenches and undamaged, properly lubricated (where applicable) hardware. Ensure clamping surfaces are clean, and clamp only bare metal or wet-primed surfaces. Improper torque or dirty or painted clamping surfaces may result in loss of clamp-up, hardware or part damage, and premature failure.

B. Torque Value

Torque fasteners to standard dry values listed in § 1.320 unless otherwise specified. If torque is applied by rotating bolt, increase torque value by 10% to account for higher friction at bolt head and shank.

For example, the torque wrench setting for an NAS6605 bolt used with an MS21075 nutplate is determined as follows:

NAS6605 bolt (5 indicates 5/16 inch size) dry torque per § 1.320	240 in.-lb
Add 10% because torque must be applied at bolt head	+ 24 in.-lb
Torque wrench setting	264 in.-lb

C. Secondary Locking Mechanism

A secondary locking mechanism is required on all critical fasteners. B330 stamped nuts (palnuts) serve as the secondary locking mechanism in most areas on the helicopter, and are torqued per § 1.320. Palnuts must be replaced when removed. The R22 Illustrated Parts Catalog (IPC) lists secondary locking mechanisms for specific fasteners.

D. Critical Fastener

A critical fastener is one which, if removed or lost, would jeopardize safe operation of the helicopter. This includes joints in the primary control system, and non-fail-safe structural joints in the airframe, landing gear, and drive system.

CAUTION

D210-series nuts, which supersede MS21042L-series and NAS1291-series nuts, are required on critical fasteners.

WARNING

Assembly of flight controls is critical and requires inspection by a qualified person. If a second person is not available, RHC recommends the installer take a 5-minute break prior to inspecting flight control connections he has assembled.

1.310 Torque Requirements (continued)

WARNING

Unless otherwise specified, two threads minimum must be exposed beyond nut on any installation to insure proper locking of fastener. Four threads maximum may be exposed. More than four threads exposed may allow nut to seat against bolt shank, resulting in insufficient joint clamping.

CAUTION

Never substitute AN bolts for NAS bolts. NAS bolts have higher tensile strength.

E. Torque Requirements

1. Any self-locking nut whose drag has deteriorated appreciably must be replaced. Damaged hardware must be replaced.

2. Bolt and nut are to be clean and dry except when assembly procedure specifies anti-seize or thread-locking compound.

3. If chattering or jerking occurs, disassemble and re-torque fastener.

4. If special adapters which change effective length of torque wrench are used, final torque value must be calculated using formulas in Figures 1-10 and 1-11.

5. Proper thread engagement requires 2-4 threads beyond primary self-locking nut (palnuts excepted).

6. Torque wrenches must be calibrated annually, when dropped, or when a calibration error is suspected.

1.311 Torque Seal

WARNING

Refer to appropriate Material Safety Data Sheet (MSDS) and take necessary safety precautions when working in proximity to hazardous materials.

Refer to Figure 2-1. Torque seal (paint) is applied to all critical fasteners after palnut installation in a stripe extending from the fastener's exposed threads across both nuts and onto the component. Subsequent rotation of the nut or bolt can be detected visually. Position torque stripes for maximum visibility during preflight inspections. Approved torque seal is listed in § 1.400.

1.320 Standard Torques

NOTE

1. Values in inch-pounds unless otherwise specified.
2. Values include nut self-locking torque.
3. Increase values 10% if torqued at bolt head.
4. Wet indicates threads lubricated with A257-9 anti-seize.
5. For elbow and tee fittings which require alignment, torque to indicated value, then tighten to desired position.
6. Values ± 10% unless range is specified.
7. Unless otherwise specified, thread sizes 8-32 and smaller are not used for primary structure and do not require control of torques.

FASTENER SERIES	SIZE	EXAMPLE FASTENER	DRY TORQUE
NAS6603 thru NAS6608 Bolts NAS1303 thru NAS1308 Bolts NAS623 Screws NAS1351 & NAS1352 Screws NAS600 thru NAS606 Screws	10-32	NAS6603	50 in.-lb
	1/4-28	NAS6604	120 in.-lb
	5/16-24	NAS6605	240 in.-lb
	3/8-24	NAS6606	350 in.-lb
	7/16-20	NAS6607	665 in.-lb
	1/2-20	NAS6608	995 in.-lb
AN3 Bolts AN4 Bolts AN6 Bolts AN8 Bolts AN502 & AN503 Screws AN509 Screws AN525 Screws MS24694 Screws MS27039 Screws	10-32	AN3	37 in.-lb
	1/4-28	AN4	90 in.-lb
	3/8-24	AN6	280 in.-lb
	1/2-20	AN8	795 in.-lb
STAMPED NUTS (PALNUTS)	10-32	B330-7 (MS27151-7)	6 to 15 in.-lb
	1/4-28	B330-13 (MS27151-13)	11 to 25 in.-lb
	5/16-24	B330-16 (MS27151-16)	20 to 40 in.-lb
	3/8-24	B330-19 (MS27151-19)	29 to 60 in.-lb
	7/16-20	B330-21 (MS27151-21)	42 to 85 in.-lb
	1/2-20	B330-24 (MS27151-24)	54 to 110 in.-lb
TAPERED PIPE THREADS	1/8-27	N/A	60 in.-lb
	1/4-18	N/A	85 in.-lb
	3/8-18	N/A	110 in.-lb
	1/2-14	N/A	160 in.-lb
	3/4-14	N/A	230 in.-lb
ROD END JAM NUTS (AN315 and AN316)	10-32	AN315-3	15 in.-lb
	1/4-28	AN316-4	40 in.-lb
	5/16-24	AN316-5	80 in.-lb
	3/8-24	AN316-6	110 in.-lb

1.330 Special Torques

These torques are non-standard and supersede those in § 1.320.

NOTE

1. Values in inch-pounds unless otherwise specified.
2. Values include nut self-locking torque.
3. Increase values 10% if torqued at bolt head.
4. Wet indicates threads lubricated with A257-9 anti-seize.
5. For elbow and tee fittings which require alignment, torque to indicated value, then tighten to desired position.
6. Values ± 10% unless range is specified.
7. Unless otherwise specified, thread sizes 8-32 and smaller are not used for primary structure and do not require control of torques.

AREA	(QUANTITY) FASTENER	TORQUE
DRIVE SYSTEM	(1) AN320-15 nut (1½ inch socket) on A007-3 shaft assembly	183 to 233 ft-lb wet
	(1) AN320-18 nut ($1^{11}/_{16}$ inch socket) on A007-5 shaft assembly	340 to 400 ft-lb wet
	(6) NAS6606-24H bolts, lower sheave	300 in.-lb
EMPENNAGE	(4) NAS6603-2 & (4) NAS6603-5 bolts, vertical stabilizer attach	70 in.-lb
FANWHEEL	(1) AN320-15 or AN320-18 nut – see DRIVE SYSTEM	
	(8) or (12) NAS6603-3 or -6 bolts and MS21042L3 nuts, cone-to-fanwheel	70 in.-lb
	(6) NAS6605-12, -13, or -14 bolts, hub	300 in.-lb
FUEL SYSTEM	(1) A657-1 nut, fuel valve elbow-to-bulkhead union	120 in.-lb
	(1) A726-1 line assembly, bulkhead union-to-gascolator	285 in.-lb
	(2) B254-3 strainer assembly, tank outlets	200 in.-lb
	(1) B283 hose assembly nuts, gascolator-to-carburetor	120 in.-lb
	(5) B289-1 bolts, fuel sender (torque in criss-cross pattern)	37 in.-lb
	(2) B330-6 palnut, fuel sender center stud	11 in.-lb
	(1) D205-32 hose assembly nuts, main tank-to-fuel valve	120 in.-lb
	(1) D205-33 hose assembly nuts, tank interconnect	120 in.-lb
	(1) D205-34 hose assembly nuts, main tank drain	60 in.-lb
	(16) AN805 nuts, fuel primer line	20-30 in.-lb
	(1) AN815-4D union, main tank, drain hose (bladder tanks)	145 in.-lb
	(1) AN815-6D union, main tank, tank interconnect hose	200 in.-lb
	(1) AN894D4-2 bushing, primer system	50-65 in.-lb
	(1) AN894D6-4 bushing, primer system	110-130 in.-lb
	(1) AN924-4D nut, main tank, drain valve (bladder tanks)	145 in.-lb
	(1) AN924-5D nut, low-fuel warning switch	150 in.-lb
	(4) MS27039C1-06 screws, fuel valve	16 in.-lb

1.330 Special Torques (continued)

AREA	(QUANTITY) FASTENER	TORQUE
FUEL SYSTEM (continued)	(4) MS27039DD1-26 screws, air bypass door	22-25 in.-lb
	(1) MS21042L4 nut, gascolator mounting plug	70 in.-lb
	(1) 0353-6-6 bulkhead union and nut	285 in.-lb
	Primer system line assembly nuts, flared end fittings	20-30 in.-lb
FUSELAGE	(1) B277-052 clamp, lower rib	50 in.-lb
	(1) D210-5 nut, tow ball	240 in.-lb
	(8) MS51861-37C screws, door hinges	36 in.-lb
LANDING GEAR	(4) AN4-25A bolts, ground handling support	70 in.-lb
	(56) NAS6604 bolts attaching floats to skids and skid extensions	50 in.-lb
MAIN ROTOR BLADE	(2 per blade) B289-2 self-sealing bolts in pitch horn	60–80 in.-lb
MAIN ROTOR GEARBOX	(1) AN320-8 nut, gearbox pinion	290-410 in.-lb
	(1) AN10-41A bolt, gearbox mounting (3) A650-1 fittings, gearbox mounting (requires MS21044N10 nuts)	90 ft-lb dry torqued from bolt head or nut
	(1) F650-3 bolt, gearbox mounting (3) A650-3 fittings, gearbox mounting (requires D210-10 nuts)	65 ft-lb, wet torque from bolt head or nut
	(6) MS20074-04-06 and -15 bolts in end cover	60 in.-lb
	(1) chip detector (threaded, non-quick-disconnect type)	Large nut 150 in.-lb Small nut 75 in.-lb
	(1) chip detector housing	150 in.-lb
	(1) filler plug	150 in.-lb
	(1) sight gage	150 in.-lb
MAIN ROTOR HUB	(1) NAS630-80 (or MS21250-10080) teeter hinge bolt; (2) NAS630-80 (or MS21250-10080) coning hinge bolts in A154-1 hub	New bolt: 0.016–0.017 inch elongation (stretch), wet Used bolt: 0.015–0.017 inch elongation, wet, & cotter pin holes must align
	(2) NAS632-82 (or MS21250-12082) coning hinge bolts in B370-1 hub	New bolt: 0.011–0.012 inch elongation (stretch), wet Used bolt: 0.010–0.012 inch elongation, wet, & cotter pin holes must align
OVERTRAVEL SPRING	(1) A486 screw, upper rod end	37 in.-lb
POWERPLANT	(1) A058-5 carburetor air temp probe	36–48 in.-lb
	(1) A760-1 oil temperature sender	300 in.-lb
	(2) B277-024 clamps, carb heat scoop	30 in.-lb
	(2) AN818 nuts, manifold pressure line	25–30 in.-lb

1.330 Special Torques (continued)

AREA	(QUANTITY) FASTENER	TORQUE
POWERPLANT (continued)	(4) AN818-8 nuts, oil cooler line (stainless-steel lines)	40 ft-lb
	(4) AN818-8 nuts, oil cooler line (aluminum lines)	230–260 in.-lb
	(1) AN894D4-3 bushing, manifold pressure line, at firewall	135–150 in.-lb
	(1) 3080-00038 cylinder head temperature probe	70–80 in.-lb
	(1) bolt, alternator belt tension	204 in.-lb
	(4) bolts, D723-1 oil adapter	90–100 in.-lb
	(4) carburetor-to-engine nuts	96 in.-lb initial, 204 in.-lb final, torque in a crisscross pattern
	(8) exhaust riser flange nuts, plain	160–180 in.-lb
	(8) exhaust riser flange nuts, self-locking	200–220 in.-lb
	(2) ground strap-to-engine nuts	96 in.-lb
	(1) nut, B315-1 clip for magneto harness clamp	60 in.-lb
	(1) nut on A462-1 carburtetor heat control wire-to-slider valve attach fitting	25–30 in.-lb
	(1) nut on A462-4 mixture control wire-to-carburetor mixture arm attach fitting	25–30 in.-lb
	(8) spark plugs	420 in.-lb wet with A257-10 thread lubricant
	(1) thermostatic oil cooler bypass valve	290–310 in.-lb
	(6 per cover) valve cover retaining screws when used with clean, dry, red silicon gasket on clean, dry valve cover and cylinder head mating surfaces	25 in.-lb cold engine, 20 in.-lb warm engine
	(1) terminal retaining nut, alternator output terminal (use back-up wrench on stud retaining nut to prevent loss of stud clamp-up)	50 in.-lb
	(2) terminal retaining nuts, D748-3 alternator field and aux terminals (use back-up wrench on stud retaining nuts to prevent loss of stud clamp-up)	14 in.-lb
	(2) terminal retaining nuts, D748-4 alternator field and aux terminals (use back-up wrench on stud retaining nuts to prevent loss of stud clamp-up)	20 in.-lb
	(1) terminal retaining nut, oil temperature sender	20 in.-lb
STEEL TUBE FRAME	(2) NAS1351-8H40P internal-wrenching screws	70–75 ft-lb wet
	(3) NAS6604-3 bolts – (1) lower-left frame aft strut-to-upper frame, and (2) on removable aft, right strut	120 in.-lb with B270-1 on shank to seal strut holes
SWASHPLATE	(2) AN503-8-4 screws, magnetic pick-up bracket	17 in.-lb
	(16) AN503-8-8 screws	17 in.-lb
	(1) NAS6605-8 bolt clamping early revision A203 yokes	190 in.-lb
	(1 per link) 21FKF-616 jam nut, main rotor pitch link barrel	100 in.-lb

1.330 Special Torques (continued)

AREA	(QUANTITY) FASTENER	TORQUE
TAIL ROTOR GEARBOX	(1) B549-1 retainer, input seal	70 ft-lb wet
	(3) MS20074-04-06 bolts, gearbox-to-tailcone mounting	100 in.-lb
	(8) MS20074-04-06 bolts on A021 gearbox	60 in.-lb
	(12) MS20074-04-06 bolts on B021 gearbox	100 in.-lb
	(1) MS21042L4 nut, A031 pitch control housing stud	90 in.-lb
	(1) MS21042L4 nut, A119-1 bumper retainer	120 in.-lb
	(1) NAS1291-8 nut retaining B546 input yoke on B021 gearbox	70 ft-lb wet with B270-11
	(1) NAS1304-38 bolt, spherical tail rotor teeter (delta) hinge	150 in.-lb
	(1) NAS6604-38 bolt, elastomeric tail rotor teeter (delta) hinge	150 in.-lb
	(1) chip detector on A021 gearbox	100 in.-lb
	(1) chip detector on B021 gearbox	60 in.-lb
	(1) filler-vent plug	100 in.-lb
	(1) sight gage on A021 gearbox	150 in.-lb
	(1) sight gage on B021 gearbox	100 in.-lb
WINDSHIELD	(24) AN526C832R12 screws, on center outside retainer	16 in.-lb

1.400 Approved Materials

The following items are available from the noted manufacturer(s) or their distributor(s). Check with appropriate regulatory authority(s) for allowable usage of materials.

WARNING

Refer to appropriate Material Safety Data Sheet (MSDS) and take necessary safety precautions when working in proximity to hazardous materials.

CAUTION

Follow product manufacturer's instructions for handling and storage.

1.410 Paint Strippers

PRODUCT	MANUFACTURER/SUPPLIER	APPLICATION
Cee-Bee Stripper A-292	McGean-Rohco: Cee-Bee Division Downey, CA	Metal parts, except blades and flex plates.
Plastic Media Blasting System	Pauli & Griffin Co. Vacaville, CA	Metal parts except blades and unsupported sheet metal less than 0.040 inch thick.

1.420 Solvents and Cleaners

PRODUCT	MANUFACTURER/SUPPLIER	APPLICATION
QSOL 220	Safety-Kleen Systems, Inc. Plano, TX	General use for cleaning prior to applying primer, topcoat, adhesive, or sealant.
Benzene, 1-Chloro-4 (Trifluoromethyl) PCBTF	Any	" "
Final Klean 3909S	Du Pont Chemical Los Angeles, CA	" "
EM-Citro*	LPS Laboratories, Inc. Tucker, GA	" "
Acetone	Any	" "
Lacolene (Aliphatic Hydrocarbon)	Any	Acrylic plastic cleaner only.
Presolve	LPS Laboratories, Inc. Tucker, GA	Hydraulic components only.
Tetrachloroethylene (Perchloroethylene)	Any	Vapor degreaser.
815 GD	Brulin Corporation Indianapolis, IN	Ultrasonic cleaning, general use.**
SF50	L&R Mfg. Co. Kearny, NJ	" "

1.420 Solvents and Cleaners (continued)

PRODUCT	MANUFACTURER/SUPPLIER	APPLICATION
#112 Ammoniated or #222 Nonammoniated cleaning & rinse solution	L&R Mfg. Co. Kearny, NJ	Ultrasonic cleaning, avionics components only.

* May be used on acrylic plastic.
** Mix 5%-20% by volume; titration not required.

1.430 Fillers and Putty

PRODUCT	MANUFACTURER/SUPPLIER	APPLICATION
315 Putty & Blue Cream Hardener	DuPont Chemical Los Angeles, CA	Minor surface imperfections.
05960 Acryl - Green	3M St. Paul, MN	" "
SBF1191	Gearhead Products Indianapolis, IN	" "

1.440 Torque Seal

PRODUCT	MANUFACTURER/SUPPLIER	APPLICATION
F-900 (Any color except red)	Organic Products Co. Irving, TX	Torque seal.

1.450 Primers

PRODUCT	MANUFACTURER/SUPPLIER	APPLICATION
Gray epoxy CA 7422A/B/C or CA 7501A/B	PRC - Desoto Int., Inc. Sylmar, CA	Unlimited.
Gray epoxy 4001PS001 with CS4902 curing solution	AkzoNobel Waukegan, IL	
Aviation Primer, Green, A-702 (Aerosol)*	Valspar Corporation Medina, OH	Limited or touch-up use only.

* Shelf life is two years.

1.455 Powder Coat

PRODUCT	MANUFACTURER
13-7004 Corvel Grey Zinc Rich Epoxy Powder*	AkzoNobel Santa Fe Springs, CA
81-2158 Vitralon Grey Zinc Rich Epoxy Powder*	Pratt & Lambert Chemical Coatings Buffalo, NY
39/80020 Smooth Matte Black Polyester Topcoat Powder*	Tiger Drylac USA Cucamonga, CA

* Shelf life is 12 months from date of manufacture at ambient temperature.

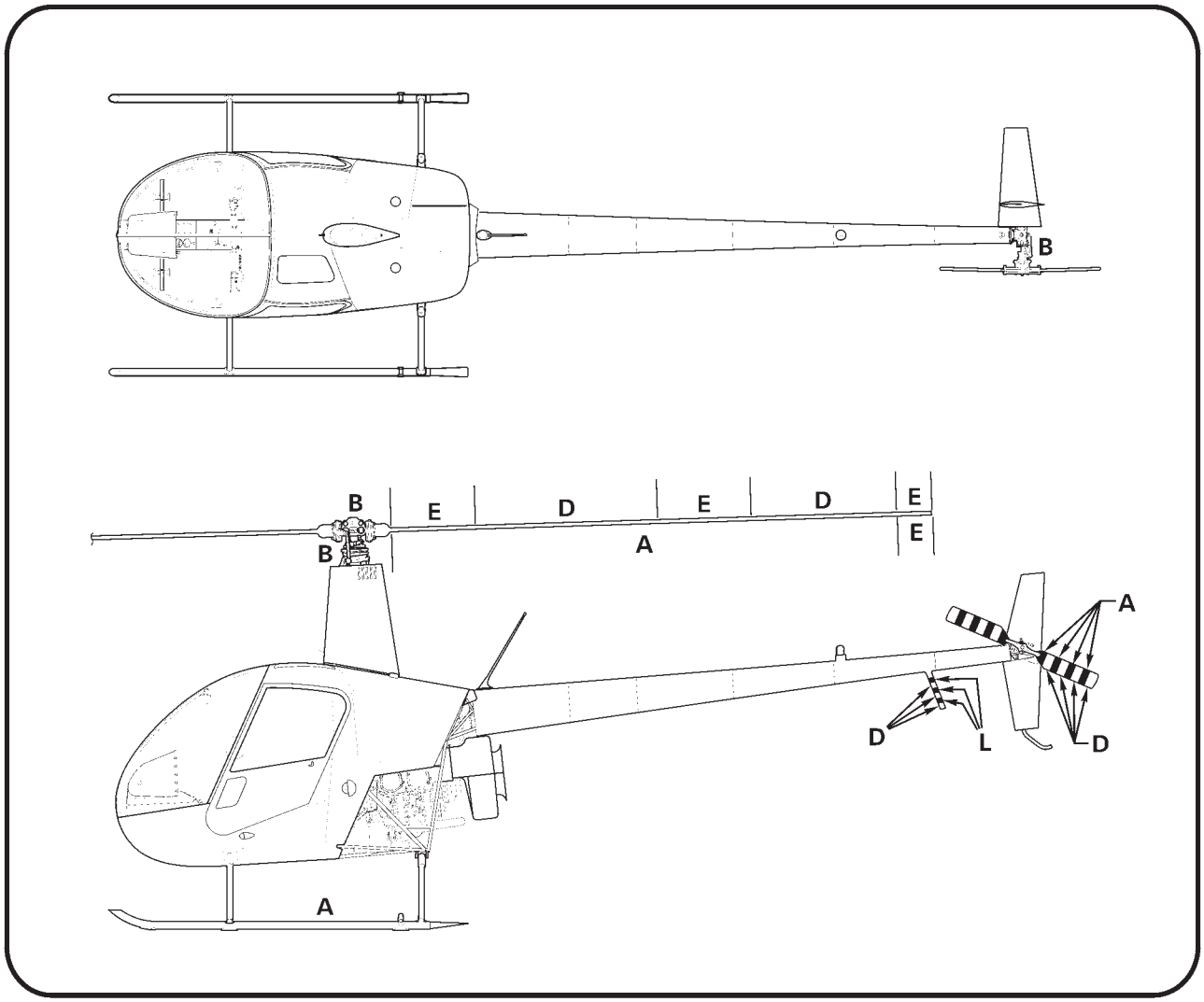

FIGURE 1-12 PAINT CODES
(Refer to Chapter 9 for rotor blade paint dimensions.
Exterior surface codes are D & F unless otherwise specified.)

1.455 Powder Coat (continued)

PRODUCT	MANUFACTURER
49/72460 Smooth Glossy Gray RAL 7043 Polyester Topcoat Powder*	Tiger Drylac USA Cucamonga, CA
49/22460 Smooth Glossy Yellow RAL 1028 Polyester Topcoat Powder*	" "
PFWF104S9 White Polyester Topcoat Powder*	Dupont Co. Wilmington, DE

* Shelf life is 12 months from date of manufacture at ambient temperature.

1.460 Paints

Refer to Figures 1-12 and 1-13 for paint code application. Paint codes for specific helicopter serial numbers are listed on the inside cover of factory-supplied maintenance record (logbook).

> NOTE
>
> Use fisheye eliminator, accelerator, or other additives per manufacturer's recommendations.

CODE	MATERIAL	MANUFACTURER
A	Flat Black Imron 373-P-29950	Axalta Wilmington, DE
	Semi-gloss Black 3900-05 with 39-SG catalyst and water reducer	Cardinal Industrial Finishes El Monte, CA
	Semi gloss Black 656-58-7038 with X-503 activator	AkzoNobel Waukegan, IL
B	Dark gray Imron AF400/AF700	Axalta Wilmington, DE
C	Engine gray IE-8948	Randolph Products Co. Carlstadt, NJ
	Lycoming A219 gray engine enamel (aerosol can touch-up; shelf life 2 years)	Tempo Products Cleveland, OH
D	White Imron AF400/AF700	Axalta Wilmington, DE
E	Yellow Imron AF400/AF700	" "
F	Imron AF400/AF700 Colors	" "
G	Clear Imron AF740	Axalta Wilmington, DE
H	Semi-gloss Clear 656-58-9000 with X-503 activator	AkzoNobel Waukegan, IL
J	White Imron 2.1 FT flat polyurethane enamel with FG-1333 activator and T-1021 or T-1022 thinner	Axalta Wilmington, DE
K	White Cat-L-Ink 50-100R (shelf life 3 years) 20/A Catalyst (shelf life 2 years)	Ethone, Inc. West Haven, CT
	Yellow Cat-L-Ink 50-202AR or BR (shelf life 3 years) 20/A Catalyst (shelf life 2 years)	" "
	Med Red Cat-L-Ink 50-508R (shelf life 3 years) 20/A Catalyst (shelf life 2 years)	" "
L	Red Imron AF400/AF700	Axalta Wilmington, DE
M	Orange Imron AF400/AF700	" "
N	Krylon 1311 (shelf life 2 years) Matte Clear (aerosol can)	Krylon Div. of Borden Columbus, OH
O	Light gray Imron AF400/AF700	Axalta Wilmington, DE
P	Silver Bullet AM Tracer Black 20-452AM-F1 with 16-CURE-F4 activator	Burke Industrial Coatings Ridgefield, WA

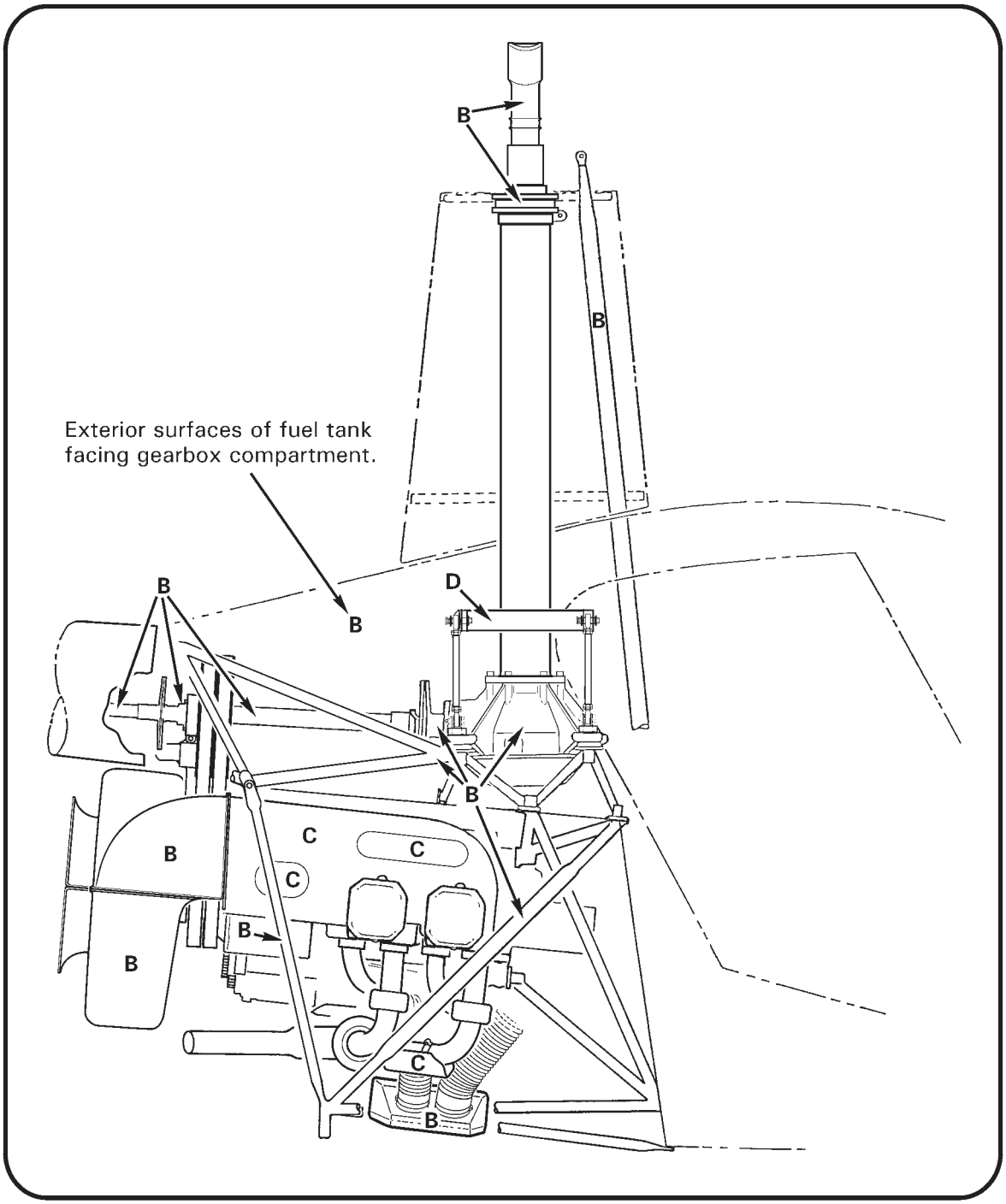

FIGURE 1-13 PAINT CODES

1.460 Paints (continued)

For limited touch-up of interior and landing gear only:

CODE	MATERIAL	MANUFACTURER
A	Krylon 1613 (shelf life 2 years) Semi-Flat Black (aerosol can)	Krylon Div. of Borden Columbus, OH
	NYBC 14 (shelf life 2 years) Semi-Flat Black	New York Bronze Powder Co. Scranton, PA
	Cardinal A-2000-05 Flat Black (aerosol can)	Cardinal Industrial Finishes So. El Monte, CA

1.470 Lubricants

RHC PART NO.	LUBRICANT TYPE	MANUFACTURER'S PART NO.	MANUFACTURER
A257-1	Grease (general purpose)	101	Southwestern Petroleum Corp. Fort Worth, TX
A257-2	Gear oil	201 SAE 90	Southwestern Petroleum Corp. Fort Worth, TX
A257-3	Grease	Aero Shell 14 MIL-G-25537	Shell Oil Co.
A257-4	Oil (automatic transmission fluid)	Dexron II or Dexron II/Mercon or Dexron III/Mercon	Quaker State or Pennzoil
A257-5	Grease (water resistant)	3120 11402	Sta-Lube, Inc. Compton, CA Lubrimatic Buffalo Grove, IL
A257-6	Grease (fuel resistant)	Fuelube EZ Turn	Fleet Supplies Inc. Cleveland, OH United-Erie Div. of Interstate Chemical Co. Erie, PA
A257-7	Dry film lubricant	Lubri-Kote Type A 1040 CR	Mealey Ind. Lubricants Cleveland, OH
A257-8	Rubber lubricant	P-80	International Products Corp. Trenton, NJ
A257-9	Anti-seize	Silver Grade	Loctite Corp. Newington, CT
A257-10	Substitute A257-16		
A257-12	Grease	Mobilgrease 28 MIL-PRF-81322	Exxon Mobil Corp.
A257-16	Engine oil	Type M 20W-50, SAE J1966	Phillips 66 Co. Pasadena, TX

1.470 Lubricants (continued)

RHC PART NO.	LUBRICANT TYPE	MANUFACTURER'S PART NO.	MANUFACTURER
A257-16	Engine oil	Aviation oil 20W-50, SAE J1966	Exxon Mobil Corp. Fairfax, VA
A257-17	Substitute A257-19		
A257-18	O-ring lubricant	55	Dow Corning Corp. Midland, MI
A257-19	Valve lubricant and sealant compound	111	Dow Corning Corp. Midland, MI
A257-21	Petrolatum lubricant	P-16	Panef Corp. Milwaukee, WI

1.480 Adhesives and Sealants

RHC PART NO.	DESCRIPTION	COLOR	MFR. PART NO.	MANUFACTURER
B270-1	Sealant - polysulfide, fuel resistant (2-part)	Gray	FS-8907 B-2	PPG Aerospace Glendale, CA
	Sealant - polysulfide, fuel resistant (2-part)	Gray	WS-8032 B-2	Royal Adhesives & Sealants Wilmington, CA
	Sealant - polysulfide, fuel resistant (2-part)	Gray	AC-350 B-2	Advanced Chemistry & Technology Inc., Garden Grove, CA
B270-2	Substitute B270-1			
B270-4	Substitute B270-13			
B270-5	Sealant - synthetic rubber putty (1-part)	White Light Gray	Q4-2805 94-031	Dow Corning Corp. Midland, MI
B270-6	Sealant & lubricant - thread (1-part)	Gray	Titeseal 55	Radiator Spec. Co. Charlotte, NC
B270-7	Substitute B270-14			
B270-8	Adhesive - rubber, nitrile/acetone (1-part)	Tan	C 160	Stabond Corp. Gardena, CA
B270-9	Adhesive - epoxy, structural, flexible (2-part)	Gray	2216 B/A	3M Co. St. Paul, MN
B270-10	Adhesive/sealant - threadlocker, anaerobic, tight-fits (1-part)	Red	271	Henkel Loctite Corp. Rocky Hill, CT
B270-11	Adhesive/sealant - threadlocker, anaerobic, loose-fits (1-part)	Red	277	Henkel Loctite Corp. Rocky Hill, CT

1.480 Adhesives and Sealants (continued)

RHC PART NO.	DESCRIPTION	COLOR	MFR. PART NO.	MANUFACTURER
B270-12	Sealant - electrical potting (2-part)	Any color except red	MIL-PRF-8516 Type II, Class 2, Category A or B	Any
B270-13	Sealant - silicone rubber, noncorrosive (1-part)	Translu-cent	3145	Dow Corning Corp. Midland, MI
B270-14*	Adhesive - foam, neoprene/water (1-part)	White Lavender	100 Neutral 100 Lavender	3M Co. St. Paul, MN
B270-15	Adhesive - plastic, for vinyl (1-part)	Clear	2262	3M Co. St. Paul, MN
B270-16	Substitute B270-14			
B270-17	Adhesive - cyanoacrylate, instant (1-part)	Clear	Super Bonder 495	Henkel Loctite Corp. Rocky Hill, CT
B270-18	Adhesive - weather strip (1-part)	Black	051135-08008	3M Co. St. Paul, MN
B270-19	Adhesive - epoxy structural, rigid (2-part)	Green	1838 B/A	3M Co. St. Paul, MN
B270-20	Adhesive/sealant - threadlocker, anaerobic, non-permanent (1-part)	Purple	222 or 222MS	Henkel Loctite Corp. Rocky Hill, CT
B270-21	Protectant - corrosion, non-drying (1-part)	Lt. Amber	LPS 3	LPS Laboratories, Inc. Tucker, GA
B270-22	Protectant - corrosion, drying (1-part)	Amber	LPS Hardcoat	LPS Laboratories, Inc. Tucker, GA
B270-23	Sealant - gasket (1-part) Sealant - gasket (1-part)	Brown Brown	GM3H (Gasket Maker #4) JV66B	Perfect Seal, Inc. Cincinnati, OH Dana Corp.; Churubusco, IN (Victor Reinz Brand)
B270-24	Activator/Primer - Anaerobic adhesive (1-part)	Translu-cent Green	7649	Henkel Loctite Corp. Rocky Hill, CT
B270-25	Clear Coat - automotive touch up, brush in bottle (1-part)	Clear	Clear Coat Touch up Bottle	Automotivetouchup Harahan, LA
B270-26	Sealant - Polysulfide, window glazing (2-Part)	Black	AC-251B-1	Advanced Chemistry & Technology Inc., Garden Grove, CA

* B270-8 may be substituted for B270-14.

1.490 Storage Limits

1. B283 hoses have a shelf storage life of 5 years. Hose service life is “on condition”, with a maximum of 12 years.

2. Elastic cords have a shelf storage life of 5 years. Elastic cord service life is “on condition”, with a maximum of 12 years. Use invoice or FAA Form 8130 date as start date.

3. Store V-belts at less than 85º F (30º C), with relative humidity below 70%. Avoid solvent and oil vapors, atmospheric contaminants, sunlight, and ozone sources (electric motors, arc welding, ionizing air purifiers, etc.). Belt shelf life is 4 years if preceding recommendations are followed. Use invoice date or FAA Form 8130 date as start date.

4. Oils and greases have a 5 year shelf life when stored and kept sealed in their original container. Use invoice date or FAA Form 8130 date as start date unless the manufacturer has marked container with manufacture date (in which case use manufacture date as start date).

5. Rubber o-rings, seals, and gaskets have a shelf storage life of 20 quarters (5 years). Flourocarbon (Viton) and silicon rubber products shall adhere to manufacturer’s expiration date(s). Service life is “on condition” with a maximum of 12 years. Use cure date on package as start date.

6. Store fuel cell (bladder) at temperatures above 45º F and below 75º F.

1.500 PART INTERCHANGEABILITY

The following parts are interchangeable. Unless noted otherwise, whenever one part is referred to in this manual, its same-size substitute part is also permitted.

Part	Interchangeable with:
AN340 nut	MS35649 nut per NASM35649 except AN340B8 nut
AN345 nut	MS35650 nut per NASM35650
N364 nut	MS21083 nut per NASM21083
AN507 screw	MS24693 screw per NASM24693
AN509 screw	MS24694 screw per NASM24694
AN515 screw	MS35206 screw per NASM35206
AN515C screw	MS51957 screw
AN515UB screw	B567-__ screw
AN525 & AN526 screw	MS27039C screw per NASM27039
AN814 & MS24391 plug	AS5169 plug
AN815 & MS24392 union	AS5174 union
AN819 & MS20819 sleeve	AS5176 sleeve
AN822 & MS20822 elbow	AS5195 elbow
AN823 & MS20823 elbow	AS5196 elbow
AN825 & MS20825 tee	AS5197 tee
AN826 & MS20826 tee	AS5198 tee
AN894 & MS24398 bushing	AS5173 bushing
AN900 gasket	MS35769 gasket per AS35769
AN924 nut & MS24400 nut	AS5178 nut
AN931 grommet	MS35489 grommet
AN936 lockwasher	B332-__ lockwasher
AN960-8L washer	NAS1149FN816P washer
AN960-8 washer	NAS1149FN832P washer
AN960-10L washer	NAS1149F0332P washer
AN960-10 washer	NAS1149F0363P washer
AN960-416L washer	NAS1149F0432P washer
AN960-416 washer	NAS1149F0463P washer
AN960-516L washer	NAS1149F0532P washer
AN960-516 washer	NAS1149F0563P washer
AN960-616L washer	NAS1149F0632P washer
AN960-616 washer	NAS1149F0663P washer
AVDEL 1693 rivet	AVDEL 1691 rivet
MS20604ML4W1 rivet	MS20604M4W1 rivet per NASM20604
MS21919 clamp	AS21919 clamp
NAS1291 nut	MS21042 nut per NASM21042
NAS1303 thru NAS1320 bolt	NAS6603 thru NAS6620 bolt*
NAS487 instrument nut	MS33737 instrument nut per NASM33737
NAS679A_ nut	NAS1291-_ nut, MS21042 nut per NASM21042
NAS679C_ M nut	NAS1291C_ M nut
NAS696 nutplate	MS21071 nutplate per NASM21071
NAS698 nutplate	MS21073 nutplate per NASM21073
NAS698 nutplate	MS21073 nutplate per NASM21073

* All except the following bolts which shall be NAS1300 series only: NAS1304-17, -28, -35, -37, & -38, and NAS1305-35

1.600 INSTRUCTIONS FOR UNCRATING, REASSEMBLING, AND FLIGHT TESTING R22 SERIES HELICOPTERS

A. UNCRATING AND REASSEMBLY: This must be performed by a certificated mechanic.

1. Remove all components from tailcone crate and all accessible components from cabin crate. Assemble landing gear per Sections 5.220 (float gear only) and 5.320.

> **CAUTION**
>
> Do not lift helicopter and attached crate using main rotor hub; damage to main rotor gearbox and frames could result.

2. Attach a hoist to main rotor hub per Section 1.220. Lift aft end of crate while taking up slack in hoist. When main rotor shaft is vertical, remove bolts at landing gear attach points and remove crate. Install landing gear per Section 5.120. Lower helicopter on ground.

3. Install front cross tube cover panel. For float landing gear, set float pressure per Mariner supplement of Pilot's Operating Handbook and verify float stabilizer is being used in place of tail skid.

4. Install tailcone per Section 4.312. Install tail rotor visual warning guard.

5. Install empennage assembly per Section 4.322.

6. Install exhaust system per Section 6.520. Install lower half of cooling fan scroll.

7. Remove preservative plugs from engine cylinder upper spark plug holes. Install upper spark plugs and torque per Section 1.330. Connect ignition leads.

8. Fill engine oil to six quart mark on dipstick, as required.

9. Install main rotor blades per Section 9.112. Match color coded markings on blades, hub bolts, hub, and pitch links. Attach upper end of pitch links to pitch horns.

10. Install tail rotor per Section 9.212 or 9.213, as applicable.

11. If required, fill battery with electrolyte and charge.

12. Fill main and tail rotor gearboxes with A257-2 oil. For helicopters shipped "on-side", inject 6 ounces A257-2 oil into aft vent hole atop main rotor gearbox static mast tube.

13. Fuel helicopter and drain a small amount of fuel through gascolator.

1.600 INSTRUCTIONS FOR UNCRATING, REASSEMBLING, AND FLIGHT TESTING R22 SERIES HELICOPTERS (cont'd)

A. UNCRATING AND REASSEMBLY (cont'd)

14. If ship is equipped with artificial horizon, directional gyro, or vertical card magnetic compass, install as follows:

Artificial Horizon and/or Directional Gyro:

a) Remove amber ALT light and red OIL light from B050 console. Pull out A777-1, A981-1, or B197-1 instrument face by removing perimeter mounting screws. Place a pad under face to prevent scratches.

b) Install required instrument(s) using screws provided.

CAUTION
Directional gyro mounting screws must not exceed 1 inch in length or unit will be damaged.

c) Connect straight multi-pin connector to directional gyro and/or angled connector to artificial horizon ensuring that angled strain relief points down. Ensure that connectors lock in place. Ty-Rap excess wiring.

d) Install instrument face, ALT light, and OIL light.

Vertical Card Magnetic Compass:

Locate two wires extending from windshield bow. Slide one piece of heat- shrink tubing (provided) over each wire. Connect compass pins to wire sockets (polarity not critical). Position heat-shrink tubing over connections and apply heat. Install compass using two screws provided.

15. Install battery (Negative Ground System).

B. FLIGHT TEST: This must be performed by a qualified pilot and a certificated mechanic.

1. Perform preflight inspection per Pilot's Operating Handbook and inspection per Sections 2.205 and 2.210.

2. Check tail rotor balance per Section 10.240.

3. Perform hover checks in Section 2.220.1. DO NOT proceed into forward flight at this time.

4. Track and balance main rotor per Section 10.230.

5. While climbing at takeoff power per placard and 50 KIAS:

a) Evaluate roughness at maximum and minimum power-on RPM.

b) At minimum power-on RPM perform 30° left yaw to check for adequate directional control.

1.600 INSTRUCTIONS FOR UNCRATING, REASSEMBLING, AND FLIGHT TESTING R22 SERIES HELICOPTERS (cont'd)

B. FLIGHT TEST (cont'd)

6. During level flight at 3000 feet pressure altitude (if able), MCP, with right trim and governor on:

   a) Verify longitudinal and lateral cyclic control forces are neutralized (no tendency of cyclic to creep longitudinally or laterally).

   b) Verify collective control forces are neutralized (no tendency of collective to creep up or down).

   c) Verify throttle correlation. Set MAP to 22 inches and turn governor off. Without twisting throttle, lower collective to 12 inches MAP then raise it to 22.5 inches MAP. RPM must stay in green arc.

7. Evaluate roughness at minimum power-on RPM, takeoff power per placard, and Vne per placard.

8. Check all instruments, gauges, and avionics for proper operation.

9. During autorotation at 50 KIAS and 90% rotorRPM, perform 30° right yaw to check for adequate directional control.

1.700 REPLACEMENT COMPONENT IDENTIFICATION (DATA) PLATES

In order to issue a replacement component identification plate for field installation, RHC must first receive old identification plate in legible condition. If old identification plate is lost or destroyed, then RHC must have an original letter (photocopies or faxes are NOT acceptable) from customer's Civil Aviation Authority authorizing identification plate replacement AND stating component name, part number, and serial number for each requested identification plate. There is a charge for each plate issued.

CHAPTER 2

INSPECTION

Section	Title	Page
2.000	Introduction	2.1
2.100	General Procedures	2.1
2.110	Ball and Roller Bearings	2.1
2.120	Push-Pull Tubes, Rod Ends, and Spherical Bearings	2.1
2.121	Push-Pull Tubes	2.1
2.122	Rod Ends and Spherical Bearings	2.2
2.125	Elastomeric Bearings	2.3
2.130	Telatemp Indicators	2.6
2.200	Ground and Flight Check For 100-Hour/Annual Inspection	2.7
2.205	Ground Check	2.7
2.210	Run Up	2.9
2.220	Flight Check	2.10
2.300	Airframe Preparation For 100-Hour/Annual Inspection	2.10
2.400	100-Hour/Annual Airframe Inspection	2.11
2.410	Inspection Procedures and Checklist	2.11
2.500	Special Inspections	2.41
2.501	Clutch Actuator Upper and Lower Bearings	2.41
2.502	A181-4 Actuator Lower Bearing Inspection and Lubrication	2.41
2.503	A184 Actuator Upper Bearing Inspection and Lubrication	2.42
2.507	V-Belt Inspection	2.43
2.508	Lower Sheave V-Belt Wear Pattern Inspection	2.45
2.510	Tail Skid Strike	2.46
2.520	Tail Rotor Strike	2.47
2.530	Main Rotor Strike	2.48
2.540	Rotor/Engine Overspeed	2.49
2.550	Hard Landing	2.51
2.560	Steel Tube Frame Corrosion	2.53
2.570	Main Rotor Blade Detail Inspection	2.54
2.571	Spar Cover Adhesive Damage (A016-2 main rotor blade only)	2.54
2.572	Main Rotor Blade Sealant and Filler Cracking	2.56
2.573	Visual Inspection of Main Rotor Blade Root Area	2.57
2.580	Float Inspection and Testing	2.58
2.590	Windshield Inspection	2.59
2.600	12-Year Inspection And Limited Overhaul Requirements	2.60

CHAPTER 2

INSPECTION (Continued)

Section	Title	Page
2.610	Inspection Procedure	2.60
2.620	Additional Parts Requiring Replacement on Some R22s	2.62
2.630	Component Inspection Procedure	2.63
2.700	2200-Hour Overhaul Requirements & Instructions	2.64
2.710	Inspection Procedure	2.65
2.720	Additional Parts Requiring Replacement on Some R22s	2.66
2.800	Additional Special Inspections	2.67
2.810	Volcanic Ash Recommendations	2.67
2.820	Lightning Strike	2.68

CHAPTER 2

INSPECTION

2.000 Introduction

The R22 helicopter must be inspected periodically to verify it is in airworthy condition. Required inspection intervals are maximum 100 hours time in service or 12 calendar months (annually), whichever occurs first. Fluid leaks, discoloration, dents, scratches, nicks, cracks, galling, chafing, fretting, and corrosion all warrant further investigation. Unairworthy items must be replaced or repaired as allowed by Robinson Helicopter Company. This section contains procedures for performing the required periodic airframe inspections.

2.100 General Procedures

Unless otherwise specified, the following general procedures apply to R22 inspection. When required, magnetic particle inspection may be performed in accordance with ASTM E 1444 and MIL-STD-1907. Fluorescent penetrant inspection may be performed in accordance with ASTM E 1417 and MIL-STD-1907.

2.110 Ball and Roller Bearings

The first indication of bearing failure is usually an increase in bearing noise. Noise will almost always start several hours before bearing failure or any increase in bearing temperature. Listen to drive system during start-up and shutdown. A failing bearing will produce a loud whine, rumble, growl, or siren sound. Upon hearing an unusual noise, thoroughly inspect all bearings before further flight. A failing bearing may have a distorted seal or be exuding a large amount of grease. Do not rely on Telatemps to detect failing bearings as temperature increase may occur only seconds before bearing disintegrates. Refer to § 2.501.

The failure of either actuator bearing in flight could cause loss of power to the rotor system and could result in a serious accident. The actuator upper ball bearing is on the clutch shaft aft of the upper sheave; the actuator lower roller bearing is on the fanshaft aft of the lower sheave. Just before complete failure of an actuator bearing, the clutch light may flicker constantly (on and off in less than one second). This should not be confused with its normal on-off re-tensioning in flight (on for 1-8 seconds then off). Flight should not be resumed until cause of the flickering clutch light has been determined.

2.120 Push-Pull Tubes, Rod Ends, and Spherical Bearings

2.121 Push-Pull Tubes

Nicks, cuts, or scratches in tube not more than 0.010 inch deep and not more than 1/4 of tube circumference may be polished out in lengthwise direction using 320-grit or finer wet-or-dry abrasive paper and 1-inch minimum blend radius. If depth exceeds these limits, tube must be replaced.

If tube is dented or flattened more than 5 percent of its diameter, it must be replaced.

2.122 Rod Ends and Spherical Bearings

Refer to Figure 2-1.

1. Maximum axial play: 0.020 inch
   Maximum radial play: 0.010 inch

2. Looseness between bearing outer race and rod end housing is not permitted.

3. Rod ends not riveted in place must block passage of 0.020 inch diameter wire through witness hole.

4. Rod end jam nuts and palnuts must be torqued per § 1.320 and torque striped, per § 1.310, at the most visible position for pre-flight inspection. Torque stripe must extend across nuts to both rod end shank and push-pull tube (or pitch link barrel, yoke, support, strut, etc.). Torque stripes are subject to deterioration and must be periodically renewed.

5. Rod ends must be centered, i.e., rod ends should be positioned to allow as much movement as possible without binding.

WARNING

Assembly of flight controls is critical and requires inspection by a qualified person. If a second person is not available, the installer must take a 5-minute break prior to inspecting flight control connections he has assembled.

CAUTION

Teflon-lined bearings must not be lubricated or solvent cleaned.

2.120 Push-Pull Tubes, Spherical Bearings & Rod Ends (cont'd)

NOTE

FOR MAXIMUM ROD EXTENSION WHEN NO WITNESS HOLE IS PROVIDED:

ROD END	ℓmax
A101-4	1.10 in.

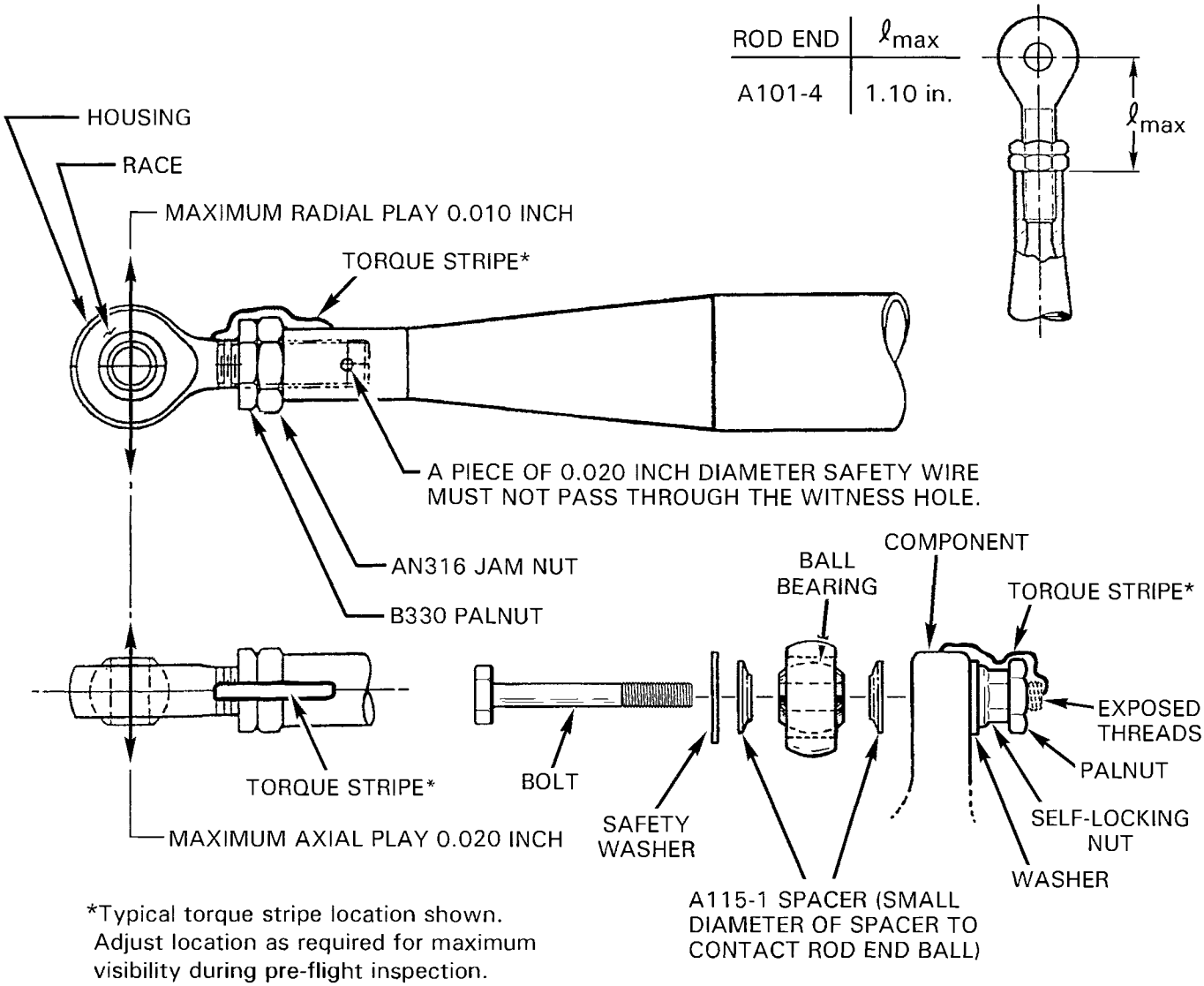

*Typical torque stripe location shown. Adjust location as required for maximum visibility during pre-flight inspection.

FIGURE 2-1 ROD END AND SPHERICAL BEARING PLAY LIMITS AND TORQUE STRIPE APPLICATION

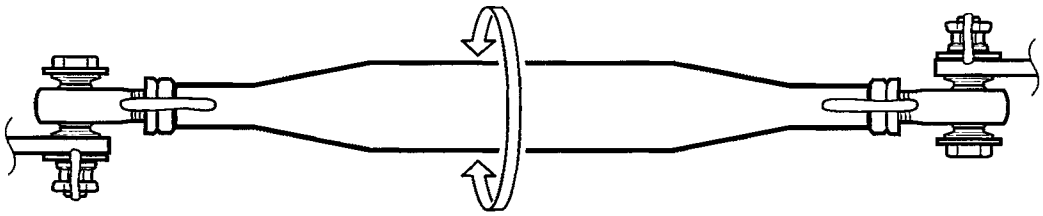

Position rod ends for maximum rotation

FIGURE 2-1A ROD END CENTERING

2.125 Elastomeric Bearings

Elastomeric bearings are used in the A062-1 tail rotor hub. Fatigue, oil contamination, or overload can degrade the elastomer.

Small surface cracks (fatigue cracks) and elastomer dust or "eraser crumbs" (see Figure 2-2A) are normal and are not causes for replacement. As cracks grow, enough elastomer will be lost to cause reduced stiffness and increased vibration. If deep (greater than 0.10 inch) cracks are present over more than 25% of elastomer face, replace bearing.

Avoid exposure to oil, grease, hydraulic fluid, cleaning solvent, and rust-preventative fluids. Immediately wash off any such contaminants with detergent and water. Contaminated bearings exhibit swelling, wavy edges, or debonding (see Figure 2-2B) and must be replaced.

Overload occurs when elastomer's tensile strength or rubber-to-metal bond strength is exceeded. This can occur when normal loads are applied to a bearing weakened by fatigue or oil contamination. Overload is indicated by large extrusions from and large clean cracks in elastomer as shown in Figure 2-2C.

Elastomer may also separate (debond) from metal bushings. If separation occurs over more than 25% of bonded area, replace bearing.

2.125 Elastomeric Bearings (cont'd)

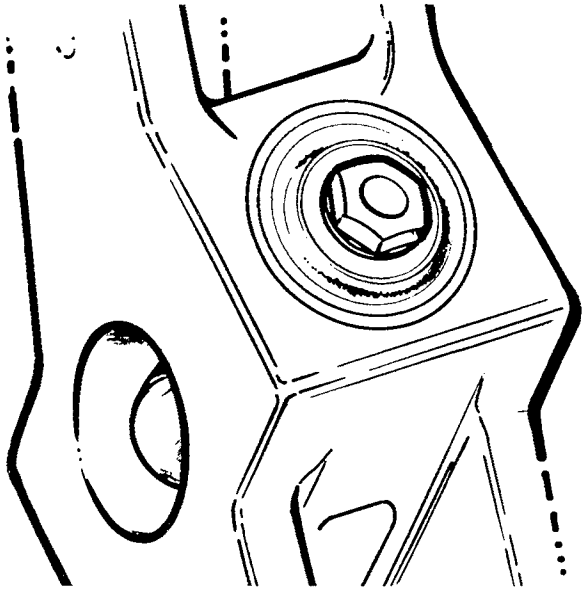

FIGURE 2-2A
ELASTOMER FATIGUE

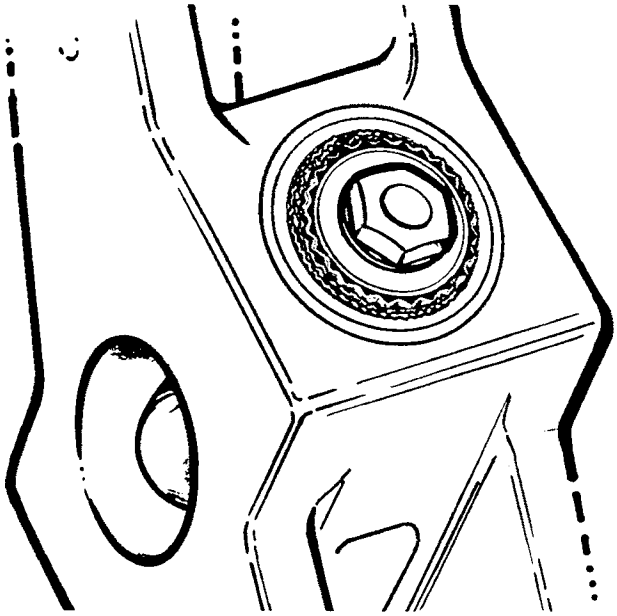

FIGURE 2-2B
ELASTOMER OIL CONTAMINATION

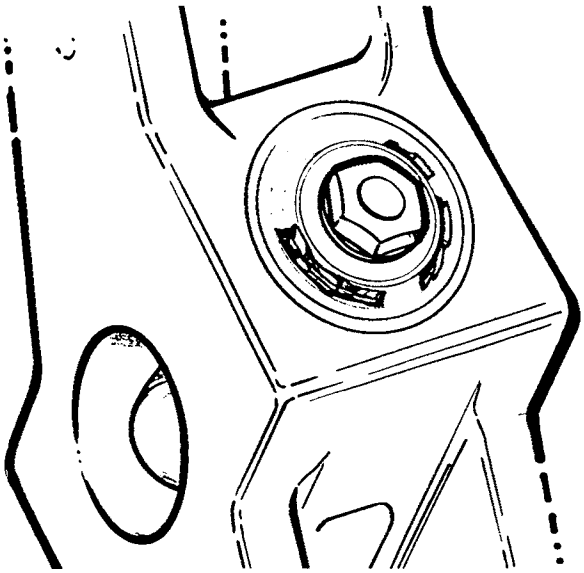

FIGURE 2-2C
ELASTOMER OVERLOAD

2.130 Telatemp Indicators

Self-adhesive Telatemp indicators record changes in operating temperatures of bearings and gearboxes. To use Telatemp, draw a reference line between the highest temperature square which has darkened during normal operation and the next undarkened square. During every check thereafter, determine if an additional square has blackened. If an indicated temperature increase cannot be accounted for by a change in operating conditions, carefully examine the component before further flight.

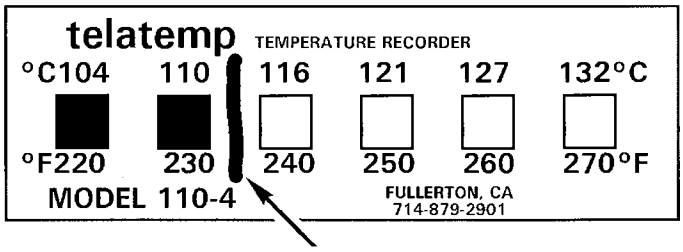

Reference line

Telatemp P/Ns & Temperature Ranges:
- 110-2 60 to 88°C (140 to 190°F)
- 110-4 104 to 132°C (220 to 270°F)

Telatemp Usage:
- 110-4 on A006-1 Main Rotor Gearbox
- 110-2 on A184-3 Upper Actuator Bearing (just aft of upper sheave)
- 110-2 on A181-4 Lower Actuator Bearing (just aft of lower sheave)
- 110-2 on A021-1 or B021-1 Tail Rotor Gearbox

2.200 GROUND AND FLIGHT CHECK FOR 100-HOUR/ANNUAL INSPECTION

Complete the following checklists in conjunction with a 100-hour or annual inspection. Note and correct any discrepancies.

2.205 Ground Check

1. **Throttle Control**: Check for freedom of rotation with collective full down and full up. _____
2. **Throttle Overtravel Spring**: Check by twisting throttle past idle position to override stop. Release throttle and ensure it returns immediately to normal idle position. _____
3. **Mixture Control**: Check for smoothness of operation with no binding. Check press-to-unlock button for proper function. Verify 0.03 to 0.10 inch spring-back at full rich position. _____
4. **Carburetor Heat Control**: Check for smoothness of operation with no binding. Verify 0.03 to 0.10 inch spring-back at full off position. _____
5. **Cyclic Control**: Check freedom through full travel with friction and right trim off. Verify friction knob rotates 1/8 to 1 turn clockwise before adding friction. Check full travel with friction and right trim on. Verify 10 pounds maximum friction measured laterally at grip with right trim off, friction on, and MR blade pitch links fore and aft. _____
6. **Collective Control**: Check freedom through full travel with friction off. Check freedom through full travel with friction on; friction should be 12 to 20 pounds measured at grip. _____
7. **Carb Heat Assist (if installed)**: With collective down and full carb heat, raise collective full up and verify carb heat off. Lower collective full down and verify carb heat full on. With collective friction off, push carb heat off and verify collective stays down. _____
8. **Tail Rotor Pedals**: Check for smooth operation with no binding. _____
9. **Removable Controls**: Verify security of attached fasteners. _____
10. **Lighting and Instruments**: Turn MASTER switch on and verify-
    a. Carbon Monoxide caution light blinks twice (if installed) _____
    b. Carb Air Temp approximately same as Outside Air Temp _____
    c. ALT caution light on _____
    d. OIL pressure warning light on _____
    e. Fuel quantity gages - indication of fuel level _____
    f. Navigation and panel lights - check function _____
    g. Strobe light - check function _____

2.205 Ground Check (cont'd)

10. Lighting and Instruments: Turn MASTER switch on and verify- (cont'd)

h. Landing lights - check function
(clutch switch must be Engaged to check landing lights) _____

i. Map light - check function _____

j. Ammeter - shows discharge _____

k. Oil temperature gage - slight needle deflection with engine cold _____

l Cylinder head temp gage - slight needle deflection with engine cold _____

m. MR CHIP light - on when sender shorted or test switch depressed _____

n. MR TEMP light - on when sender shorted or test switch depressed _____

o. TR CHIP light - on when sender shorted or test switch depressed _____

p. LOW FUEL light - on after approximately 1 second delay when low fuel sender in tank is depressed or when test switch depressed _____

2.210 Run Up

1. Perform preflight inspection per POH. _____

2. Turn MASTER switch on. Apply rotor brake and verify BRAKE light on. With brake applied, verify starter does not activate when key is turned to START position. _____

3. Start engine and run up using POH checklist, except leave cyclic and collective frictions on and governor off before proceeding. After engaging clutch switch, verify blades turn within 5 seconds and CLUTCH light extinguishes within 100 seconds. _____

4. Ammeter indicates charge, ALT light off. _____

5. Both magnetos ground (momentarily off) at 60% RPM. _____

6. Select alternator and battery switches off and verify-
   a. Engine and rotor tachometers operate. _____
   b. All warning/caution lights extinguished, indicating proper function of tachometer bus isolation diode. _____

7. No unusual bearing noise when varying RPM through operating range. Mechanic to listen near V-belt drive for symptoms of failing bearing as described in Section 2.110. _____

8. Set RPM at 75%, governor on, Increase to 85%, release throttle and verify governor increases RPM to 104% ± 1.5%. Increase RPM to 106%, release throttle, and verify governor decreases RPM to 104% ± 1.5%. _____

9. Engine and rotor tachometer needles within 1% of each other at 104% RPM. _____

10. Verify alternator voltage as follows: _____

    13.4 to 13.9 vdc for A942-3 alternator control unit
    13.0 to 13.7 vdc for A942-1 or -2 alternator control unit _____

11. Heater operates properly (if installed). _____

12. Tachometer needles do not jump more than 2% when transmitting on 118.00, 125.00, and 136.975 MHz with governor on. _____

13. Raise collective control 0.5 inch at grip and slowly decrease RPM. Verify low rotor RPM warning horn and light activate at 97 to 96% RPM and remain on as RPM is decreased to idle. _____

14. Idle RPM with engine warm, clutch engaged, throttle closed: 53 to 57%. _____

15. Idle mixture with engine warm, clutch disengaged, throttle closed: 2 to 4% RPM rise as mixture is pulled slowly to idle cut-off. Adjust idle mixture screw as required. If unable to obtain rise, set idle mixture screw to nominal position of 1½ turns out from full-in then adjust as required for smooth idle. _____

2.220 Flight Check

1. **Hover:**

   a. All gages green _____

   b. Controllability in left and right pedal turns _____

   c. Vibration levels _____

2. **Level flight**: Approximately 3000 feet density altitude (if possible), maximum continuous power, governor on, right trim on, frictions off.

   a. Vibration levels _____

   b. Longitudinal cyclic trim - cyclic does not creep forward or aft _____

   c. Lateral cyclic trim - cyclic does not creep left or right _____

   d. Collective spring - collective does not creep up or down _____

   e. Tail rotor pedal position - 0.0 to 0.5 inch left _____

2.300 AIRFRAME PREPARATION FOR 100-HOUR/ANNUAL INSPECTION

The airframe must be thoroughly cleaned prior to inspection in accordance with U.S. FAR 43, Appendix D, paragraph (a). Cleaning should include a wipe down of main and tail rotor blades, hubs, and airframe exterior with a mild soap and water solution. Refer to R22 POH Section 8 for cleaning instruction. Note any fluid leakage before cleaning.

CAUTION

Do not spray magnetos, main rotor hub, tail rotor gearbox vent, or swashplate area with high pressure water as water may enter and cause corrosion and breakdown of lubricants.

2.400 100-HOUR/ANNUAL AIRFRAME INSPECTION

Perform 100 hour or annual airframe inspections per Section 2.410. RHC recommends keeping a copy of the most recently performed checklist with the aircraft's maintenance records.

2.410 Inspection Procedures and Checklist

R22 Serial No.:	_____	Technician name:	_____
Registration No.:	_____	Technician	
Hourmeter Indication:	_____	Certificate number:	_____
Aircraft Total Time:	_____		

Numbers in parentheses indicate access location per Figures 2-3A and 2-3B.

1. **Remove Landing Light Retainer (1A)**

> NOTE
>
> Do not remove pedal bearing block cover plates (1B) unless function check of pedals indicates a problem with bearing blocks.

Landing Light Retainer and Support: Inspect condition. Verify support security. _____

Tail Rotor Pedal Bearing Blocks: Use an inspection light and mirror to inspect bearing blocks. Maximum allowable play is 0.050 inch axially and 0.020 inch radially. Verify security. _____

Tail Rotor Pedal Bearing Blocks Sheet Metal Supports: Use an inspection light and mirror to verify no cracks or fretting in bearing block vertical sheet metal supports. _____

Tail Rotor Pedals: Inspect condition. Verify no cracks. Verify security and operating clearance. _____

Push-Pull Tubes: Inspect condition. Verify no cracks at ends. Inspect rod ends per Section 2.120. Verify security and operating clearance. _____

Sheet Metal Structure: Inspect condition. Verify no corrosion. No cracks. _____

Battery Box (if installed in nose): Inspect drain attachment to battery box. Verify no electrolyte leakage. _____

Chin Area: Verify no loose equipment or debris. _____

Wiring: Inspect condition. Verify no loose, broken, or chafed wires. Verify neatness and security. _____

Fasteners & Torque Stripes: Inspect condition and verify security of all fasteners. Renew deteriorated torque stripes per Figure 2-1. _____

2.410 Inspection Procedures and Checklist (cont'd)

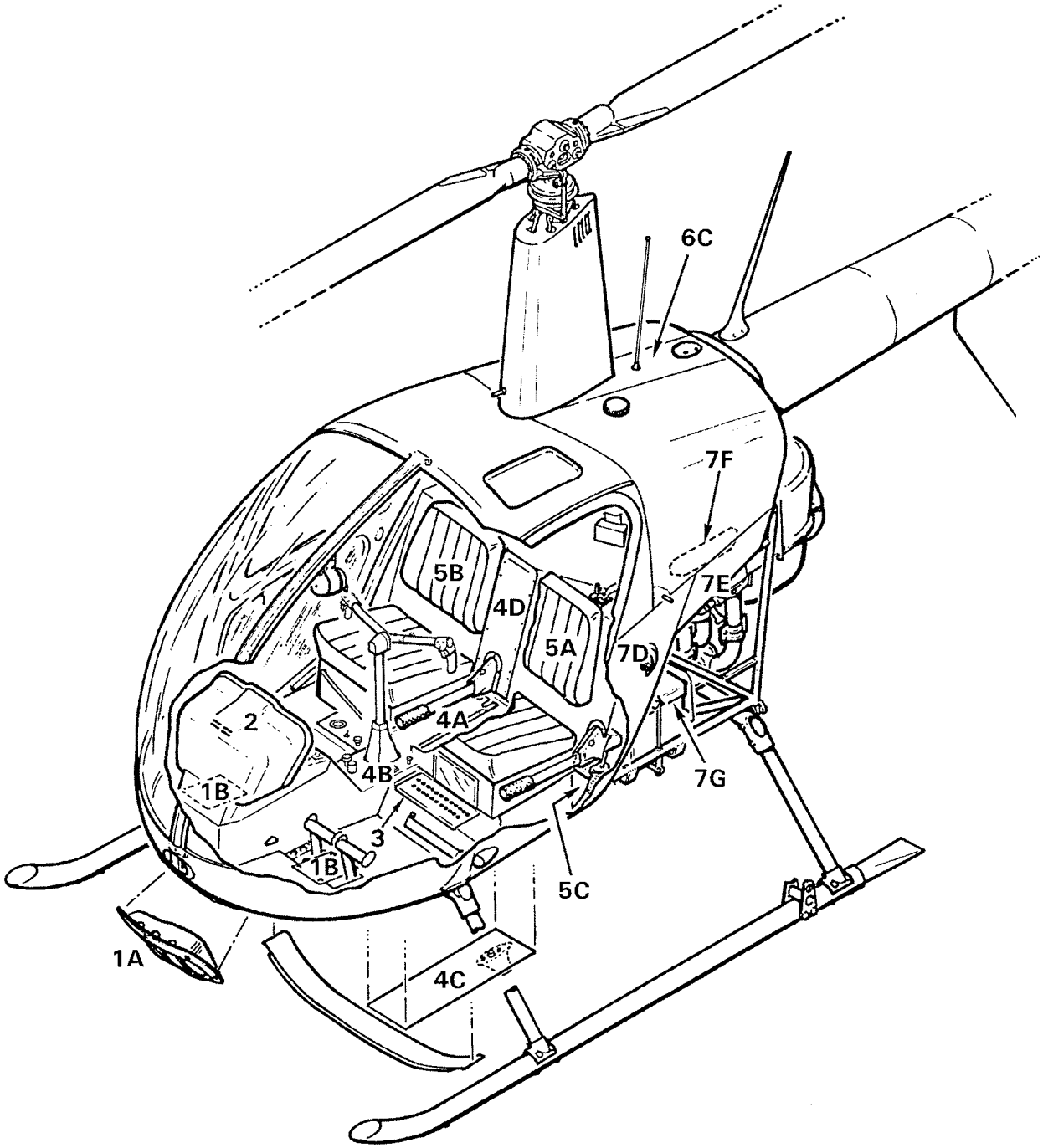

FIGURE 2-3A ACCESS COVERS AND INSPECTION PANELS

2.410 Inspection Procedures and Checklist (cont'd)

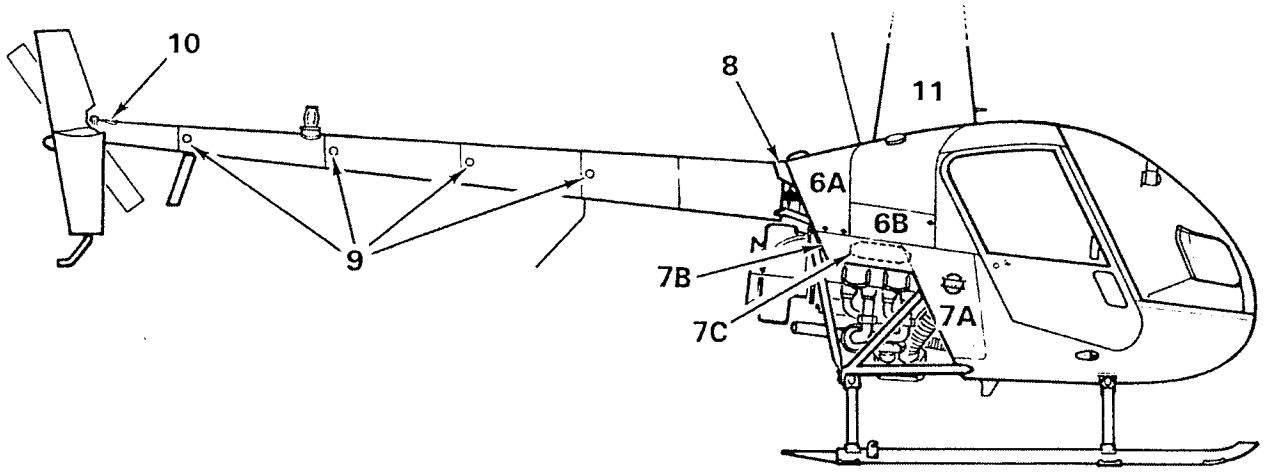

FIGURE 2-3B ACCESS COVERS AND INSPECTION PANELS

2. **Open Upper Console Assembly (2) or Lower Faceplate per Section 14.1020 (10-hole instrument console only)**

Upper Console Assembly: Inspect condition. Verify hinge security. _____

Instruments and Instrument connections: Inspect condition. Verify security. _____

Strobe Power Supply and Wiring (alternate locations – atop horizontal firewall or behind right seat back): Inspect condition. Verify no cracks in mounting area. Verify security. _____

B255-1 Bracket (10-hole instrument console only): Inspect condition of grommet and bracket contacting brace assembly between windshields. _____

Tail Rotor Push-Pull Tubes: Inspect condition of visible portions. Verify operating clearance. _____

Battery and Box (if installed in nose): Inspect condition. Check battery cell fluid level and specific gravity (non-sealed battery only). Verify security of connections. Verify no corrosion in surrounding structure. _____

Radio Tray(s): Inspect condition. Verify security. Verify no loose or poor wire connections. _____

Fasteners & Torque Stripes: Inspect condition and verify security of all fasteners. Renew deteriorated torque stripes per Figure 2-1. _____

2.410 Inspection Procedures and Checklist (cont'd)

3. Open Circuit Breaker Panel (3)

> **WARNING**
>
> **Ensure electrical system remains off while circuit breaker panel is open.**

Wiring: Inspect condition. Verify neatness, security, and no chafing. _____

Connections: Inspect condition. Verify security and no corrosion. _____

Circuit Breakers: Inspect condition. Verify security. Check airworthiness directive applicability. Verify red button (collar) on CLUTCH circuit breaker button. _____

Copper Bus Bars: Inspect condition. Verify no corrosion. Verify bus bars are not bent and will not contact surrounding structure. _____

Circuit Breaker Box Interior: Inspect condition. Verify cleanliness. _____

Close and Secure: Circuit breaker panel. _____

4. Remove Horizontal Cover (4A), Cyclic Box Cover (4B), Belly Panel (4C) and Vertical Panel (4D)

To remove cyclic box cover, unscrew trim adjustment knob, remove spring pin in cyclic friction knob, and, on ships equipped with carburetor heat assist, unscrew carburetor heat knob.

Covers: Inspect condition. Verify placard legibility. _____

Cyclic Box Assembly: Inspect condition. Verify no cracks, loose rivets or corrosion. Verify security. _____

Cyclic Stick Assembly: Inspect condition. Verify no cracks in weld areas. Verify security and operating clearance. Verify no more than 0.015 inch wear in plates at bottom of stick from A121-1 push-pull tube's forward rod end housing. _____

Cyclic Pivot (forward end of torque tube): Inspect condition. Inspect bearings per Section 2.120. Verify security and operating clearance. _____

Cyclic Right Trim: Rotate main rotor blades until pitch links are located fore and aft. Grip cyclic and activate right trim. Trim should produce a right cyclic stick force. Move cyclic stick fully left and verify right trim spring coils do not bind. Verify security and operating clearance. _____

2.410 Inspection Procedures and Checklist (cont'd)

4. **Remove Horizontal Cover (4A), Cyclic Box Cover (4B), Belly Panel (4C) and Vertical Panel (4D) (cont'd)**

Cyclic Friction: Inspect condition. Inspect rod ends per Section 2.120. _____

Cyclic Horizontal Push-Pull Tube: Inspect condition. Verify no cracks around reinforcement blocks at tube ends. Verify security and operating clearance. _____

Tail Rotor Horizontal Push-Pull Tubes: Inspect condition. Verify no cracks at ends. Inspect rod ends per Section 2.120. Verify security and operating clearance. _____

Tail Rotor Push-Pull tube Lower Bellcrank: Inspect condition. Verify security and operating clearance. _____

Mixture Cable: Verify security. _____

Carburetor Heat Cable: Verify security. _____

Carburetor Heat Assist Bellcrank (if installed): Inspect condition. Verify security and operating clearance. _____

Carburetor Heat Assist Push-Pull Tube (if installed): Inspect condition. Verify no cracks at ends. Inspect rod ends per Section 2.120. Verify security and operating clearance. _____

Pitot and Static Lines and Drains: Inspect condition. Verify no cracking, chafing, or kinking. Remove drain plugs from tee fittings in each line and drain any water. Install drain plugs. _____

Elastic Trim Cord: Remove trim cord assembly and stretch it. While stretched, check cord for voids which may indicate broken strands. Slide both hooks back and verify security of locking rings. Install cord. Verify operating clearance. _____

Fasteners & Torque Stripes: Inspect condition and verify security of all fasteners. Renew deteriorated torque stripes per Figure 2-1. _____

NOTE
Elastic trim cord is not required if cyclic does not need forward trim in cruise flight.

2.410 Inspection Procedures and Checklist (cont'd)

4. Remove Horizontal Cover (4A), Cyclic Box Cover (4B), Belly Panel (4C) and Vertical Panel (4D) (cont'd)

Electrical Wiring: Inspect condition. Verify no loose, broken, or chafed wires. Verify neatness and security. _____

Tail Rotor Vertical Push-Pull Tube: Inspect condition. Verify no cracks at ends. Inspect rod ends per Section 2.120. Verify security and operating clearance. _____

Cyclic Push-Pull Tubes: Inspect condition. Verify no cracks at ends. Inspect rod ends per Section 2.120. Verify security and operating clearance. Contact between A121-3 & -7 push-pull tube lower ends is permitted when cyclic stick is in aft corners of cyclic box. _____

Cyclic Bellcrank: Inspect condition. Verify security and operating clearance. _____

Cyclic Yoke (aft end of torque tube): Inspect condition. Inspect bearings per Section 2.120. Verify security and operating clearance. _____

Cyclic Fork (attaching bellcrank to collective stick): Inspect condition. Inspect rod end per Section 2.120. Verify security. Verify operating clearance. _____

Throttle Overtravel Spring: Inspect condition. Inspect rod ends per Section 2.120. Verify security and operating clearance. Contact between overtravel spring and A121-1 push-pull tube is permitted when cyclic stick is in forward right corner of cyclic box. _____

Collective Friction and Stop Assembly: Inspect condition. Verify no nicks, cuts, or scratches. Move collective up and down and verify no bending or binding. Verify security and operating clearance. _____

Collective Boot: Inspect condition. Verify no tears. Ensure tie string ends are tucked into boot (if installed - current production aircraft use Ty-raps to secure boot around collective stick). _____

Fasteners & Torque Stripes: Inspect condition and verify security of all fasteners. Renew deteriorated torque stripes per Figure 2-1. _____

2.410 Inspection Procedures and Checklist (cont'd)

5. Remove Seat Backs (5A & 5B) & Collective Spring Guard (5C under left seat)

Seat Backs and Collective Spring Guard: Inspect condition. Verify upholstery security. _____

Upper Frame Assembly: Inspect condition of visible portions. Verify security. _____

Electrical and Antenna Wiring: Inspect condition. Verify security. Verify no chafing. Check grommets for proper installation. _____

Pitot and Static Lines: Inspect condition. Verify no chafing or kinks. _____

Collective Stick Assembly: Inspect condition. Inspect bearings per Section 2.120. Verify security and operating clearance. Verify no cracks in welds. Verify security of removable stick (if installed). If applicable, verify A783-1 retainer is secured to collective stick with ty-raps per Figure 2-4. _____

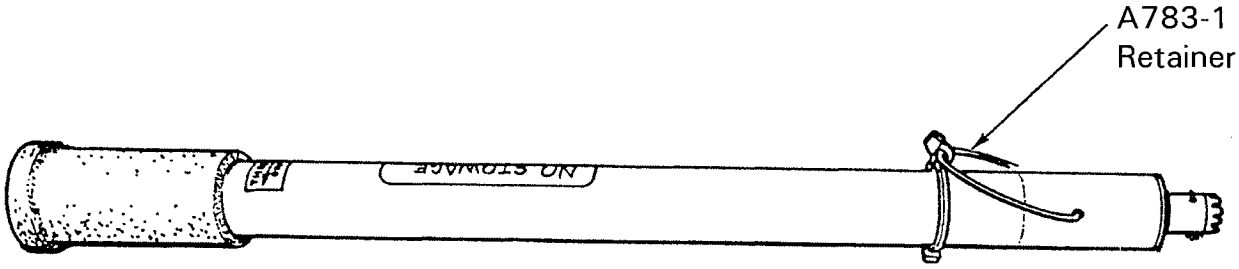

FIGURE 2-4 A783-1 RETAINER SECURITY

Throttle Connecting Rod: Inspect condition. Verify no cracks. Verify security and operating clearance. _____

Governor: Inspect condition. Inspect rod ends per Section 2.120. Verify security and operating clearance. Verify sufficient wiring slack with full up collective. _____

Collective Spring: Inspect condition. Inspect rod ends per Section 2.120. Verify no binding or roughness during operation. Verify lubrication of guide rods. Verify spring coils do not touch each other when collective is full down. Verify no elongation of lower cap guide rod holes. Verify security and operating clearance. _____

2.410 Inspection Procedures and Checklist (cont'd)

5. **Remove Seat Backs (5A & 5B) & Collective Spring Guard (5C under left seat)** (cont'd)

Firewall Drains: Inspect condition. Verify drains are unobstructed. Verify tubing clamps are not cutting tubing. Verify security. _____

Governor Controller and Wiring: Inspect condition. Verify security. _____

Main Fuel Tank Outlet & Fuel Line: Inspect condition. Verify no leakage. Verify security. Verify smooth operation of fuel valve. _____

Fuel Shut-Off Valve: Inspect condition. Verify no leakage. Verify security. Verify smooth operation of fuel valve. _____

Aux Fuel Tank Fuel Line: Inspect condition. Verify clearance to structure. Verify no leakage. Verify security. _____

WARNING

If helicopter is equipped with hexagonal-shaft fuel valve, verify correct assembly of fuel valve by performing Section 12.260 Fuel Flow Check after seatback and valve handle installation.

Fasteners & Torque Stripes: Inspect condition and verify security of all fasteners. Renew deteriorated torque stripes per Figure 2-1. _____

6. **Open Cowling Door(s) (6A & 6B) & Remove aft Cowling (6C)**

Cowling Doors: Inspect condition. Verify proper operation of fasteners. _____

Electrical Wiring: Inspect condition. Verify no loose, broken, or chafed wires. Verify neatness and security. _____

Actuator Fuse(s) and Holder(s): Inspect condition. Verify no corrosion. Verify correct AGC-1½ fuse(s), twist-to-lock function, and security. _____

Antennas and Connections: Inspect condition. Verify security of antenna(s) and antenna connection(s). _____

Emergency Locator Transmitter (if installed): Inspect condition. Verify security. If applicable, comply with U.S. FAR 91.207 (d). _____

Pitot Line and Static Vent: Inspect condition. Verify no chafing, kinks, or tight bends. Verify static vent is clean and unobstructed. _____

Fuel Tanks: Inspect condition of visible portion. Verify no leaks. Verify security. Check interior for foreign objects and cracks in baffle. _____

Aux Fuel Tank Fuel Line: Inspect condition. Verify clearance to structure. Verify no leakage. Verify security. _____

Fuel Gage Sender(s) and Wiring: Inspect condition. Verify no fuel leaks. _____

2.410 Inspection Procedures and Checklist (continued)

6. Open Cowling Door(s) (6A & 6B) & Remove Aft Cowling (6C) (continued)

Fuel Tank Sump Drain(s): Inspect condition. Verify drain valve(s) open easily, drain fuel freely, spring closed, and seal completely. _____

Low Fuel Warning: Turn battery on. With a clean wooden dowel, gently depress low fuel sender float in main fuel tank and verify LOW FUEL warning light illuminates after approximately 1 second delay. Turn battery off. _____

Fuel Cap(s): Refer to Figure 2-4A. Verify A689-6 fuel cap is revision J or subsequent if bladder tanks are installed. Inspect condition. Verify no deterioration of gasket(s). Verify security when closed. Refer to R22 SB-107; verify cap decal is legible and properly installed, and alignment marks on cap and tank align when cap is fully closed. _____

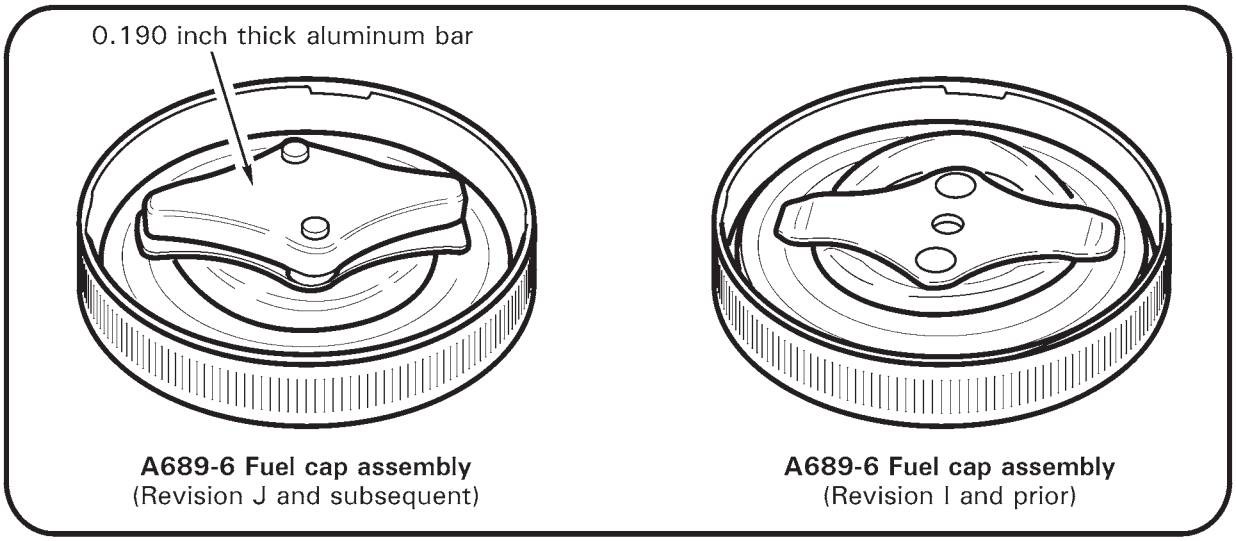

FIGURE 2-4A A689-6 FUEL CAPS

Collective Jackshaft Supports: Inspect condition. Inspect rod ends per § 2.120. Verify no cracks or corrosion. Verify strut ends are sealed. Verify security. _____

Collective Jackshaft: Inspect condition. Verify no cracks or corrosion. If open type, verify no internal corrosion. Verify security. Verify operating clearance. _____

Swashplate Push-Pull Tubes: Inspect condition of visible portions. Verify no cracks at ends. Inspect rod ends per § 2.120. Verify no tears in, or wear through, heat-shrink sleeves on forward push-pull tubes. Verify security and operating clearance. _____

Push-Pull Tube Guides or Rollers: Inspect condition. Verify cleanliness, no wear into metal, and free movement of rollers. Verify security. _____

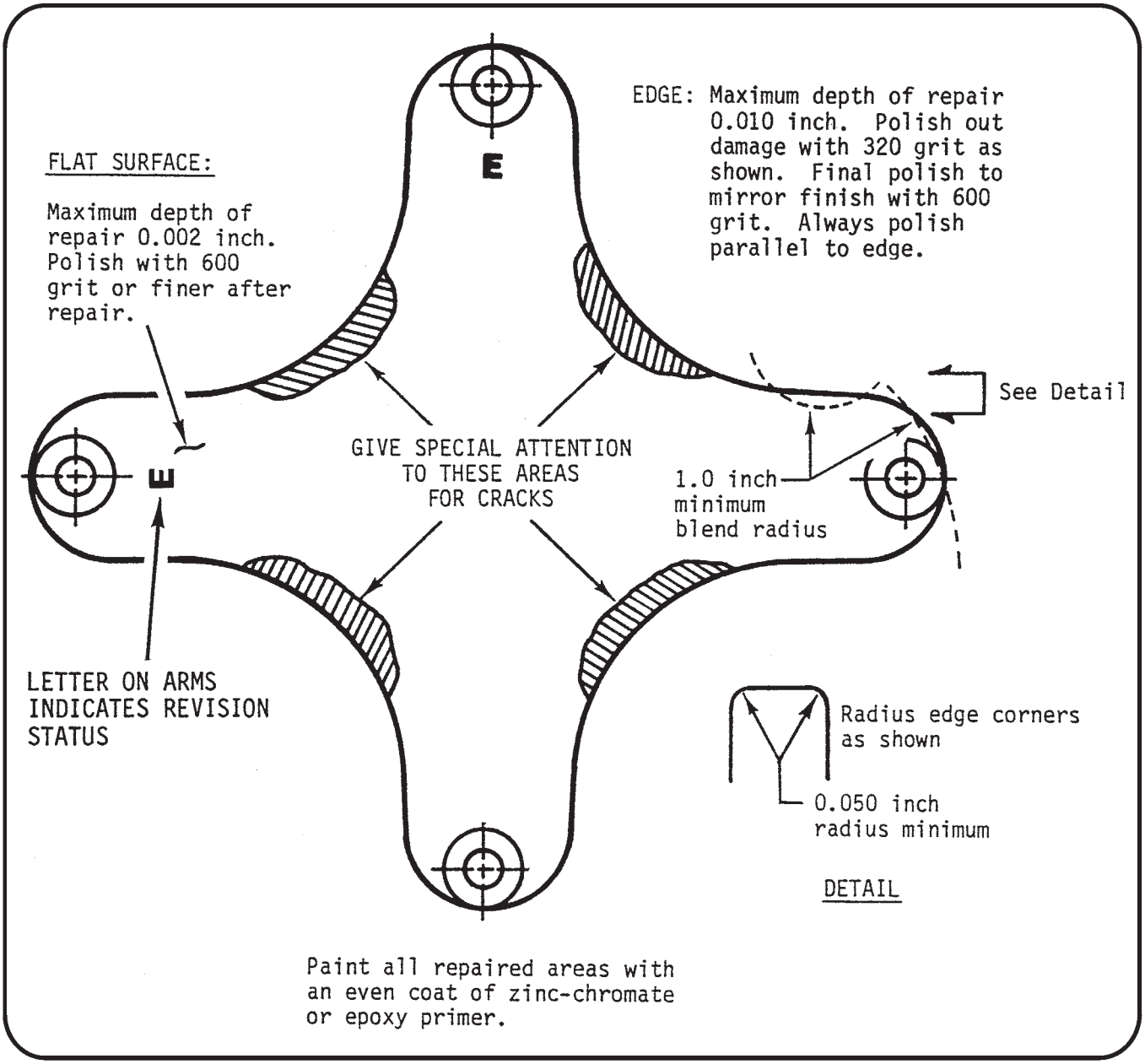

FIGURE 2-4B A947-1 FLEX PLATE INSPECTION AND REPAIR LIMITS

2.410 Inspection Procedures and Checklist (continued)

6. Open Cowling Door(s) (6A & 6B) & Remove Aft Cowling (6C) (continued)

Tail Rotor Push-Pull Tube and Bellcrank (at forward end of A121-15 push-pull tube): Inspect condition. Inspect rod ends per § 2.120. Verify no cracks in tube ends. Verify no cracks at bellcrank sheet metal mounting. Verify security and operating clearance. _____

Main Rotor Gearbox Cooling Air Duct and Nozzle: Inspect condition. Verify security. Verify no rips, holes chafing, or obstructions. Inspect condition and verify security of horizontal firewall grommet around duct. _____

2.410 Inspection Procedures and Checklist (continued)

6. Open Cowling Door(s) (6A & 6B) & Remove Aft Cowling (6C) (continued)

Main Rotor Gearbox: Inspect condition, especially gearbox mounts, static mast tube-to-gearbox attachment, and mast tube lower casting (if applicable). Inspect Telatemp per § 2.130. Verify proper oil level with no leakage. Verify security. Verify security of Hall Effect senders. _____

NOTE

At 500 hours time in service or annually, whichever occurs first, remove chip detector and clean any varnish accumulation from detector's magnetic probe and adjacent metal body (a toothbrush dampened with solvent works well). Also, drain and flush gearbox at intervals not to exceed 500 hours time in service (refer to § 1.120).

Rotor Brake: Inspect condition, including activating cable & pulley and microswitch. Verify integrity of brake pads and 0.030 inch minimum pad thickness. Verify brake pad clearance to input yoke when brake is off. Verify security and operating clearance. _____

MRGB Input Yoke: Inspect condition. Verify security and operating clearance. Verify security of magnets. _____

Forward Flex Plate: Inspect condition, particularly edges. Verify security. See Figure 2-4B for A947-1 plate inspection and repair limits. Verify bonded washers are securely bonded to both sides of each flex plate arm. Verify operating clearance. _____

WARNING

A193 flex plates, which do not have bonded washers, are obsolete and must be replaced with A947 flex plates having bonded washers. If a bonded washer separates from an A947 flex plate, flex plate is unairworthy and cannot be repaired. Ensure A947-1 forward flex plate is Rev E or subsequent (identified by letter, "E" or subsequent letter, on two adjacent arms of flex plate).

Clutch Shaft Forward Yoke: Inspect condition. Verify no cracks, corrosion, or fretting. Verify security and operating clearance. _____

Clutch Assembly: Inspect condition. Verify no oil leakage. Verify no clutch shaft corrosion, especially at shaft-to A966-1 seal junctures. Remove any light surface corrosion at shaft-to-seal junctures and apply wax or suitable corrosion preventative compound. Verify no cracks in seal retainer plates. _____

NOTE

Clutch assembly lubricant inspection and servicing (§ 7.214) is recommended every 500 hours time in service.

2.410 Inspection Procedures and Checklist (continued)

6. Open Cowling Door(s) (6A & 6B) & Remove Aft Cowling (6C) (continued)

Upper Sheave: Inspect condition. Verify smoothness of drive belt contact surfaces. Replace any sheave having corrosion, pitting, flaking, roughness, sharp ridges, wear through anodized coating, or blistering of optional metalized coating. _____

Upper Steel Tube Frame: Inspect condition. Verify no cracks or corrosion. If corrosion is found, inspect and repair per § 2.560. Use an inspection light and mirror to inspect all parts of each weld. _____

> **CAUTION**
>
> Upper steel tube frame is fatigue loaded and therefore susceptible to fatigue cracks. Inspect all joints very thoroughly.

Horizontal Firewall: Inspect condition, especially where bolted to steel structure. Verify no cracks, buckling, or wrinkles. _____

Cabin Aft Bulkhead: Inspect condition. Verify no corrosion, loose rivets, deformation, or cracks. _____

Fasteners & Torque Stripes: Inspect condition and verify security of all fasteners. Renew deteriorated torque stripes per Figure 2-1. _____

7. Remove Side Skirts (7A, 7B, 7D, & 7E), Spark Plug Access Covers (7C & 7F), and Battery Box Cover (7G, alternate location under upper console or left seat)

Engine: Refer to Lycoming Operator's Manual (Lycoming P/N 60297-12 or 60297-16, as applicable) Sections 4 and 5 and Lycoming SI 1080 (current revision) for 100-hour or annual inspection and service procedure. _____

Muffler: Open heater shroud (if installed). Inspect muffler condition. Verify no cracks or ruptures. Pay particular attention to tail pipe and riser attachment areas, welds, clamps, riser flanges and gaskets. Verify no internal obstructions. _____

Muffler Leak Check: Pressurize muffler with low pressure air and inspect for leakage by applying soapy water to exterior and looking for air bubbles. Verify security. _____

> **WARNING**
>
> **Exhaust system failure can result in carbon monoxide poisoning, partial loss of power, or fire.**

Heater Shroud (if installed): Inspect condition. Close and secure shroud and connect hoses. _____

Engine Cooling Panels: Inspect condition. Pay particular attention to panel attached to oil cooler and panel attached to alternator cooling hose. Verify no cracks or missing or loose fasteners. Verify security. _____

2.410 Inspection Procedures and Checklist (continued)

7. Remove Side Skirts (7A, 7B, 7D, & 7E), Spark Plug Access Covers (7C & 7F), and Battery Box Cover (7G, alternate location under upper console or left seat) (continued)

Alternator & Pulley: Inspect condition. Verify steel pulley (use magnet); aluminum pulley is not approved. Verify security. _____

Alternator Wiring: Inspect condition. Verify no evidence of arcing. Verify security of output, aux, and field terminal studs. Verify no damage to insulating spacer at output stud. Verify wiring security. _____

Alternator Belt: Inspect condition. Replace belt if there are any cracks, missing teeth or delamination. Check tension per Lycoming Service Instruction 1129 (current revision). Verify proper belt alignment. _____

Emergency Spare Alternator Belt: Remove if installed. _____

Alternator Cooling Hose: Inspect condition. Verify no obstructions or holes. Verify security. _____

Vertical Firewall: Inspect condition. Verify no cracks, buckling, or wrinkles, especially around structural attachment points. _____

Lower Steel Tube Frames: Inspect condition. Verify no corrosion or cracks, especially at welds. If corrosion is found, inspect and repair per § 2.560. Verify proper torque (see § 1.320) and safety wiring of drilled-head bolt at lower left frame-to-cabin-belly attachment. _____

Engine Mounts: Inspect condition. Verify security. Replace rubber mounts exhibiting significant deflection or other than superficial cracks. _____

Throttle Control: Verify carburetor butterfly bellcrank contacts idle rpm adjustment screw with collective full down and throttle grip at idle position. Verify bellcrank contacts full-open stop when throttle is opened with collective half-up. Inspect rod end per § 2.120. Verify operating clearance, especially at vertical firewall. _____

Throttle Correlation Rigging: Check per § 10.150 and adjust as required. _____

Full Throttle Switch Rigging: Check per § 14.1220 and adjust as required. _____

Carburetor Mixture Control: Verify carburetor mixture control moves carburetor mixture control arm stop to stop. Inspect condition and verify security of mixture control cable clamp(s) on air box bracket; push and pull cable housing to ensure it does not slip in clamp(s). Inspect condition and verify security of mixture control cable inner wire attachment to carburetor mixture control arm. Ensure freedom of rotation between mixture control arm and inner wire retention fitting (bolt) when arm moves. Verify mixture control safety spring is properly installed (so spring force moves mixture control arm to full-rich position if inner wire breaks).

Engine Electrical Wiring, Alternator Control Unit: Inspect condition. Verify no wire chafing. Inspect connections. Verify security and no corrosion. _____

2.410 Inspection Procedures and Checklist (continued)

7. Remove Side Skirts (7A, 7B, 7D, & 7E), Spark Plug Access Covers (7C & 7F), and Battery Box Cover (7G, alternate location under upper console or left seat) (continued)

Oil Lines & Elbows: Inspect condition. Verify clearance and no cracks or abrasions. Wires, ty-raps, and structure must not contact lines. _____

Oil Line Clamps: Inspect condition. Verify no broken clamps. _____

Oil Cooler: Inspect condition. Verify no cracks or leakage. Verify security. Verify airflow path through cooling fins is unobstructed. _____

Gascolator: Inspect condition. With fuel valve in OFF position, remove and clean gascolator bowl and filter screen. Reinstall bowl, turn fuel valve ON. Safety wire retainer after ensuring no leakage. Verify drain valve opens easily, drains fuel freely, springs closed, seals completely, and is torque-striped per § 1.310. _____

Fuel Hose: Inspect condition, verify security, clearance, no cracks, abrasion or leakage. _____

Carburetor Air Box: Open air box. Inspect condition. Verify free movement of disk in drain valve (not applicable to Mariners). Verify security. If installed, verify free movement and full closure of spring-loaded alternate air door. _____

Carburetor Heat Valve: Verify carburetor heat control fully opens and closes slider valve. Inspect condition and verify security of carburetor heat cable clamp on air box. Inspect condition and verify security of carburetor heat control cable inner wire attachment to slider valve. _____

Air Filter: Clean B771-1 air filter per § 6.435. Close and secure air box. _____

Carburetor Air Inlet Hose: Inspect condition. Verify no obstructions, leakage, or chafing. Verify security. _____

Carburetor Heat Scoop and Hose: Inspect condition. Verify security. Verify no obstructions, leakage, chafing, or scoop cracks. _____

Heater Hoses (if installed): Inspect condition. Verify security and no obstructions, leakage, or chafing. Verify security. _____

Battery, Battery Cables, and Battery Box (alternate locations under upper console or left seat): Inspect condition. Check each battery cell electrolyte for quantity and specific gravity (non-sealed batteries only). As required, perform capacity test or replace battery per manufacturer's instructions. Verify battery cable security and no cracked or corroded terminals. Verify security of, and no obstructions in, battery box drain tube (if installed). _____

Fasteners & Torque Stripes: Inspect condition and verify security of all fasteners. Renew deteriorated torque stripes per Figure 2-1. _____

2.410 Inspection Procedures and Checklist (continued)

8. Remove Tailcone Fairing (8)

Tailcone Fairing: Inspect condition. _____

Upper Steel Tube Frame: Inspect condition. Verify no cracks or corrosion. If corrosion is found, inspect and repair per § 2.560. Use an inspection light & mirror to inspect all parts of each weld. _____

> **CAUTION**
>
> Upper steel tube frame is fatigue loaded and therefore susceptible to fatigue cracks. Inspect all joints thoroughly.

Tailcone-to-Upper Frame Attachment: Inspect condition. Verify security. _____

Upper Frame Protective Clamp: Inspect clamp protecting right side upper frame tube from drive belt contact; replace if wear has penetrated clamp. If clamp is not installed, verify no more than 0.0049 inch wear into frame tube due to drive belt rubbing. Protective clamp may be installed per Figure 2-4C on any R22 if desired. _____

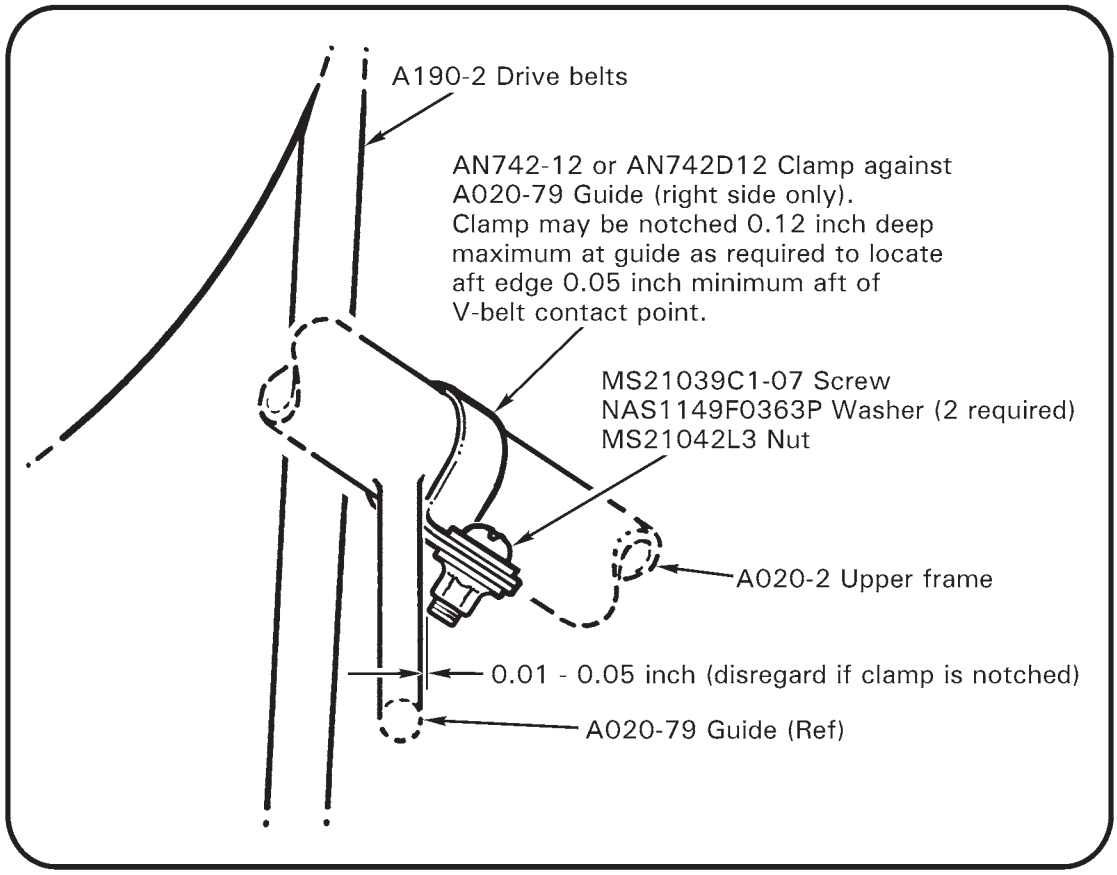

FIGURE 2-4C UPPER FRAME PROTECTIVE CLAMP INSTALLATION
(View looking forward)

2.410 Inspection Procedures and Checklist (continued)

8. Remove Tailcone Fairing (8) (continued)

Actuator Upper Bearing: Inspect condition. Verify no more than 0.060 inch axial play. Verify no fretting between bearing inner race and clutch shaft. Verify bearing inner race has not slipped relative to clutch shaft. Inspect Telatemp per § 2.130. Perform § 2.501 bearing inspection if unexplainable Telatemp increase has occurred. _____

CAUTION

A184 bearing requires periodic lubrication per § 1.101.

Actuator Upper Bearing Lubrication: Perform as required. _____

Clutch Lateral Centering Strut Assembly: Inspect condition. Inspect rod ends per § 2.120. Verify security. _____

Intermediate Flex Plate and Yokes: Inspect condition. If fretting is detected, replace flex plate. Verify no cracks in yoke welds. Verify security. Verify operating clearance (0.25 inch minimum to tail rotor controls with actuator disengaged). _____

Tail Rotor Push-Pull Tubes and A331-1 Bellcrank: Inspect condition. Verify no cracks at tube ends. Inspect rod ends per § 2.120. Verify security and operating clearance. _____

Drive V-Belts: Inspect per § 2.507. _____

Fanshaft: Inspect condition. Perform 360° visual inspection of exposed fanshaft for cracks. Verify security and safety wiring of attaching bolts. _____

Actuator Lower Bearing: Inspect condition, verify bearing inner race has not slipped relative to fanshaft. Inspect Telatemps per § 2.130. Perform § 2.501 bearing inspection if unexplainable Telatemp increase has occurred. _____

CAUTION

A181-4 bearing requires periodic lubrication per § 1.101.

Actuator Lower Bearing Lubrication: Perform as required. _____

Lower Bearing Brackets: Verify no looseness or cracking in A185 brackets which secure actuator lower bearing to scroll. _____

Fiberglass Scroll: Inspect condition. Verify no damage to vane assembly in upper right scroll. Verify security. Verify drain hole is unobstructed. _____

Scroll Metal Inlet Lips & Gap (if installed): Inspect condition. Verify 0.020 to 0.100 inch gap between lips and fanwheel inlet. (Attach holes in lips may be elongated to facilitate gap adjustment.) _____

Fanwheel Assembly: Inspect condition. Verify no cracks or corrosion. Check leading edge of vanes for damage. Verify alignment of roll pin and slippage marks on fanwheel. If marks and roll pin do not align, remove fanwheel and inspect hub and shaft for damage. Verify security. _____

2.410 Inspection Procedures and Checklist (cont'd)

8. Remove Tailcone Fairing (8) (cont'd)

Actuator (A051-1): Turn master switch on and engage clutch switch. While actuator is engaging, depress extension limit switch lever and verify gear motor stops; release lever and verify gear motor resumes running. Use an inspection mirror to observe column springs at end of belt-tensioning cycle; springs should snap outward simultaneously. Verify maximum engaged extension limit per Figure 7-15 is not exceeded. Verify security of attachment to A181 and A184 bearings. Verify gear motor security and minimum 0.030 inch clearance to upper frame. _____

Actuator Spring Switches: Check using either of following two methods, as appropriate:

Method 1 - (actuator electrical harness must be equipped with "Test" plug)

> **CAUTION**
>
> When using MT558-1 plug assembly (see Figure 2-5), if gear motor does not shut off when column springs snap outward then spring switch has failed in closed position; immediately remove MT558-1 to prevent actuator damage.

a. Disengage actuator. Connect one end of MT558-1 to actuator test plug. Engage actuator and verify gear motor shuts off when column springs snap outward. _____

b. Disengage actuator. Connect opposite end of MT558-1 to actuator test plug. Engage actuator and verify gear motor shuts off when column springs snap outward. _____

c. MT558-1 pins 1-2 jumper tests the wire 98 spring switch; the pins 2-3 jumper tests the wire 91 spring switch (see Figure 14-4A). If either switch does not function properly, replace switch section per Section 7.551 before further flight. _____

Method 2 - (use if actuator electrical harness is not equipped with "Test" plug)

a. Refer to Figure 2-5A. Depress column springs on one side of actuator until springs snap inward (use large screwdriver or similar tool with several layers to tape over end to protect actuator). Hold springs inward for at least one second. Actuator motor should not run. If motor starts, allow motor to run approximately two seconds, then release pressure on column springs. Depress column springs again. If motor starts again, opposite spring switch does not function properly. _____

b. Disengage and re-engage actuator. Repeat step a. on opposite-side column springs. _____

c. If either switch does not function properly, replace switch per Section 7.551 before further flight. _____

2.410 Inspection Procedures and Checklist (cont'd)

8. **Remove Tailcone Fairing (8)** (cont'd)

Lower Sheave: Inspect condition. Verify smoothness of drive belt contact surfaces. Remove any surface corrosion and refinish with approved primer. Replace any sheave showing corrosion-pitting or flaking of metalized coating, roughness, or sharp ridges. _____

Engine Height: Check per Section 6.130 and adjust as required. _____

Clutch Shaft Angle: Check per Section 7.240. Replace drive belts as required. _____

Sheave Alignment: Check per Section 7.230 and adjust as required. _____

Throttle Correlation Rigging: Check per Section 10.150 and adjust as required. _____

MT558-1

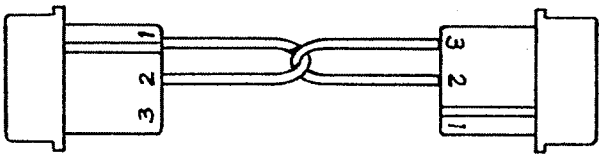

FIGURE 2-5

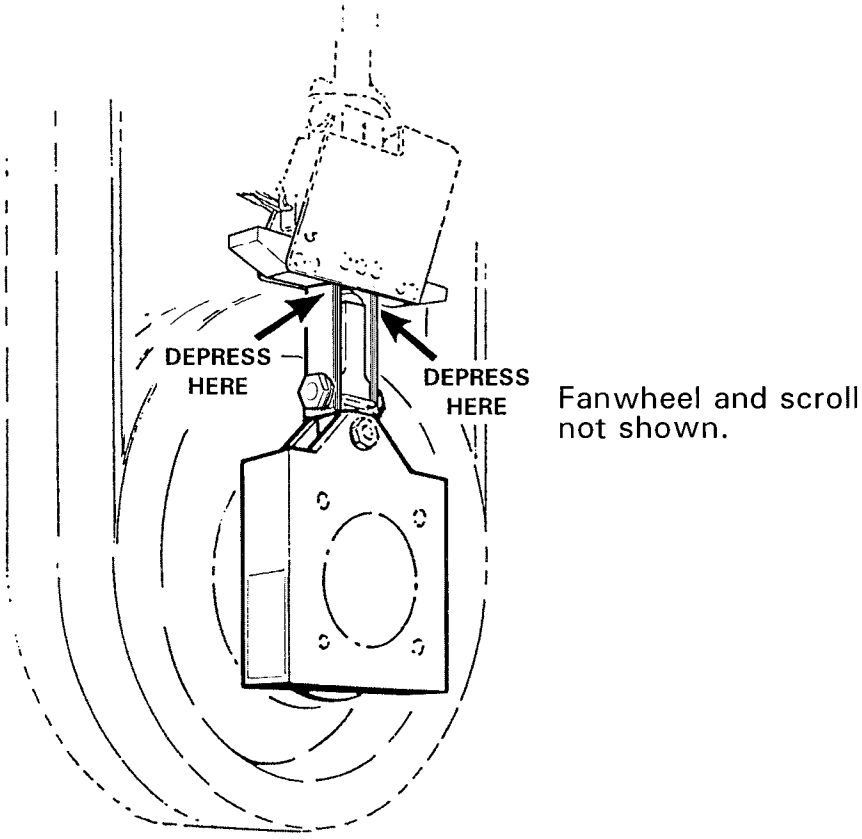

FIGURE 2-5A ACTUATOR FUNCTION TEST

2.410 Inspection Procedures and Checklist (cont'd)

8. **Remove Tailcone Fairing (8)** (cont'd)

Fasteners & Torque Stripes: Inspect condition and verify security of all fasteners. Renew deteriorated torque stripes per Figure 2-1. _____

9. **Remove 4 Tailcone Inspection Covers (9)** : Verify nutplate self-locking feature when removing. _____

Inspection Covers: Inspect condition. _____

Tail Rotor Drive Shaft: Inspect condition. Verify no cracks, bends, or contact with inside of tailcone. Refer to Figure 7-12C for corrosion limitations. Check runout per Section 7.340. _____

Tail Rotor Push-Pull Tube: Inspect condition. Inspect rod ends per Section 2.120. Verify wear does not exceed Section 2.120 limits. Verify no cracks in ends. Verify operating clearance. Verify tail rotor guard mounting screw shanks clear push-pull tube. _____

Damper: Inspect condition. Verify security. Verify bearing housing wear is within Figure 2-6 limits. _____

Tailcone Interior: Inspect condition. Verify no loose rivets or corrosion. Verify no excessive wear in tail rotor push-pull tube bushings. Verify no cracks, especially at damper-to-tailcone attachment. _____

Lower, Whip Antenna (if installed): Remove four screws securing antenna mounting plate to tailcone. Verify no cracks or corrosion on mounting plate or tailcone mount. Inspect antenna and wiring condition. Install antenna. Verify security. _____

Upper Antenna(s) (if installed): Inspect antenna and wiring condition. Verify security and no cracks at attachment to tailcone. _____

Tailcone Exterior: Inspect condition. Refer to Figures 2-7A and 2-7B for dent and scratch limits. Verify no cracks, corrosion, fretting between skin joints, or loose rivets. Verify drain hole at forward edge of each bay (except forward) is unobstructed. _____

Tail Rotor Visual Warning Guard: Inspect condition. Verify no cracks or corrosion, especially at tailcone attachment. Verify security. _____

Strobe Light: Inspect condition. Verify cleanliness and security. _____

Fasteners & Torque Stripes: Inspect condition and verify security of all fasteners. Renew deteriorated torque stripes per Figure 2-1. _____

2.410 Inspection Procedures and Checklist (cont'd)

9. Remove 4 Tailcone Inspection Covers (9) (cont'd)

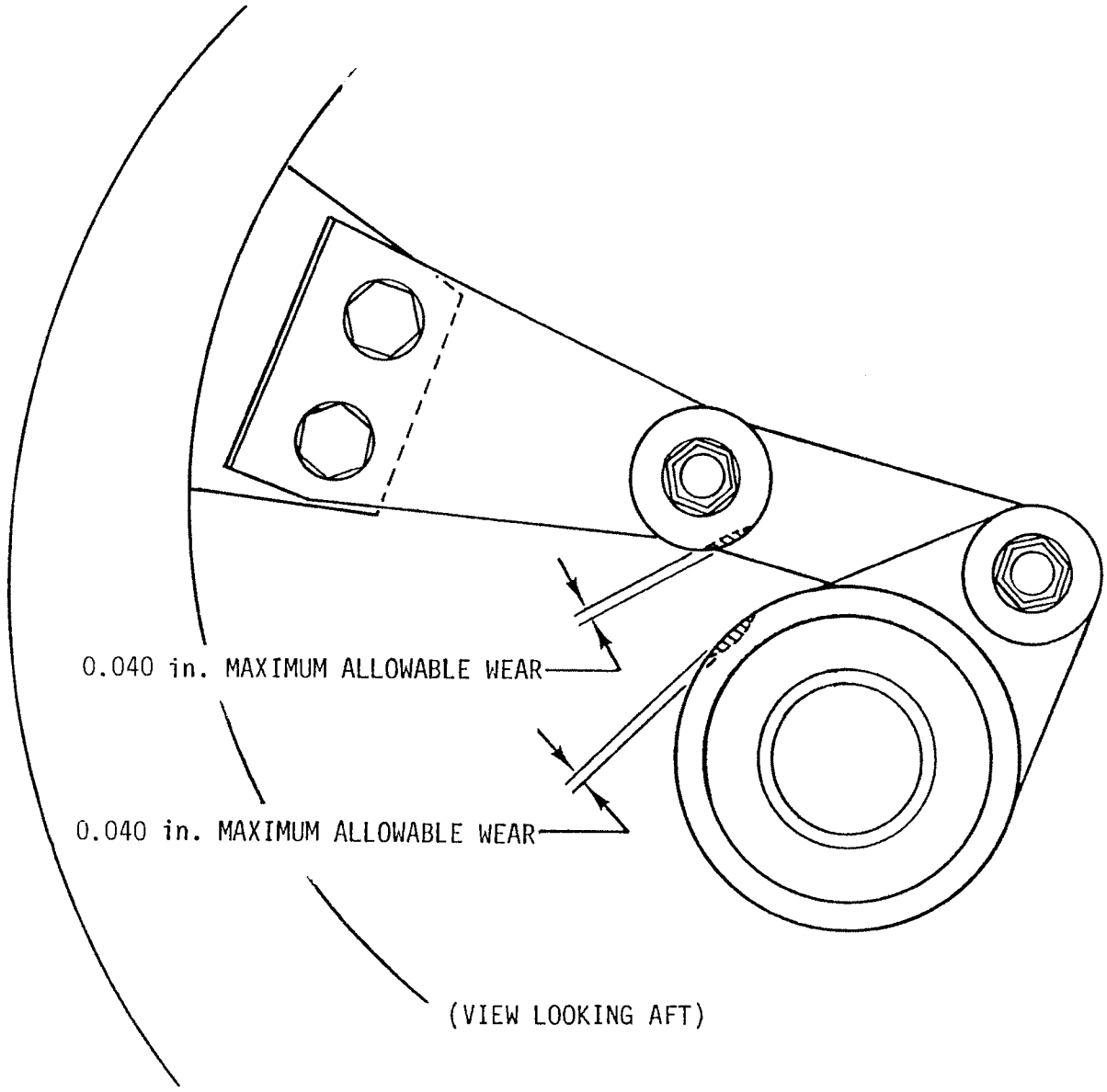

FIGURE 2-6 DAMPER BEARING HOUSING WEAR LIMITS

2.410 Inspection Procedures and Checklist (cont'd)

9. Remove 4 Tailcone Inspection Covers (9) (cont'd)

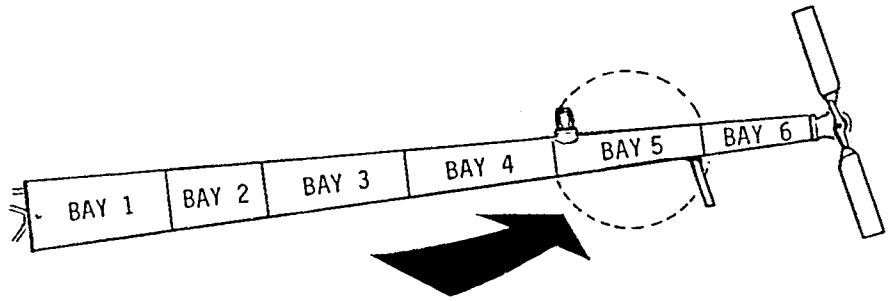

FIGURE 2-7A TAILCONE DENT LIMITS

BAY 5:

0.00 to 0.10 inch deep — No repair required provided 4 inches minimum between dented stations.
0.10 to 0.25 inch deep — Repair per Section 4.314
Greater than 0.25 inch deep — Replace bay (requires return to RHC)

ANY OTHER BAY:

Dents with 0.030 inch maximum depth, 1.25 inch maximum diameter, and 0.125 inch minimum bottom radius are acceptable if there is no more than one dent per station with 4 inches minimum between dented stations. Otherwise, replace tailcone or return to RHC for repair

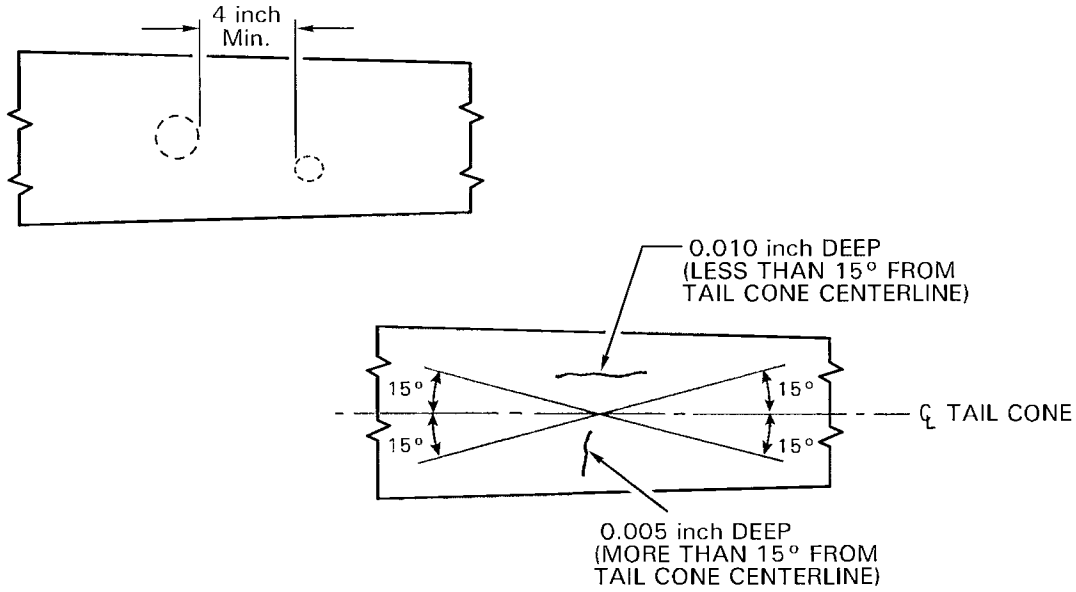

FIGURE 2-7B TAILCONE SCRATCH LIMITS

Allowable scratch depth varies with scratch angle to tailcone centerline as shown. For scratches within these limits, polish out scratches using 320-grit or finer abrasive paper and minimum 0.10 inch blend radius. Polish parallel to tailcone long axis. If scratches exceed limits, replace tailcone or return to RHC for repair.

2.410 Inspection Procedures and Checklist (cont'd)

10. Remove Plastic Cover (10)

Plastic Cover: Remove and clean. Inspect condition. Replace as required and install. Verify nutplate self-locking feature when installing. _____

Empennage: Inspect condition. Verify security. Verify no cracks or loose fasteners. Verify lower vertical stabilizer and tail skid drain holes are unobstructed. Refer to special inspection section for tail skid strike inspection criteria. _____

Aft Navigation Light: Inspect condition. Verify cleanliness, clear lens, and security. _____

Aft Flex Plate: Inspect condition. Verify no fretting, cracks, or distortion. Verify security and operating clearance. _____

WARNING

A193 flex plates, which do not have bonded washers, are obsolete and must be replaced with A947 flex plates having bonded washers. If a bonded washer separates from a A947 flex plate, flex plate is unairworthy and cannot be repaired.

Tail Rotor Gearbox: Inspect condition, including seals. Verify proper oil level and no leakage. Verify security and safety wire integrity. Verify output shaft cleanliness. _____

NOTE

At 500 hours time-in-service or annually, whichever occurs first, remove chip detector and clean any varnish accumulation from detector's magnetic probe and adjacent metal body (a toothbrush dampened with solvent works well). Drain and flush gearbox at intervals not to exceed 500 hours time-in-service (ref Section 1.130).

2.410 Inspection Procedures and Checklist (cont'd)

10. Remove Plastic Cover (10) (cont'd)

Tail Rotor Pitch Control Assembly and Aft Bellcrank: Inspect condition. Inspect spherical bearing in underside of pitch control per Section 2.120; it is permissible to have a single radial crack in this spherical bearing ball. Verify no excessive looseness on output shaft (0.25 inch maximum rotational play measured at pitch link attaching bolt head). Verify operating clearance and assembly slides freely on output shaft. Verify no leakage at bearing seals. Verify security. _____

> **WARNING**
>
> **A031-1 Rev. J or prior pitch control assemblies require repetitive inspection per R22 Service Bulletin SB-90A every 300 hours or annually, whichever occurs first.**

Pitch Links: Inspect condition. Inspect rod ends and spherical bearings per Section 2.120. If pitch links are one-piece type, remove and reinstall with outboard end inboard and inboard end outboard as required to obtain maximum service life. Verify security and operating clearance. _____

Tail Rotor Blades: Inspect condition. Refer to Section 9.220 for damage limitations. Inspect bearings per Section 2.120. Verify no looseness between feathering bearing outer races and root fittings. Verify security. Verify blade tip drain holes (2 per A029-1 blade, 1 per A029-2 blade) are unobstructed. Verify no corrosion. Tap test bonded areas per Section 9.130 (h). _____

> **WARNING**
>
> **Structural damage may occur if compressed air is applied to blade tip drain holes.**

Tail Rotor Hub: Inspect condition. Inspect spherical teeter hinge bearings per Section 2.120; inspect elastomeric teeter hinge bearings per Section 2.125. Verify hub teeters without binding. Verify teeter hinge bearing balls (P/N A030-1 hubs only), spacers contacting output shaft, nuts, and bolt remain stationary when teetering hub. Verify no cracks or corrosion. Verify operating clearance. _____

Fasteners & Torque Stripes: Inspect condition and verify security of all fasteners. Renew deteriorated torque stripes per Figure 2-1. _____

2.410 Inspection Procedures and Checklist (cont'd)

11. Open Mast Fairing (11)

Mast Fairing: Inspect condition. Verify no cracks, dents, or corrosion. Verify no yeilding or cracking of A665-1 restraint. Yielding can be caused by overtightening screws in restraint nutplates. _____

Upper and Lower Ribs: Inspect condition. Verify security, especially tightness of lower rib clamp. _____

Three Vertical Push-Pull Tubes (Two A121-7 and One A121-5): Inspect condition. Inspect rod ends per Section 2.120. Verify no cracks at upper ends. With collective full up and cyclic full aft, verify no wear of A121-7 tubes or sleeves, especially where sleeves rub inside guide assembly. Verify security and operating clearance. _____

Pitot Tube and Line: Inspect condition. Verify no cracking, chafing, or kinking. Ensure drain hole on bottom of elbow behind pitot tube is clear. Verify security. _____

Fuel Tank Vent Metal Lines and Plastic Tubes: Inspect condition. Verify no kinking or obstructions. Verify security. _____

Swashplate Upper Scissors: Inspect condition. Inspect rod ends and spherical bearings per Section 2.120. Measure scissors play per Figure 2-8. Observe scissor linkage while having someone raise and lower collective. Verify bolt, journals (or spherical bearing balls and spacers), and arm rotate together at each scissor linkage pivot. Verify operating clearance. _____

Swashplate Lower Scissors: Inspect condition. Inspect rod ends per Section 2.120. Verify security. _____

Swashplate Slider Tube: Inspect condition. Verify no cracks at rivet holes or corrosion on base. Verify no damage to, or wear through, anodized tube surface. _____

Remove Swashplate Boot Lower Ty-rap: Lift boot from swashplate. Using an inspection mirror, inspect area between main rotor drive shaft and inside of slider tube. Verify no corrosion and no debris. Verify no boot damage. _____

Swashplate: Inspect condition. Verify 0.020 inch maximum radial play between swashplate ball and slider tube. Rotate rotor by hand and verify operating clearance and no rough or dry bearings. _____

Swashplate Shimming: Observe swashplate ball from below and have someone move collective stick slowly up & down. Verify swashplate ball immediately moves with swashplate when swashplate reverses direction. Movement of swashplate without attendant ball movement indicates axial play between ball and swashplate; shim swashplate per Section 8.416. _____

Install Swashplate Boot Lower Ty-rap: Verify correct boot position and security and no boot damage. _____

Fasteners & Torque Stripes: Inspect condition and verify security of all fasteners. Renew deteriorated torque stripes per Figure 2-1. _____

2.410 Inspection Procedures and Checklist (continued)

11. Open Mast Faring (11) (continued)

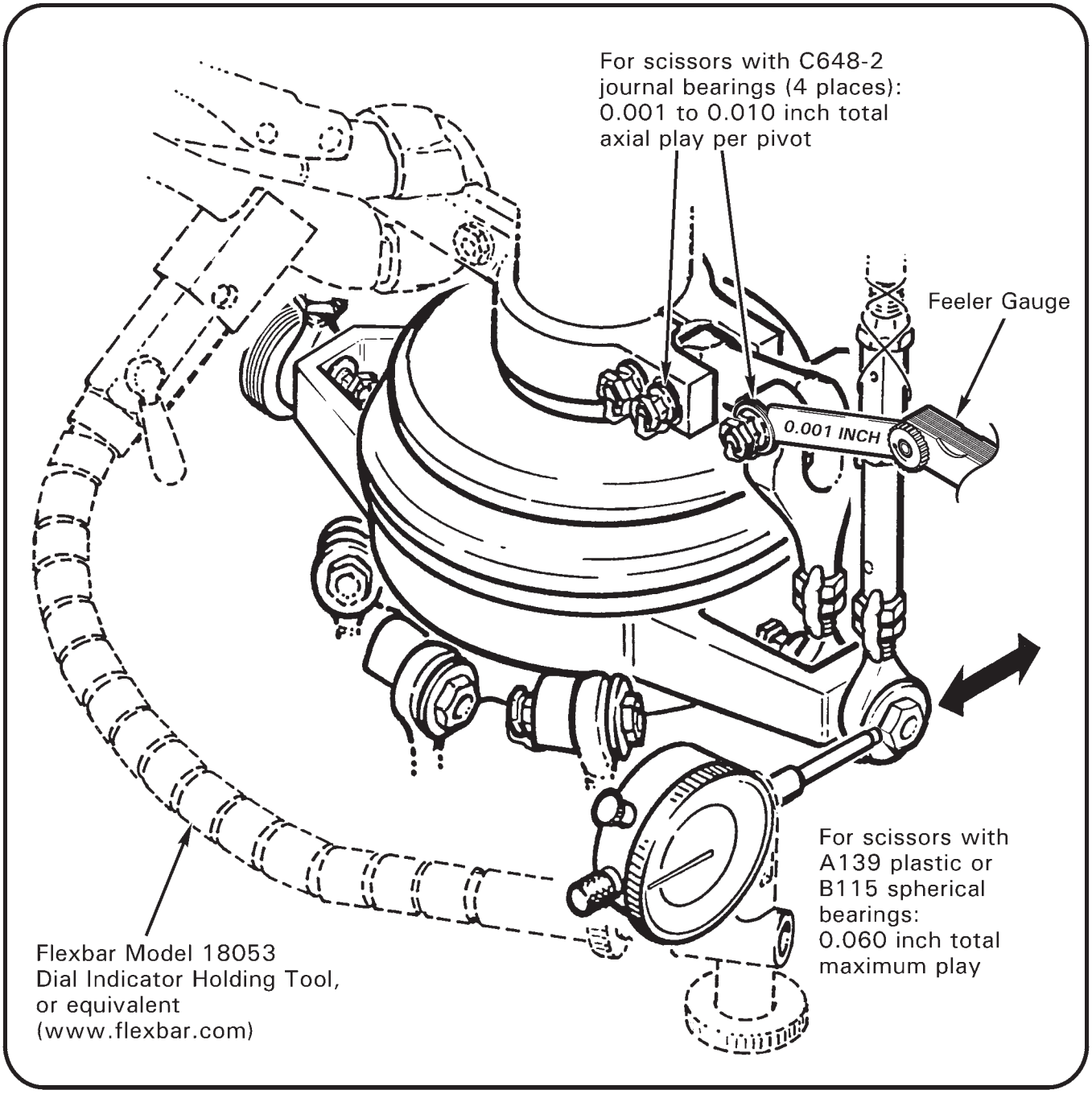

FIGURE 2-8 MEASURING UPPER SWASHPLATE SCISSORS PLAY
(Identify scissors bearing type and measure as shown)

2.410 Inspection Procedures and Checklist (continued)

12. Rotor Hub and Hinge Bolts

Hub: Inspect condition. Verify no nicks, scratches, gouges, or corrosion. If main rotor imbalance is suspected, check teeter and coning hinge friction per § 9.124. Verify no brown or black residue (indicates bearing wear). _____

Hinge Bolts: Inspect condition. Verify cotter pins are in place and secure. Verify bolt heads and nuts are torque striped to thrust washers. _____

Pitch Links and Rod Ends: Inspect condition. Inspect rod ends per § 2.120, including centering. Verify security, including jam nut tightness and proper safety wiring. _____

Fasteners & Torque Stripes: Inspect condition and verify security of all fasteners. Renew deteriorated torque stripes per Figure 2-1. _____

13. Main Rotor Blades

Boots: Inspect condition. Verify no boot damage or oil leakage. Verify proper boot position and security. Verify sufficient clearance from hub assembly through full control travel. _____

Blade Spindles & Root Fittings: Inspect area for damage per § 9.133. Comply with FAA Airworthiness Directive 88-26-01 (current revision) as required (A158-1 spindles only). Verify proper installation and security of visible fasteners. Renew deteriorated torque stripes per Figure 2-1. _____

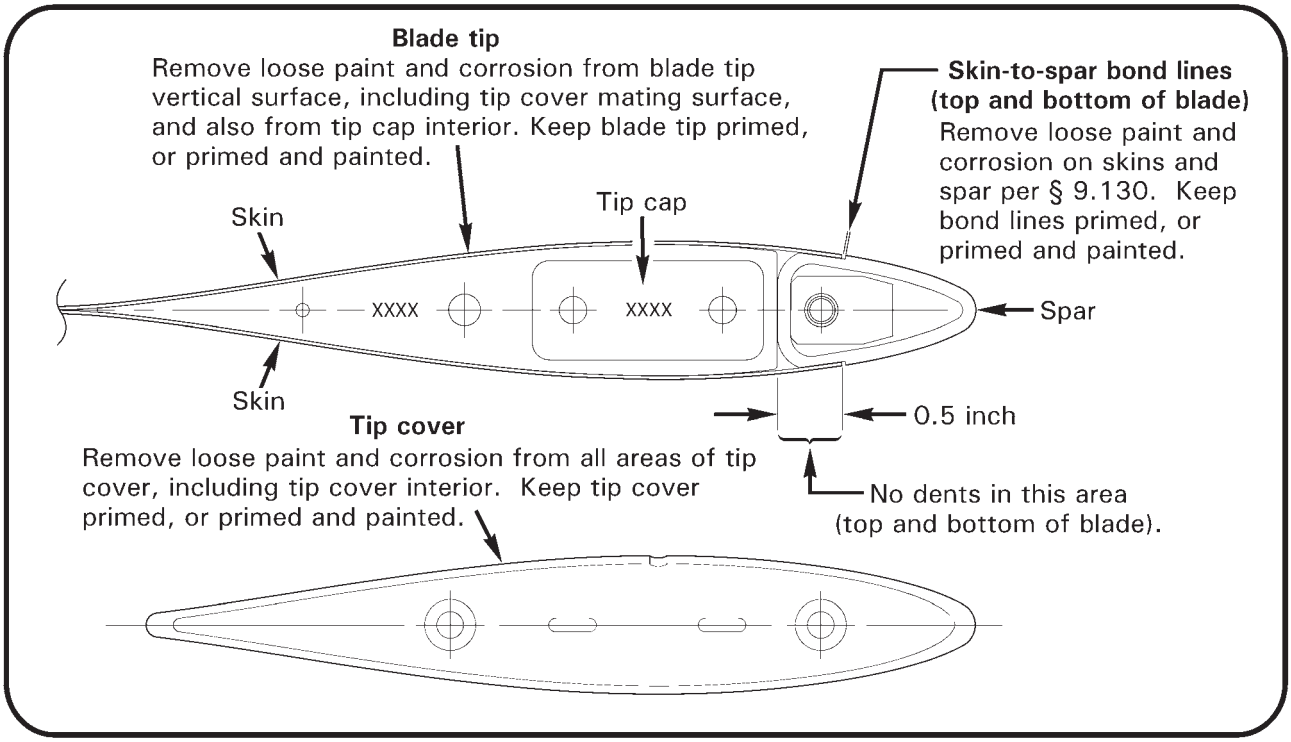

FIGURE 2-9 MAIN ROTOR BLADE TIP AND TIP COVER

2.410 Inspection Procedures and Checklist (continued)

13. Main Rotor Blades (continued)

A016-6 Main Rotor Blade Inspection: Remove tip covers. Remove corrosion and loose paint from tip covers, blade tips, and skin-to-spar bond lines. Epoxy prime, or prime and paint, any exposed bare metal on tip covers, blade tips, and skin-to-spar bond lines. Using an AN970-4 washer or 1965-or-later U.S. quarter-dollar coin, tap-test critical bond areas and verify no dull or hollow sounds. Visually inspect critical bond areas and verify no separation. Install tip covers, ensuring cover edges are flush with blade profile. _____

A016-4 Main Rotor Blade Bond Inspection: Perform R22 SB-103A or subsequent. _____

Main Rotor Blade Inspection: Inspect skins and doublers for scratches and corrosion per § 9.131. Inspect blades for dents and local deformations per § 9.132 and for voids per § 9.134. As required, wax blades with soft cleaning cloths using carnauba-type wax (such as SC Johnson® Paste Wax). Ensure tip cover and blade tip drain holes are unobstructed. _____

WARNING

Structural damage may occur if compressed air is applied to blade tip drain holes.

14. Cabin

General: Verify no loose equipment that might interfere with controls. _____

Seat Belts: Inspect condition. Verify no fraying or broken stitching. Check inertia reels for proper operation. Check buckles for proper operation. Verify security. _____

Windows: Minor defects or imperfections that do not impair pilot's visibility are considered acceptable. Acceptable defects include:

One nick, no more than 0.010 inch deep and no larger than 0.25 by 0.50 inch per square foot. _____

Scratches no more than 0.010 inch deep and 5 inches long. _____

Any surface defect such as small spots or stains that can be removed with light polishing. _____

For cracks and crazing adjacent to windshield edges refer to § 2.590. _____

Yaw String: Inspect condition. Minimum 3 inches long each side. Verify security. _____

Exterior: Inspect condition. Verify no cracks, corrosion, or damage. Verify no loose rivets. Loose rivets may be indicated by cracked paint and/or black residue around heads. _____

Left and Right Navigation Lights: Inspect condition. Verify red left, green right, lens cleanliness, and security. _____

2.410 Inspection Procedures and Checklist (continued)

14. Cabin (continued)

Doors: Inspect condition. Verify no structural cracks around hinges or door latches. Check door vents for operation. Ensure door hinge pins are secured with cotter pins. Check tightness of hinge mounting screws. Verify proper operation of door latching and locking mechanisms. _____

Fasteners & Torque Stripes: Inspect condition and verify security of all fasteners. Renew deteriorated torque stripes per Figure 2-1. _____

15. Landing Gear

Skid Tubes and Shoes: Inspect condition. Verify no more than 0.5 inch wide flat area on underside of skid tube due to wear. Verify longitudinal scratches are not more than 0.030 inch deep, and circumferential scratches are not more than 0.030 inch deep & are less than 0.50 inch long. Verify drain holes are open (not applicable to float landing gear). Verify security of rain caps. Verify minimum 0.05 inch shoe thickness. _____

Struts and Elbows: Inspect condition. Verify no cracks or corrosion, especially where joined and in weld areas at bottom of struts. Verify security. If helicopter routinely performs running landings, torque check strut-to-skid-tube bolts. _____

Cross Tubes: Inspect condition. Verify minimum tail skid height per § 5.210. Verify no corrosion. Verify security of rain caps. If a rain cap is loose, verify no internal corrosion. Verify no fretting at elbows. _____

Landing Gear Attach Points: Inspect condition. Verify no loose fasteners, cracks, buckling, or fretting. Inspect mounts and verify no loose swages or worn bearings. _____

Floats (if installed): Perform relief valve and bulkhead tests per § 2.580 (2) and (3). Verify proper inflation pressure per R22 POH. Inspect condition. Verify security. _____

Float Skid Tubes (if installed): Remove drain plugs at aft end of skid extensions. With ground handling wheels installed, pull down on tailcone to drain any trapped moisture. Install drain plugs. _____

Fasteners & Torque Stripes: Inspect condition and verify security of all fasteners. Renew deteriorated torque stripes per Figure 2-1. _____

16. Life-limited Parts, Component Overhaul and Retirement, ADs, & SBs

Life-Limited Parts: Replace life-limited parts that have reached maximum service life per § 3.300. Verify components installed correspond with helicopter maintenance record and have sufficient time remaining for projected operations. _____

Component Overhaul: Replace components that have reached maximum service before overhaul per § 3.100. Verify components installed correspond with helicopter maintenance record and have sufficient time remaining for projected operations. _____

2.410 Inspection Procedures and Checklist (continued)

16. Life-limited Parts, Component Overhaul and Retirement, ADs, & SBs

Component Retirement: Replace components that have reached maximum service life per § 3.100. Verify components installed correspond with helicopter maintenance record and have sufficient time remaining for projected operations. _____

Airworthiness Directives: Verify applicable airframe, engine, and accessory Airworthiness Directives (ADs) have been performed according to AD compliance procedures. Some aircraft may be affected by ADs that require recurring inspections at less than 100-hour or annual intervals. Recent U.S. Airworthiness Directives are available online at www.faa.gov. _____

Service Bulletins: Verify applicable airframe, engine, and accessory Service Bulletins (SBs) have been complied with according to manufacturers' instructions. Some aircraft may be affected by SBs that require recurring inspections at less than 100-hour or annual intervals. RHC Service Bulletins are available online at www.robinsonheli.com, under the Publications tab. _____

17. Required Documents and Placards

Documents: Check that required documents (Airworthiness Certificate, Registration, applicable Radio Station License, Pilot's Operating Handbook, Equipment List/Weight & Balance Data) are on board, legible, and current. _____

Placards: Verify required placards are properly installed, legible, and current. Refer to Pilot's Operating Handbook Section 2 for placard requirements. _____

18. Inspection and Access Covers

Foreign Objects Removed: Verify all tools, loose hardware, rags, and other foreign objects are removed from helicopter. _____

Covers Closed and Secure: Install/close all inspection and access covers removed in preceding steps. Verify security of all access covers. _____

Mariner Airbox Sealed: Ensure air box cover perimeter is sealed with aluminum tape (Mariner models only). _____

19. Maintenance Records

Maintenance Records: Verify maintenance records are accurate, legible, and complete. Enter maintenance performed (such as part replacement, equipment adjustments, servicing, and lubrication) and inspection data. Data must include a description of (or reference to data acceptable to the Administrator) the work performed, date, helicopter total time in service, signature, certificate type and certificate number of person approving aircraft for return to service. _____

Inspection Procedures and Checklist completed:

Mechanic's signature: _____ Date: _____

Intentionally Blank

2.500 SPECIAL INSPECTIONS

2.501 Clutch Actuator Upper and Lower Bearings Inspection and Lubrication

The actuator upper bearing is located on the clutch shaft, and the actuator lower bearing is located on the fanshaft. Failure of either actuator bearing in flight could cause loss of power to rotor system and result in a serious accident. Refer to Section 2.110 for general indications of bearing failure. In addition, just before failure of an actuator bearing, clutch light may flicker (on and off in less than one second) constantly or illuminate for a longer time than usual. Do not be confused with normal retensioning in flight (light on for up to 8 seconds, then off). Flight should not be resumed until cause of abnormal clutch light illumination has been determined.

Perform the following bearing inspections whenever an actuator bearing discrepancy is suspected or fanwheel is removed:

2.502 A181-4 Actuator Lower Bearing Inspection and Lubrication

WARNING

A181-1 & A181-3 bearings are obsolete and must be removed from service.

1. Remove fanwheel per Section 6.210.
2. Disconnect lower end of belt tension actuator from bearing housing.
3. Rotate bearing housing. Verify no roughness, scraping, or excessive looseness (0.010 inch maximum axial play). Verify no seal damage, and no heat damage. Lubricate bearing:
   a. Remove four perimeter screws, nuts, and washers.
   b. Remove bearing block with attached outer race (bearing outer race is split type). Forward seal retainer, forward seal, bearing inner race and bearing rollers will remain on fan shaft.
   c. Clean parts, including seals, and inspect for obvious damage.
   d. Lubricate bearing by filling openings on both sides of roller cage with A257-12 grease, but do not fill spaces between rollers.
   e. Reassemble. Ensure forward seal fits properly into recess provided in forward seal retainer (not applicable to Rev L bearings).
   f. Torque screws per Section 1.320.
   g. Rotate bearing housing. Verify no roughness and no excessive looseness.
4. Inspect bearing inner race on fanshaft. No movement or fretting is allowed between inner race and fanshaft.
5. If any indication of bearing failure is found, replace A007-3 or -5 shaft and bearing assembly per Section 7.290.
6. Install fanwheel per Section 6.220.
7. If bearing was lubricated, inspect & clean off any escaped grease after balancing fanwheel.

2.501 Clutch Actuator Upper and Lower Bearings Inspection and Lubrication (cont'd)

2.503 A184 Actuator Upper Bearing Inspection and Lubrication

1. Disconnect clutch lateral centering strut from bearing housing.

2. Disconnect bearing housing from actuator motor housing. Adjust actuator down limit stop screw fully upward, disengage clutch, and run actuator to fully disengaged position.

3. Rotate bearing housing and verify no roughness, scraping, or excessive looseness (0.060 inch maximum axial play). Verify no seal damage, loss of lubricant, or heat damage.

WARNING

Bearing used in A184 bearing assembly has modified internal clearance for use on R22. Do not substitute any other bearing.

4. Carefully inspect inner race of bearing on clutch shaft. Bearing inner race is torque striped to clutch shaft at two points 180 degrees apart; verify no rotation. Verify no fretting (fine reddish-brown residue) between bearing and shaft. Bearing outer race is torque striped to bearing housing; verify no rotation. Replace bearing assembly if any movement of inner race relative to shaft, or outer race relative to bearing housing, is evident.

5. Connect clutch lateral centering strut and actuator motor housing to bearing housing. Torque attach bolts per Section 1.320 and torque stripe per Section 1.310.

6. Adjust actuator down-limit stop screw to achieve V-belt deflection noted in Figure 7-7A when fully disengaged.

7. Lubricate bearing per Section 1.140.

2.507 V-Belt Inspection

The most common V-belt discrepancies and courses of corrective action are given below.

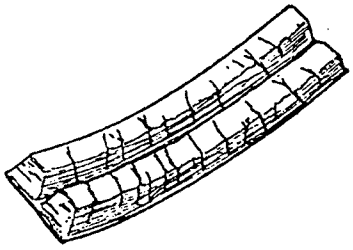

1. Belts Cracking:

CAUSE	REMEDY
Belt is old.	Replace belts per Section 7.280.
Belt slipping causing heat buildup and gradual hardening of undercord.	Replace belts per Section 7.280. Replace actuator per Section 7.500.

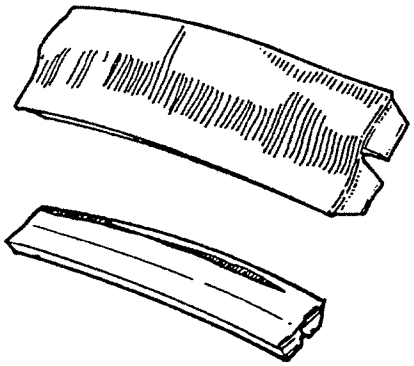

2. Top of Tie Band Frayed or Damaged:

CAUSE	REMEDY
Obstruction interfering with normal belt operation.	Remove obstruction, and replace belts per Section 7.280.

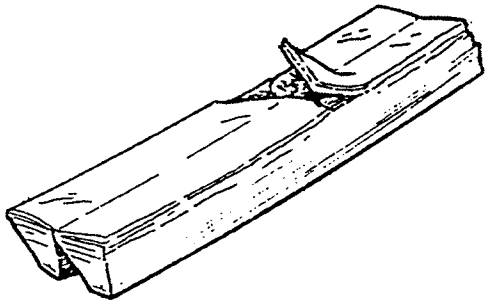

3. Top of Tie Band Blistered or Perforated:

CAUSE	REMEDY
Dirt or sand accumulating between belts and sheave.	Replace belts per Section 7.280. Periodically wash inside of replacement belts.
Belts worn out	Replace belts per Section 7.280.

FIGURE 2-10 V-BELT DISCREPANCIES

2.507 V-Belt Inspection (cont'd)

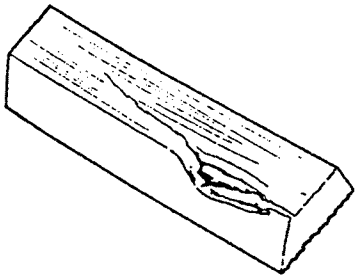

4. Belt Cut on Inside:

CAUSE	REMEDY
Belt forced over sheave flange during installation without proper slack.	Replace belts per Section 7.280.
Foreign material fell into belt drive.	Remove foreign material and replace belts per Section 7.280.

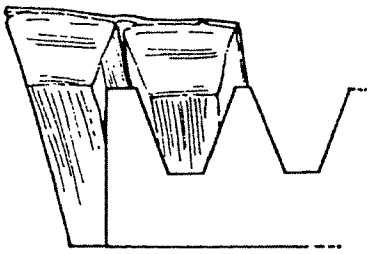

5. Belt Riding Outside Sheave Groove:

CAUSE	REMEDY
Belt forced over sheave flange during installation without proper slack.	Replace belts per Section 7.280.

FIGURE 2-10A V-BELT DISCREPANCIES

2.508 Lower Sheave V-Belt Wear Pattern Inspection

Observe wear patterns in paint primer in all four lower sheave grooves. The eight wear patterns (both sides of all four grooves) should appear very similar and be consistent around sheave circumference.

If wear pattern is noticeably different from groove to groove, measure width of narrowest and widest wear patterns. See Figure 2-11. If ratio exceeds 3:1, replace V-belts per Section 7.280.

CAUTION

RHC does not recommend using A170-1 or -2 Revision N or prior upper sheaves with A493-1 Revision T or later lower sheaves. Such combinations may cause excessive drive belt vibration. Refer to Figure 7-3D.

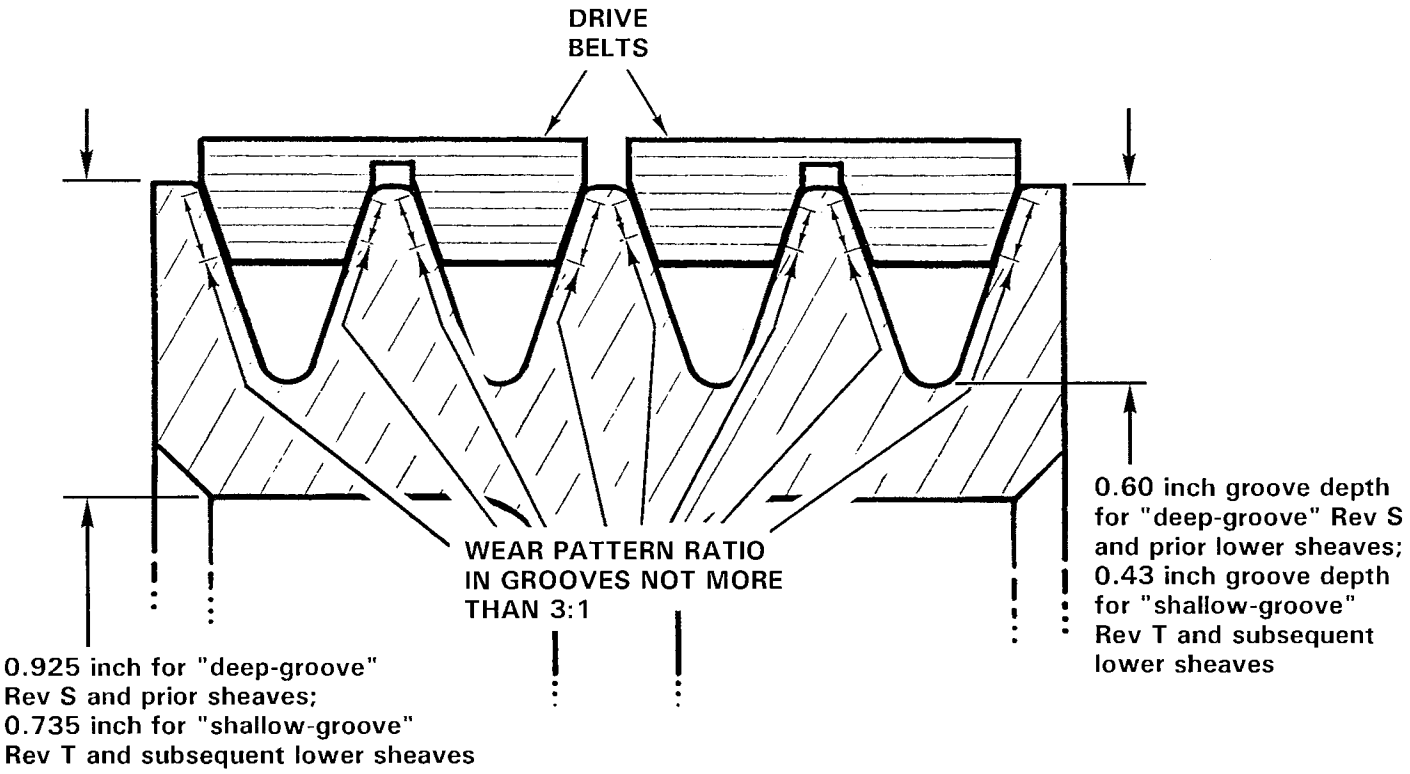

FIGURE 2-11 LOWER SHEAVE V-BELT WEAR PATTERN

2.510 Tail Skid Strike

A. Scuffing or Slight Bending of Tail Skid

1. Visually inspect tail rotor blades. Verify no evidence of solid object or ground contact. If tail rotor damage is found, inspect tail rotor per Section 2.520.

2. Visually inspect lower vertical stabilizer. Verify no buckling, cracks, or loose rivets at tail skid and lower vertical to horizontal stabilizer attach points.

3. Visually inspect horizontal stabilizer to tailcone attach points. Verify no buckling, loose rivets, or cracking.

4. Visually inspect tailcone. Verify no damage. Also inspect tailcone-to-upper steel tube frame attach points and verify no buckling or loose attach bolts.

B. Buckling or Breaking of Tail Skid and/or Lower Vertical Stabilizer

1. Perform inspections per Section 2.510.A.

2. Inspect tail rotor drive shaft run-out per Section 7.340.

3. Remove tailcone and:

   a. Visually inspect tailcone attach points. Verify any elongated holes are no greater than 0.265 inch across at widest point.

   b. See Figure 2-12. Using a Section 1.410 approved paint stripper, remove paint from and within 2 inches of tailcone attach points on upper frame.

   c. Dye penetrant inspect upper steel tube frame at tailcone attach points.

4. Remove stabilizer assembly and:

   a. Visually inspect horizontal stabilizer. Verify any elongated holes at attach points are no greater than 0.265 inch across at widest point. Verify no loose rivets or buckling.

   b. Using a Section 1.410 approved paint stripper, remove paint from tailcone casting exterior surfaces.

   c. Dye penetrant inspect casting.

5. Remove lower vertical stabilizer from horizontal stabilizer and visually inspect. Verify no buckling, cracks, or loose rivets. Buckling or cracks require replacement of stabilizer. Loose rivets may be drilled out and replaced. Verify any elongated holes at attach points on either stabilizer are no greater than 0.200 inch across at widest point.

2.520 Tail Rotor Strike

A. Contact with Small Stone, Tall Grass, or Other Small Object in Free Air

1. Inspect tail rotor per Section 9.220.
2. Check tail rotor drive shaft run-out per Section 7.340. If run-out exceeds 0.025 inch at any location, shaft must be replaced or repaired.

B. Sudden Stoppage of Tail Rotor due to Ground or Solid Object Contact (Causing Bending or Shearing of Blade(s))

1. Perform inspections per Section 2.520.A.
2. Using Section 1.410-approved paint stripper, strip paint surrounding and at least 2 inches from tail rotor drive shaft forward holes and aft weld. Dye penetrant inspect stripped areas. If cracks are found, drive shaft must be replaced.
3. Visually inspect drive shaft. Verify no deformation, nicks, dents, or scratches. Nicks and scratches may be polished out per Section 7.360. Deformation or dents require replacement of drive shaft.
4. Remove tail rotor and tail rotor gearbox and return to RHC for overhaul.
5. Replace aft and intermediate flex plates.
6. Visually verify tail rotor blades have not struck tailcone and empennage.
7. Visually inspect main rotor system. Verify no nicks, dents, or scratches.

2.530 Main Rotor Strike

A. Contact with Small Objects in Free Air

1. Inspect main rotor blades per Section 9.130.
2. Verify no buckling or bending of trailing edge.

> **WARNING**
>
> **Any main rotor blade buckling or spar bending is considered sudden stoppage and requires compliance with Part B.**

B. Sudden stoppage of Main Rotor Due to Ground or Solid Object Contact

1. Check tail rotor drive shaft run-out per Section 7.340.
2. Remove following components and return to a RHC authorized overhaul facility for inspection and/or repair.
   a. A005-2 Main Rotor Blade and Spindle Assemblies
   b. A005-4 Main Rotor Hub and Bearings
   c. A017-2 Swashplate Assembly
   d. A018-1 or -2 Clutch Assembly
   e. A106 Main Rotor Journals
   f. A152-1 Thrust Washers
   g. A907-4 or -5 Yoke
   h. A908-4 or A006-5 Yoke
3. Replace A947-1 forward flex plate.
4. Return main rotor gearbox to RHC for overhaul.
5. Inspect engine per engine manufacturer's sudden stoppage instructions.

2.540 Rotor/Engine Overspeed

A. Rotor Overspeed Between 110 and 116%

> NOTE
>
> Refer to Part C if a power-on overspeed occurs.

1. Check main rotor and tail rotor dynamic balance. Compare pre-overspeed and post-overspeed balance.

> **CAUTION**
>
> Any change in rotor dynamic balance greater than 0.3 ips requires inspection per Part B.

2. Remove main rotor blades. Drain pitch bearing housings. Remove outer blade boot clamps and fold boots away from pitch horns. Rotate spindles to verify no brinelling of pitch bearings.

> NOTE
>
> Bearings have a high preload; slight roughness is normal. If roughness is evident, return blade and spindle assembly to RHC-authorized overhaul facility for repair.

3. Visually inspect main and tail rotor blades.
4. Check tail rotor drive shaft run-out per Section 7.340.

2.540 Rotor/Engine Overspeed

B. Rotor Overspeed at or Above 116%

> NOTE
>
> For power-on overspeeds, Part C must also be performed.

1. Perform inspection per Part A steps 2, 3, and 4.
2. Return blades and hub to an RHC-authorized overhaul facility for NDT inspection of spindles and hub.
3. Replace any cracked or bent bolts, thrust washers, and journals. Magnetic particle inspect any parts not replaced.

C. Engine overspeed

Percent engine overspeed is determined from tachometer indication as follows:

$$\% \text{ Engine Overspeed} = \frac{\text{Engine Tach Indication (\%)} \times 2550}{2700} - 100$$

> NOTE
>
> 104% Engine Tach Indication = 2652 Actual Engine RPM. Engine is rated at 2700 RPM.

Refer to Lycoming SB 369 (current revision) for engine overspeed inspection requirements.

2.550 Hard Landing

A. Yielding of Cross Tubes Due to Hard Landings Without Side Loads

> NOTE
>
> Side loads are indicated by buckling and bending of steel tube frame or sheet metal.

1. Visually inspect steel tube frames. Verify no yielding or cracks. Pay particular attention to lower steel tube frame aft vertical struts.

2. Check tail rotor drive shaft run-out per Section 7.340.

3. Visually inspect main rotor blades per Section 9.130.

4. Place rotorcraft on level ground and measure from tail skid or bottom of float stabilizer to ground. Aft cross tube must be replaced if dimension is less than:

   24 inches for Standard or HP.
   34 inches for Alpha, Beta, Beta II, Mariner, or Mariner II measured from tail skid.
   37 inches for Mariner or Mariner II, measured from float stabilizer.

   Replace forward cross tube if it contacts cross tube cover.

5. Check and adjust upper and lower sheave alignment per Section 7.230.

B. Hard Landings That May Impose Side Loads on Landing Gear

> NOTE
>
> Side loads are indicated by buckling and bending of steel tube frame or sheet metal.

1. Perform inspection per Part A.

2. Visually inspect fuselage landing gear attach points, vertical firewall, and horizontal firewall. Verify no buckling or cracks. Pay attention to engine mount strut-to-vertical firewall attach points.

3. Remove tailcone per Section 4.311.

4. See Figure 2-12. Using a Section 1.410 approved paint stripper, remove paint from and within 2 inches of tailcone attach points on upper frame. Dye penetrant inspect upper steel tube frame at tailcone attach points. I

5. Visually inspect tailcone. Verify no buckling or loose rivets.

6. Visually inspect landing gear elbows. Verify no yielding, nicks, or cracks.

2.550 Hard Landing

B. Hard Landings That May Impose Side Loads on Landing Gear (cont'd)

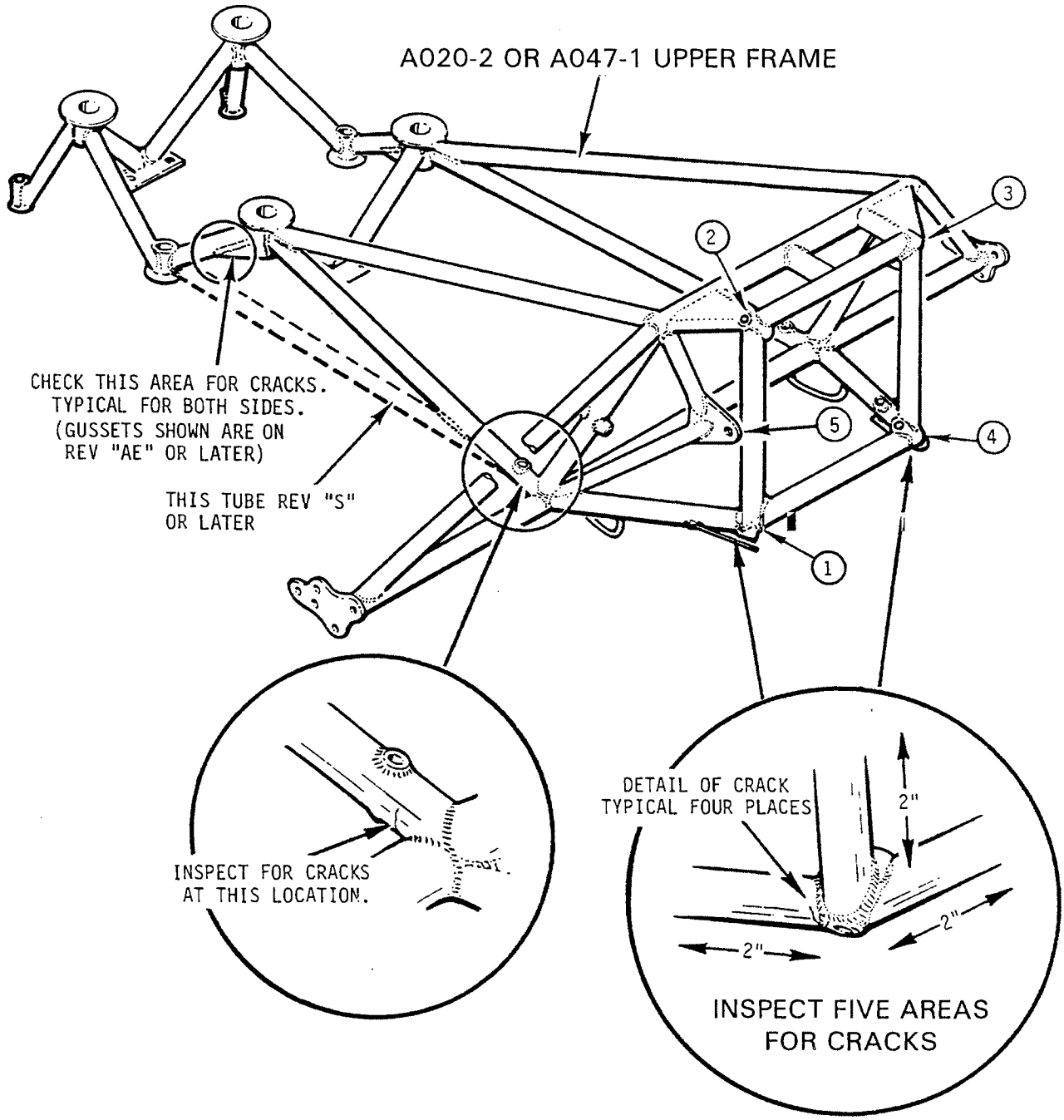

FIGURE 2-12 UPPER FRAME CRACK INSPECTION

2.560 Steel Tube Frame Corrosion

1. For large areas of corrosion, remove frame and strip paint using a Section 1.410 approved paint stripper to determine full extent of corrosion. If corrosion exceeds Figure 2-13 limits, replace frame.

2. Measure and record diameter of frame member at corroded area(s).

3. Polish out corrosion with 320-grit or finer wet-or-dry sandpaper. Measure frame member diameter at polished area(s). Compare with measurement(s) from step 2, and verify polish depth is within Figure 2-13 limits.

4. Clean, prime, and paint frame (see Section 1.400). Install frame if removed in Step 1.

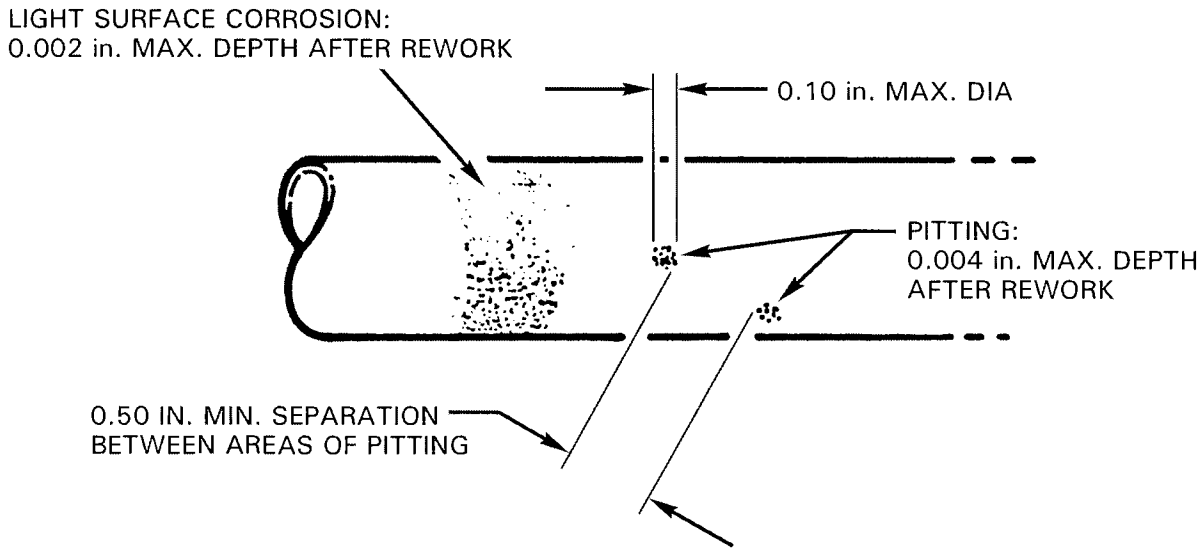

FIGURE 2-13 FRAME CORROSION AND REPAIR LIMITS

2.570 Main Rotor Blade Detail Inspection

2.571 Spar Cover Adhesive Damage **(A016-2 main rotor blade only)**

Perform this inspection if cracks or chips are noted in adhesive around spar cover.

1. See Figure 2-14. Remove spar cover. Use single-edge razor blade or knife to lift outboard tip of spar cover from leading edge, then peel cover off with pliers.

CAUTION
Do not nick or cut main rotor blade.

2. Carefully remove remaining adhesive from leading edge spar cover contact surfaces by hand block sanding in a spanwise direction with 320-grit or finer wet-or-dry sandpaper.

3. Remove sanding debris by vacuuming.

4. Using a 10X magnifying glass and strong inspection light, inspect doubler and skin. Verify no corrosion or separation between layers. Additionally verify no blisters or bulges in skin or doubler. (Blisters or bulges may indicate separation not visible at leading edge.)

5. Tap test area around the spar cover per Section 9.130 h).

6. Return blade to RHC for inspection and possible repair if any of the following discrepancies are found:

   a. Voids found by tap testing.

   b. Blisters or bulges in the skin or doubler.

   c. Separation with a total length greater than 2.5 inches per side. See Figure 2-14.

   d. Any separation between the skin and spar in Area A. See Figure 2-14.

7. If no discrepancies are found, clean spar cover area with Section 1.420-approved solvent and prime lightly with epoxy primer. Let primer dry for at least ½ hour.

8. Bond cover in place with B270-9 adhesive. Follow manufacturer's instructions for mixing adhesive. Temporarily secure covers in place with masking tape, and allow adhesive to cure.

9. Clean off excess adhesive. Prime and paint spar cover.

2.571 Spar Cover Adhesive Damage (A016-2 main rotor blade only) (cont'd)

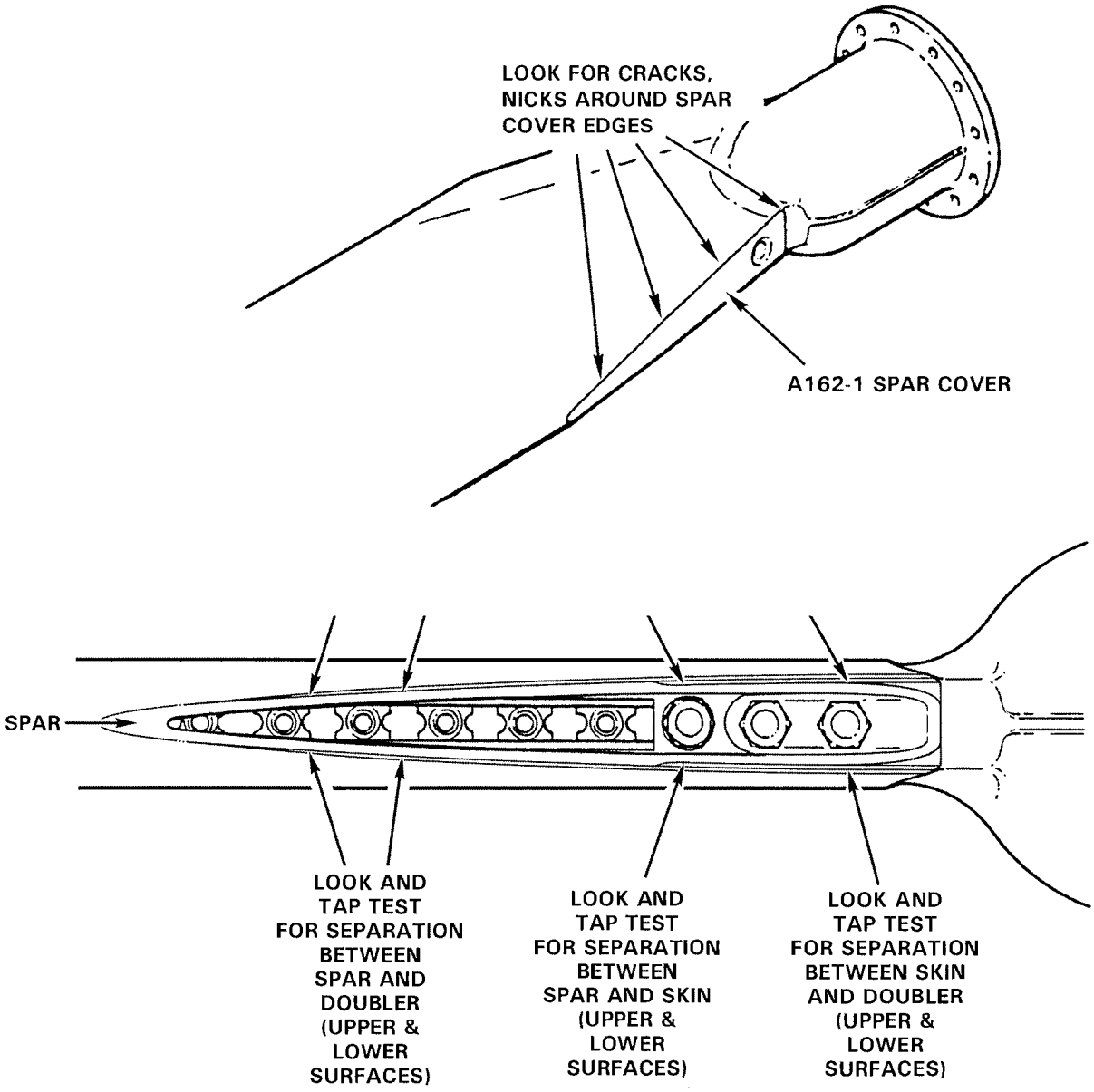

FIGURE 2-14 MAIN ROTOR BLADE SPAR COVER AREA DETAIL INSPECTION

(Leading edge view looking aft with spar cover removed)

2.572 Main Rotor Blade Sealant and Filler Cracking

The painted two-part epoxy filler used as an aerodynamic-smoothing and water-blocking compound in main rotor blade root fitting and trim tab areas occasionally cracks. To verify cracks are superficial, perform the following procedure:

1. Remove crack indications by hand sanding with 320-grit or finer wet-or-dry abrasive paper until cracked paint and filler is removed. Occasionally wiping with water helps highlight cracks. It is unnecessary to sand through to bare metal in most cases.

WARNING

Do not use chemical paint strippers or power tools.

2. Sand spanwise with 400-grit or finer wet-or-dry abrasive paper to remove all chordwise scratches.
3. Tap test suspect area to verify absence of voids.
4. Dye-penetrant inspect suspect area following penetrant manufacturer's instructions.
5. If no voids and no cracks in metal are found, prime and paint area with approved materials. Refer to Section 9.130.
6. Replace any blade exhibiting voids or metal cracks prior to further flight and contact RHC Technical Support for further instructions.

2.573 Visual Inspection of Main Rotor Blade Root Area

A main rotor blade fatigue failure could occur if the helicopter is repeatedly flown above its approved gross weight limit or operated above its approved manifold pressure limits. The first indication of a fatigue crack in progress may be a rotor that will not stay balanced after being adjusted. Another indication may be a very fine hairline crack appearing in the areas shown in the figure below.

1. Visually examine both the upper and lower surface of each blade in the areas shown with a 10x magnifying glass.

2. If any indication of a crack is found, immediately ground the aircraft and return the suspect blade to the RHC factory for examination.

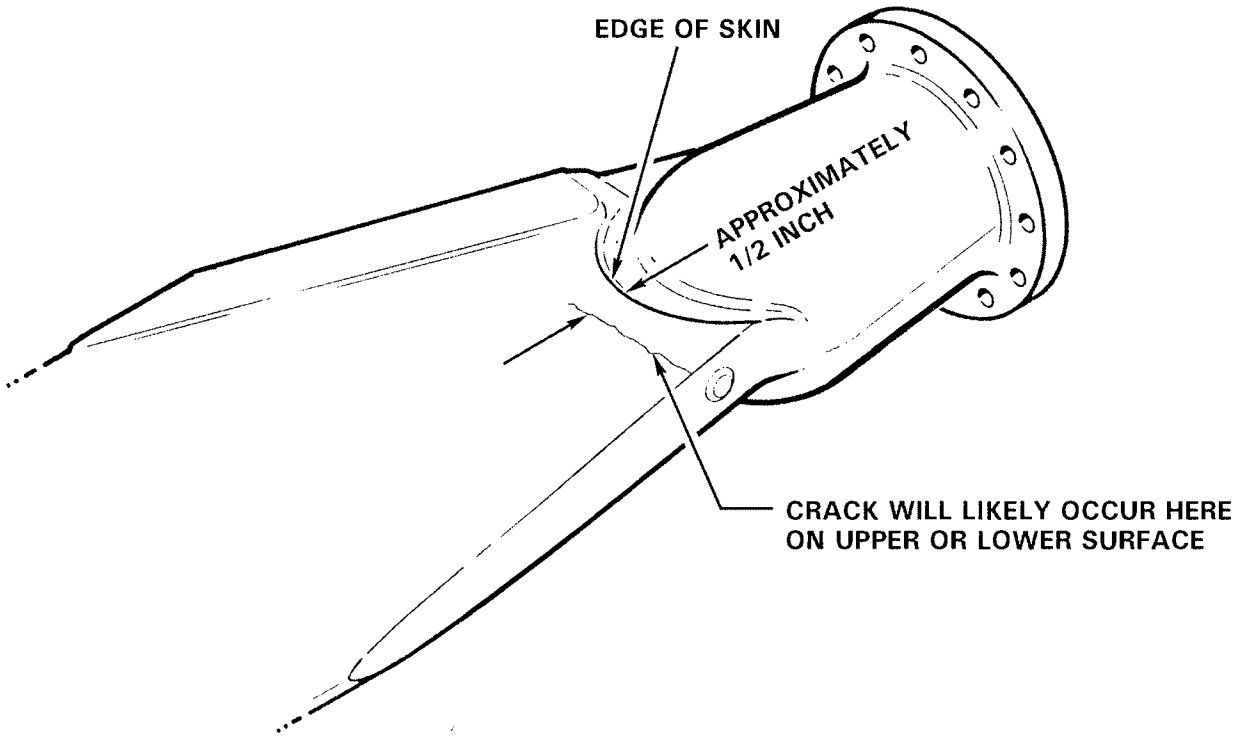

FIGURE 2-15 MAIN ROTOR BLADE ROOT INSPECTION

2.580 Float Inspection and Testing

1. Inspection Intervals and Float Replacement

Perform Relief Valve Test and Bulkhead Test during each 100-hour or annual inspection. Floats must be repaired or replaced on condition, or upon failure of Relief Valve or Bulkhead Test.

2. Relief Valve Test

CAUTION

When filling floats, open inflation valve prior to applying air pressure; do not apply air pressure against a closed valve.

CAUTION

Prior to test, inspect float bag uninflated and with each compartment individually inflated to 0.75 to 1.0 psig. Verify no cuts, tears, punctures, abrasion, delamination (blistering), or seam separation.

a. Use filtered oil-free dry air to inflate float compartments to 5.0 psig. Inflate by using a manifold or inflate chambers individually in 0.5 psig increments.

b. Fill relief valve apertures with clean water. Slowly increase pressure and observe relief valves; bubbles indicate opening. Record opening pressures, then reduce pressure until bubbles stop, indicating relief valves are closed. Record closing pressures.

CAUTION

Do not exceed 7 psig in float compartments.

c. Replace any valve not meeting the following criteria:

Opening pressure:	5.5 to 6.5 psig
Closing pressure:	5.5 psig minimum

3. Bulkhead Test

1. Deflate all float chambers, then inflate forward chamber and second chamber from rear to 3 psig.

2. Repair or replace floats if pressure in inflated chambers after 1 hour, at constant temperature, is less than 2.75 psig minimum.

3. Deflate all float chambers, then inflate aft chamber and second chamber from front to 3 psig. Repeat step 2.

2.590 Windshield Inspection

If cracks or crazing adjacent to windshield retainer strips exceed limits given in Figure 2-16, replace windshield per Section 4.120.

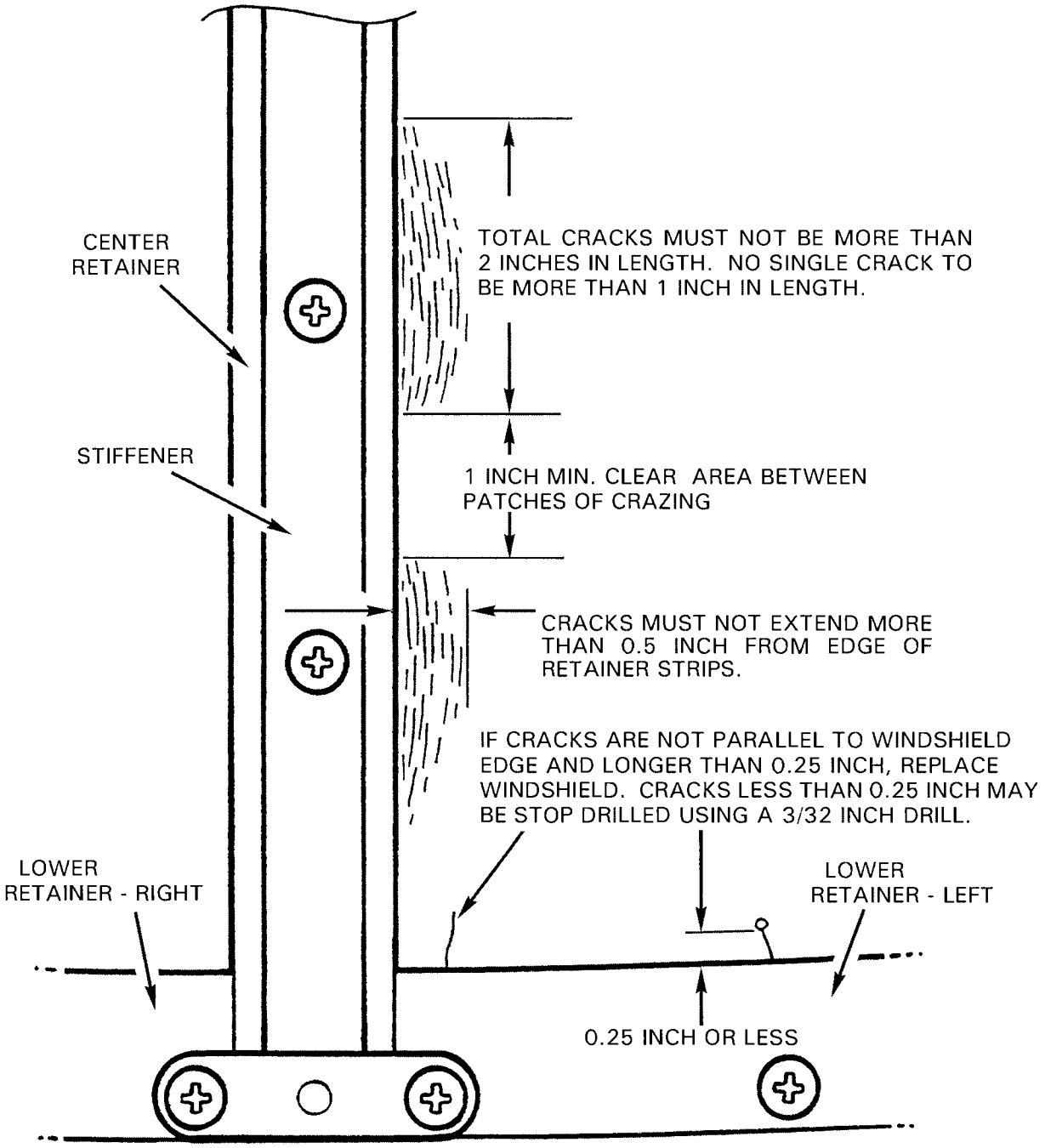

FIGURE 2-16 WINDSHIELD INSPECTION

2.600 12-YEAR INSPECTION AND LIMITED OVERHAUL REQUIREMENTS

If less than 2200 hours time-in-service, but 12 years or more have elapsed since helicopter was new or last overhauled, proceed as follows:

> NOTE
>
> This Section does not supersede 2200 hour inspection and overhaul requirements contained in Section 3. Section 3 must be complied with based on component service lives regardless of when a 12-year inspection was completed.

2.610 Inspection Procedure

1. Ground check and run up aircraft per Sections 2.205 and 2.210.

2. Remove following components and return to an RHC-authorized component overhaul facility for disassembly and inspection per Section 2.630.

A005-2 or -6	Main Rotor Blade and Spindle Assembly
A005-4	Main Rotor Hub Assembly
A006-1 or -6	Main Rotor Gearbox and Mast Assembly
A007-3 or -5	Fanshaft and Bearing Assembly
A008-2	Tail Rotor Assembly
A017-2	Swashplate Assembly
A018-1 or -2	Clutch Assembly
A021-1 or B021-1	Tail Rotor Gearbox Assembly
B174-1	Fanwheel Assembly

3. On all aircraft, replace the following parts with new or overhaul exchange parts:

A011-2	Throttle Arm Assembly
A031-1	Tail Rotor Pitch Control
A041-11	Tail Rotor Driveshaft Damper Bearing Assembly
A051-1	Actuator Assembly
A120-1	Tail Rotor Bellcrank
A190-1 or -2	V-Belts
A258-1	Main Rotor Pitch Link Assemblies
A480-1	Swashplate Boot
A785-x	Hoses, Air Ducts (various dash numbers)
A792-2 or -4	Dual Tachometer
B283-x	Hose Assemblies (various dash numbers)
B173-1	Alternator Belt (3VX375)
B286-2	Governor Controller

4. Remove engine cooling panels, fanwheel, scroll, air induction system, carburetor heat system, oil lines, and all hoses. Flush and pressure test oil cooler. Overhaul or inspect, as required, magnetos, alternator, and carburetor per appropriate manufacturer's maintenance publications and service bulletins.

5. Remove horizontal and vertical stabilizers. Visually inspect. Verify no cracks, corrosion, loose rivets, dents, or deformation. Dye penetrant inspect suspect areas. Replace or upgrade horizontal stabilizer as required per Section 2.620.

2.610 Inspection Procedure (cont'd)

6. Remove landing gear assembly and replace as required per Section 2.620. If replacement is not required, completely disassemble, remove paint, and visually inspect. Verify no cracks, corrosion, or deformation. Magnetic particle and fluorescent penetrant inspect. Clean, prime, and paint using Section 1.400 approved materials.

7. Remove steel tube frames, replacing those specified in Section 2.620. Remove paint from frames not replaced, and visually inspect. Verify no cracks or corrosion. Magnetic particle inspect. Clean, prime, and paint using approved materials per Section 1.400.

8. Remove steel cyclic stick. Remove paint using Section 1.410-approved stripper. Visually inspect. Verify no cracks or corrosion. Magnetic particle inspect. Clean, prime, and paint using Section 1.400-approved materials.

9. Remove A121 push-pull tubes. Remove paint, and visually inspect. Verify no cracks or corrosion. Fluorescent penetrant inspect. Clean, prime, and paint using Section 1.400-approved materials.

10. Inspect airframe wiring condition. Verify no corrosion, insulation deterioration, or other damage.

11. Magnetic particle inspect A650 fittings and A337-1 jackshaft.

12. Inspect and pressure test fuel tank(s) and fuel system per Section 12.120 and 12.260.

13 Comply with latest revision of Lycoming Service Instruction 1009.

14. Replace additional parts as required per Section 2.620.

15. Assemble aircraft. Rig flight controls and rotor systems per Section 10.100. Verify fanwheel and tail rotor balance.

16. Inspect aircraft per Section 2.400.

17. Repeat Step 1.

18. Track and balance main rotor per Section 10.200.

19. Flight check aircraft per Section 2.220.

20. Drain, flush, and fill gearboxes per Section 1.100.

21. Weigh helicopter and calculate CG per section 1.230. Enter new Basic Empty Weight and CG in helicopter's POH Section 6.

2.620 Additional Parts Requiring Replacement on Some R22s

In addition to the parts from Section 2.610, Step 3, the following parts require replacement with new or overhaul exchange parts as noted:

Part Number	Description	Notes
A014-8	Landing Gear Assembly	Replace A014-8 originally installed on R22 S/N 0002 thru 0487.
A020-2	Upper Frame Assembly	Replace frame S/N 0399 and prior (originally installed on R22 S/N 0002 thru 0311) with subsequent serial number. Note: Frame replacement may require tailcone forward bay replacement.
A044-1	Horizontal Stabilizer	Replace Rev M and prior (originally installed on R22 S/N 0002 thru 0631) with subsequent revision.
A169-1, -2, and -4	Muffler Assembly	Replace Rev J and prior (baffled muffler with straight tailpipe, originally installed on R22 S/N 0002 thru 0500) with subsequent revision.
A193-2	Flex Plate	Replace A193-2 (no bonded washers, originally installed on R22 S/N 0002 thru approx 0290) with A947-2.
A193-3	Flex Plate	Replace A193-3 (no bonded washers, originally installed on R22 S/N 0002 thru 0283) with A947-3.
A197-1 thru -7	Tail Rotor Drive Shaft Assembly	Originally installed on R22 S/N 0002 thru 0747. Replace with B224-1 driveshaft and appropriate B223 yoke. See R22 IPC.
A493-1	Lower Sheave	Replace Rev H and prior (anodized, originally installed on R22 S/N 0002 thru 0294) with subsequent (steel-sprayed) revision.
A649-1 &-2	Oil Cooler	Replace with C649-1.

2.630 Component Inspection Procedure

Part Number	Description	Procedure
A005-2 or -6	Main Rotor Blade & Spindle Assembly	Replace blades due to possibility of internal corrosion and adhesive deterioration. Replace pitch horn screws, boots, and o-rings. Pitch horn, spindles, and other hardware may be reused after inspection and verifying no damage.*
A005-4	Main Rotor Hub	Remove bearings. Visually inspect hub assembly. Verify no fretting, corrosion, or obvious damage. Fluorescent penetrant inspect hub. Magnetic particle inspect journals and thrust washers.
A006-1 or -6	Main Rotor Gearbox	Replace pinion seal and all o-rings (mast and Mast Assembly tube base, input shaft, end cover, sump, chip detector, chip detector housing, and sight gage). Replace sealed ball bearing atop mast tube. Replace rubber mounts.*
A007-3 or -5	Fanshaft and Bearing Assembly	Replace A181-x bearing with factory new or overhaul exchange A181-4 bearing. Inspect fanshaft.*
A008-2 or -4	Tail Rotor Assembly	Replace blades due to possibility of internal corrosion and adhesive deterioration. Remove teeter hinge bearings. Inspect hub and hub plates; verify no fretting or corrosion. Fluorescent penetrant inspect hub. Replace blade attach bolts. Replace teeter hinge bearings.*
A017-2	Swashplate Assembly	Clean, inspect, regrease, or replace (as required) swashplate duplex bearings. Ensure aluminum ball is installed.*
A018-1 or -2	Clutch Assembly	Disassemble, clean, and inspect. Replace all seals, o-rings, and lubricant. Replace A184-x bearing with factory new or overhaul exchange part.*
A021-1 or B021-1	Tail Rotor Gearbox	Replace all seals, o-rings, and gaskets. Verify no internal damage.*
B174-1	Fanwheel Assembly	Disassemble, clean, inspect. Verify no cracks or corrosion.

*An RHC-authorized component overhaul facility shall perform procedure.

2.700 2200-HOUR OVERHAUL REQUIREMENTS

When helicopter has accumulated 2200 hours time-in-service, proceed as follows:

> NOTE
>
> Kit R7351 contains the majority of parts required for a 2200-hour overhaul. Previously replaced airworthy components may remain in service until accumulating 2200 hours or 12 years time-in-service, whichever occurs first, since new or since last overhaul.

2.710 Inspection Procedure

1. Ground check and run up aircraft per Sections 2.205 and 2.210.

2. Remove following components and return to an RHC-authorized component overhaul facility for overhaul, or replace with new or factory overhaul-exchange parts.

A005-2 or -6	Main Rotor Blade and Spindle Assembly
A005-4	Main Rotor Hub Assembly
A007-3 or -5	Fanshaft and Bearing Assembly
A008-2 or -4	Tail Rotor Assembly
A017-2	Swashplate Assembly
A018-1 or -2	Clutch Assembly
B174-1	Fanwheel Assembly

3. On all aircraft, replace following parts with new or overhaul-exchange parts:

A006-1 or -6	Main Rotor Gearbox and Mast Assembly
A011-2 or D756-2	Throttle Arm Assembly
A021-1 or B021-1	Tail Rotor Gearbox Assembly
A031-1	Tail Rotor Pitch Control
A041-11 or -12	Tail Rotor Driveshaft Damper Bearing Assembly
A051-1	Actuator Assembly
A120-1	Tail Rotor Bellcrank
A121-17	Tail Rotor Push-Pull Tube Assembly
A628-X	Harness & Buckle Assemblies
A792-2 or -4	Dual Tachometer
B224-1	Tail Rotor Drive Shaft
B286-2	Governor Controller
C649-1	Oil Cooler

4. On all aircraft, replace following parts with new parts:

A027-4, A305-x A306-1 & -2, A308-1, A309-1 or -15, A310-1 & -2, A312-1, A313-1, & A449-1	Engine Cooling System Panels
A169-x	Muffler with Risers (various dash numbers)
A190-1 or -2	V-Belts
A241-2	Cross Tube, Aft
A258-1	Main Rotor Pitch Link Assemblies
A480-1	Swashplate Boot
A649-1 or -2	Oil Cooler (replace with C649-1)
A636-2 or C636-2	Support

2.710 Inspection Procedure (cont'd)

4. On all aircraft, replace following parts with new parts (cont'd):

A723-1,-2,-5,&-6	Oil Line Assemblies, Out & Return
A780-1,-2,-5,-6,&-7	Battery Cable Assemblies
A785-x	Hoses, Air Ducts (various dash numbers)
A947-1	Flex Plate Assembly
A947-2 or A193-2	Flex Plate Assembly
A947-3 or A193-3	Flex Plate Assembly
B283-x	Hose Assemblies (various dash numbers)
B173-1	Alternator Belt

5. Remove engine, engine cooling panels, fanwheel, scroll, air induction system, carburetor heat system, oil lines, and all hoses. Flush and pressure test oil cooler. Overhaul or inspect, as required, magnetos, alternator, and carburetor per appropriate manufacturers' maintenance publications and service bulletins. _____

6. Remove horizontal and vertical stabilizers. Visually inspect. Verify no cracks, corrosion, loose rivets, dents, or deformation. Dye penetrant inspect suspect areas. Replace or upgrade horizontal stabilizer as required per Section 2.720. _____

7. Remove landing gear assembly and replace as required per Section 2.720. If replacement is not required, completely disassemble, remove paint, and visually inspect. Verify no cracks, corrosion, or deformation. Magnetic particle and fluorescent penetrant inspect. Clean, prime, and paint using Section 1.400-approved materials. _____

8. Remove steel tube frames, replacing those specified in Section 2.720. Remove paint from frames not replaced, and visually inspect. Verify no cracks or corrosion. Magnetic particle inspect. Clean, prime, and paint using Section 1.400-approved materials. _____

9. Remove steel cyclic stick. Remove wiring harness. Remove paint, and visually inspect. Verify no cracks or corrosion. Magnetic particle inspect. Clean, prime, and paint using Section 1.400-approved materials. Reinstall wiring harness. _____

10. Remove A121 push-pull tubes. Remove paint, and visually inspect. Verify no cracks or corrosion. Fluorescent penetrant inspect. Clean, prime, and paint using Section 1.400-approved materials. _____

11. Magnetic particle inspect A650 fittings and A337-1 jackshaft. _____

12. Inspect airframe wiring condition. Verify no corrosion, insulation deterioration, or other damage. _____

13. Inspect and pressure test fuel tank(s) and fuel system per Sections 12.120 and 12.260. _____

14. Comply with latest revision of Lycoming Service Instruction 1009. _____

15. Replace additional parts as required per Section 2.720. _____

16. Assemble aircraft. Rig flight controls and rotor systems per Section 10.100. _____

2.710 Inspection Procedure (cont'd)

17. Inspect aircraft per Section 2.400. _____
18. Ground check and run up aircraft per Sections 2.205 and 2.210. _____

> NOTE
>
> Extended low-power operation with new piston rings may prevent proper piston ring seating.

19. Balance fanwheel and tail rotor. _____
20. Track and balance main rotor per Section 10.200. _____
21. Flight check aircraft per Section 2.220. _____
22. Drain, flush, and fill gearboxes per Section 1.100. _____
23. Weigh helicopter and calculate CG per section 1.230. Enter new Basic Empty Weight and CG in helicopter's POH Section 6. _____

2.720 Additional Parts Requiring Replacement on Some R22s

In addition to parts from Section 2.710 Step 3, following parts require replacement with new or overhaul exchange parts as noted:

Part Number	Description	Notes
A014-8	Landing Gear Assembly	Replace A014-8 originally installed on R22 S/N 0002 thru 0487.
A020-2	Upper Frame Assembly	Replace frame S/N 0399 and prior (originally installed on R22 S/N 0002 thru 0311) with subsequent serial number. Note: Frame replacement may require tailcone forward bay replacement.
A044-1	Horizontal Stabilizer	Replace Rev M and prior (originally installed on R22 S/N 0002 thru 0631) with subsequent revision.
A197-1 thru -7	Tail Rotor Drive Shaft Assembly	Originally installed on R22 S/N 0002 thru 0747. Replace with B224-1 driveshaft and appropriate B223 yoke. See R22 IPC.
A493-1	Lower Sheave	Replace Rev H and prior (anodized, originally installed on R22 S/N 0002 thru 0294) with subsequent (steel-sprayed) revision.

2.800 Additional Special Inspections

2.810 Volcanic Ash Recommendations

Flight in visible volcanic ash conditions ("ash cloud") is detrimental to the helicopter and should be avoided. If helicopter has been operated in visible volcanic ash conditions:

1. Refer to Lycoming SI 1530. Wearing suitable protective equipment, use vacuum cleaner followed by compressed air to remove as much debris as possible. Do not use compressed air near main rotor blade drain holes.

2. Refer to R22 Pilot's Operating Handbook (POH) Section 8. Thoroughly clean, wash, and rinse helicopter, including inner circumference of drive belts.

3. Remove main rotor blade tip covers and clean blade tips.

4. Using 10X magnification, visually inspect any exposed main rotor blade skin-to-spar bond line (adhesive) for gaps (empty space between skin and spar). Blade is unairworthy if any gap, including "pin hole(s)", is detected in the bond line. Refinish blade as required.

5. Inspect condition of drive belt sheaves. Replace any sheave having corrosion pitting, flaking, wear thru metalized or anodized coatings, roughness, or sharp ridges. Replace drive belts if either sheave has sharp ridge(s) on drive belt contact surface.

6. Disconnect alternator drive belt from alternator. Spin alternator pulley by hand and verify rotor bearings and brushes operate smoothly; repair alternator as required if roughness or unusual noise is encountered (volcanic ash can enter via unfiltered cooling air). Inspect alternator and ring gear support pulleys and verify no wear steps; replace alternator belt and pulley(s) if wear steps exist. Perform Lycoming SI 1129B alternator belt tension check and adjust as required.

7. Clean airbox interior and:

   a. Inspect air filter and clean or replace as required.

   b. Inspect induction system downstream of air filter (a clean, white glove is beneficial). If volcanic ash is found then:

      i. Clean induction system, disassembling as required.

      ii. Disassemble carburetor or fuel injection servo, as applicable, inspect for internal contamination, and overhaul as required.

      iii. Perform Lycoming SI 1191A Cylinder Compression check.

      iv. Perform Lycoming SB 388C Procedure to Determine Exhaust Valve and Guide Condition.

      v. Inspect spark plug condition; service as required.

8. Remove each magneto's distributor gear inspection plug and inspect visible internal portion for contamination; overhaul magnetos if volcanic ash is found inside (magneto vent plugs are unfiltered).

2.810 Volcanic Ash Recommendations (continued)

9. Inspect engine oil condition. Regardless of oil time-in-service if oil smells bad, is opaque (or is not obviously brown), or if particulates are detectable on the dipstick, change engine oil & oil filter, inspect suction screen and old oil filter, and perform Lycoming SI 1191A Cylinder Compression check if not previously accomplished in step 6.

2.820 Lightning Strike

Lightning strikes are extremely rare for helicopters operating in VFR conditions.

If a lightning strike does occur, RHC recommends performing a 100-hour inspection per § 2.400 and following recommendations for aircraft struck by lightning per Lycoming Service Bulletin No. 401.

High voltage that is well conducted through the aircraft structure will dissipate and cause minimal damage. High voltage that is not well conducted through the aircraft structure can result in excessive heat, which can bake, burn, char, or even melt certain materials. Heat damage may or may not be detectable by visual inspection. A component may not exhibit obvious damage, but temperatures above 300º F can alter the strength of some materials and thus affect a component's service life and airworthiness.

Visually inspect main rotor blades, landing gear, drive train, airframe, and flight controls thoroughly for obvious damage such as electrical arcing or burns, pitting, or cracking. Particular attention should be given to rod ends, journals, etc., where the conductive path is most susceptible. If obvious damage is detected in any of the above-mentioned systems, additional components may require replacement. Contact RHC Technical Support with detailed documentation for further guidance prior to approving aircraft for return to service.

CHAPTER 3

LIFE-LIMITED COMPONENTS

Section	Title	Page
3.000	Life-Limited Components	3.1
3.001	Introduction	3.1
3.002	Time-In-Service Records	3.1
3.003	Fatigue Life-Limited Parts	3.1
3.100	Inspection And Overhaul Requirements	3.2
3.110	Powerplant Overhaul Requirements	3.2
3.120	Aircraft Overhaul Requirements	3.2
3.130	12-Year Inspection and Limited Overhaul Requirements	3.2
3.140	Additional Bearing Replacement Requirements	3.2
3.200	Type Certificate Data Sheet (TCDS)	3.2
3.300	Airworthiness Limitations Section	3.13

Intentionally Blank

CHAPTER 3

LIFE-LIMITED COMPONENTS

3.000 Life-Limited Components

3.001 Introduction

This section lists fatigue life-limited parts and specified overhaul requirements for the R22 helicopter.

3.002 Time-In-Service Records

It is the operator's responsibility to maintain accurate time-in-service records for the airframe, engine, and life-limited components. R22s are equipped with either an oil-pressure-activated hourmeter which records engine run time or a collective-activated hourmeter which records flight (collective up) time. Either method may be used to track time in service, however numerical values for service lives depend on the tracking method used (refer to § 3.300).

Calendar time in service for the airframe and engine begins on the date of the original RHC-issued Export (or Standard) Certificate of Airworthiness for the helicopter. Calendar time in service for spares without a storage limit (refer to § 1.490) begins on the date of the RHC-issued Airworthiness Approval Tag (Authorized Release Certificate) issued with the invoice.

When installing a life-limited part or a part with an overhaul requirement, record in the helicopter maintenance record the installation date, part number, part name, serial number, helicopter total time, and time in service accumulated by part since new or since last overhaul, as applicable.

WARNING

Components with mandatory overhaul or retirement intervals whose time-in-service is not reliably documented cannot be considered airworthy and must be removed from service.

3.003 Fatigue Life-Limited Parts

The Airworthiness Limitations Section lists the mandatory replacement schedule for fatigue life-limited parts.

Listed items must be removed from the helicopter at the specified intervals and permanently retired from service by destroying or damaging each part so it cannot inadvertently be returned to service. Fatigue lives are based upon normal flight service, including 6 rotor stop-starts and 10 autorotation entries per hour.

3.100 Inspection and Overhaul Requirements

WARNING

Suspected damaged parts removed from damaged aircraft are not to be reinstalled in any aircraft unless part has been returned to RHC, together with its damage history, for inspection and is found by RHC to be airworthy.

3.110 Powerplant Overhaul Requirements

The engine must be overhauled in accordance with the engine manufacturer's overhaul recommendations and procedures. Refer to latest revision of Textron Lycoming Service Instructions No. 1009.

3.120 Aircraft Overhaul Requirements

The complete airframe, including rotor systems, drive system, control system, and fuselage, must be overhauled as instructed by Robinson Helicopter Company when any of the following occur:

1. When the helicopter has been operated for 2200 hours since new or since last overhaul.
2. When an inspection of the helicopter indicates extensive subsurface corrosion in the primary structure, drive system or control system.
3. When the helicopter condition has deteriorated so the helicopter can no longer meet the performance, controllability or safety specifications given in the Pilot's Operating Handbook.
4. When the aircraft has been in service for twelve years since new or since last overhaul, regardless of the hours flown.

3.130 12-Year Inspection and Limited Overhaul Requirements

The helicopter must be inspected and specified components replaced per § 2.600 when the aircraft has been in service for twelve years since new or since last overhaul.

3.140 Additional Bearing Replacement Requirements

R22 main rotor gearbox assemblies S/N 0002 thru 0232 must be returned to RHC for replacement of original pinion bearings at first 1000 hours time in service.

3.200 Type Certificate Data Sheet (TCDS)

The Robinson R22-series Type Certficate Data Sheet (TCDS) reprinted on the following pages is subject to revision.

Visit the FAA Aircraft Certification Regulatory and Guidance Library online databases for TCDS revision status at: http://rgl.faa.gov.

DEPARTMENT OF TRANSPORTATION
FEDERAL AVIATION ADMINISTRATION

H10WE
REVISION 15
ROBINSON
R22
R22 ALPHA
R22 BETA
R22 MARINER

August 15, 2013

TYPE CERTIFICATE DATA SHEET NO. H10WE

This data sheet, which is a part of Type Certificate No. H10WE, prescribes conditions and limitations under which the product for which the type certificate was issued meets the airworthiness requirements of Title 14 of the Code of Federal Regulations.

Type Certificate Holder: Robinson Helicopter Company
2901 Airport Drive
Torrance, California 90505

I. Model R22 Helicopter (Normal Category), Approved March 16, 1979

Engine: Lycoming O-320-A2B or O-320-A2C or O-320-B2C (See NOTES 5 & 6)

Fuel: 80/87 minimum grade aviation gasoline (for O-320-A2B and A2C)
91/96 UL minimum grade aviation gasoline (for all engines)
100 LL minimum grade aviation gasoline (for all engines)
100/130 minimum grade aviation gasoline (for O-320-B2C)

Engine Limits for all operations: Maximum rpm 2652 (124 hp) (104%)
See RFM for maximum manifold pressure corresponding to 124 hp.
See RFM for altitude limitations.

Rotor Limits

Power Off (Rotor Tach.)	Power On (Rotor Tach.)
Maximum (110%) 561 rpm	(104%) 530 rpm
Minimum (90%) 459 rpm	(97%) 495 rpm

Airspeed Limits (CAS): V_{ne} (never exceed) Power On and Power Off 98 KCAS sea level to 3,000 feet density altitude, decreasing to 83 KCAS at 8,000 feet density altitude, decreasing to 56 KCAS at 14,000 feet density altitude. Straight line variation between points.

Altitude Limits: Density Altitude Limit - 14,000 feet

CG Range

Longitudinal CG	GW	Lateral CG
	Minimum 920 pounds to	
95.5	1225	+1.0R - 0.8L
96.5	1300	
97.0		- 2.2L
97.5		- 2.2L
98.0		+2.6R
100.0	1300	
101.5	1130	+1.2R - 0.7L

Straight Line Variation Between Points shown. See Figure 1.

Page No.	1	2	3	4	5	6	7	8	9	10
Rev. No.	15	15	15	15	15	14	15	14	14	14

H10WE Page 2 of 10

I. Model R22 Helicopter (Normal Category), Approved March 16, 1979, (cont'd)

Maximum Gross Weight: 1300 lbs.

No. Seats: 2 (See NOTE 1)

Minimum Weight: 920 lbs.

Maximum Baggage: 50 pounds of baggage and installed equipment in either baggage compartment, except combined seat load plus baggage and equipment not to exceed 240 pounds.

Fuel Capacity

Tank	Tanks Without Bladders		Tanks With Bladders		Location (STA)
	Capacity (gal.)	Usable (gal.)	Capacity (gal.)	Usable (gal.)	
Main	19.8	19.2	18.3	16.9	108.6
Auxiliary	N/A	N/A	9.7	9.4	103.8

Oil Capacity: Engine Oil, 1.5 Gals. at STA 104.8;
Transmission oil, 0.3 Gal. at STA 100.

Rotor Blade and Control Movements: For rigging information refer to R22 Maintenance Manual

Serial Nos. Eligible: 0002 thru 0300
0302 thru 0349
0352 thru 0356

II. Model R22 ALPHA Helicopter (Normal Category), Approved October 12, 1983

Engine: Lycoming O-320-B2C

Fuel: 91/96 UL minimum grade aviation gasoline
100 LL minimum grade aviation gasoline
100/130 minimum grade aviation gasoline

Engine Limits for all operations: Maximum rpm 2652 (124 hp) (104%)
See RFM for maximum manifold pressure corresponding to 124 hp.
See RFM for altitude limitations.

Rotor Limits

Power Off (Rotor Tach.)	Power On (Rotor Tach.)
Maximum (110%) 561 rpm	(104%) 530 rpm
Minimum (90%) 459 rpm	(97%) 495 rpm

Airspeed Limits (CAS): V_{ne} (never exceed) Power On and Power Off 98 KCAS sea level to 3,000 feet density altitude , decreasing to 83 KCAS at 8,000 feet density altitude, decreasing to 56 KCAS at 14,000 feet density altitude. Straight line variation between points.

Altitude Limits: Density Altitude Limit - 14,000 feet

H10WE Page 3 of 10

II. Model R22 ALPHA Helicopter (Normal Category), Approved October 12, 1983, (cont'd)

CG Range

Longitudinal CG	GW	Lateral CG
	Minimum 920 pounds to	
95.5	1275	+1.0R - 0.8L
96.5	1370	
97.0		- 2.2L
98.0		+ 2.6R -2.2L
100.0	1370	
102.0	1175	+1.2R - 0.5L

Straight Line Variation Between Points Shown. See Figure 2.

If empty weight CG arm (moment/empty weight) is greater than 104.8, fixed ballast must be installed in the helicopter's nose at F.S. 38.0 to allow a minimum solo pilot weight of 130 pounds. (Minimum pilot weight with auxiliary fuel tank is 135 pounds.)

Maximum Gross Weight: 1370 lbs.

No. Seats: 2 (Pilot Location STA 78.0)

Minimum Weight: 920 lbs.

Maximum Baggage: 50 pounds of baggage and installed equipment in either baggage compartment, except combined seat load plus baggage and equipment not to exceed 240 pounds.

Fuel Capacity

Tank	Tanks Without Bladders		Tanks With Bladders		Location (STA)
	Capacity (gal.)	Usable (gal.)	Capacity (gal.)	Usable (gal.)	
Main	19.8	19.2	18.3	16.9	108.6
Auxiliary	10.9	10.5	9.7	9.4	103.8

Oil Capacity: Engine oil, 1.5 Gals. at STA 104.8;
Transmission oil, 0.3 Gal. at STA 100.

Rotor Blade and Control Movements: For rigging information refer to R22 Maintenance Manual.

Serial Nos. Eligible: 0301, 0350, 0351, 0357 thru 0500, excluding 0364

III. Model R22 BETA Helicopter (Normal Category), Approved August 12, 1985

The R22 BETA Helicopter includes a 131 hp. takeoff rating. A larger oil cooler and associated installation changes were made to permit the 131 hp. takeoff rating with the O-320 engine.

Engine: Lycoming O-320-B2C or O-360-J2A (See NOTE 11)

Fuel: 91/96 UL minimum grade aviation gasoline
100 LL minimum grade aviation gasoline
100/130 minimum grade aviation gasoline

Engine Limits for all operations: Maximum continuous (124 hp.) 2652 rpm (104%)
Takeoff (5 minutes) (131 hp.) 2652 rpm (104%)
See RFM for maximum manifold pressure corresponding to hp. rating and ambient conditions. See RFM for altitude limitations.

Rotor Limits

Power Off (Rotor Tach) for O-320-B2C and O-360-J2A	Power On (Rotor Tach) for O-320-B2C	Power On (Rotor Tach) for O-360-J2A
Maximum (110%) 561 rpm	(104%) 530 rpm	(104%) 530 rpm
Minimum (90%) 459 rpm	(97%) 495 rpm	(101%) 515 rpm

H10WE Page 4 of 10

III. Model R22 BETA Helicopter (Normal Category), Approved August 12, 1985, (cont'd)

Airspeed Limits (CAS)

V_{ne} (never exceed) Power On and Power Off 98 KCAS sea level to 3,000 feet density altitude, decreasing to 83 KCAS at 8,000 feet density altitude, decreasing to 56 KCAS at 14,000 feet density altitude. Straight line variation between points.

Altitude Limits

Density Altitude Limit - 14,000 feet

CG Range

Longitudinal CG	GW	Lateral CG
	Minimum 920 pounds to	
95.5	1275	+1.0R - 0.8L
96.5	1370	
97.0		- 2.2L
98.0		+2.6R - 2.2L
100.0	1370	
102.0	1175	+1.2R - 0.5L

Straight Line Variation Between Points Shown. See Figure 2.
If empty weight CG arm (moment/empty weight) is greater than 104.8, fixed ballast must be installed in the helicopter's nose at F.S. 38.0 to allow a minimum solo pilot weight of 130 pounds. (Minimum pilot weight with auxiliary fuel tank is 135 pounds.)

Maximum Gross Weight

1370 lbs.

No. Seats

2 (Pilot Location STA 78.0)

Minimum Weight

920 lbs.

Maximum Baggage

50 pounds of baggage and installed equipment in either baggage compartment, except combined seat load plus baggage and equipment not to exceed 240 pounds.

Fuel Capacity

Tank	Tanks Without Bladders		Tanks With Bladders		Location (STA)
	Capacity (gal.)	Usable (gal.)	Capacity (gal.)	Usable (gal.)	
Main	19.8	19.2	18.3	16.9	108.6
Auxiliary	10.9	10.5	9.7	9.4	103.8

Oil Capacity

Engine oil, 1.5 Gals. at STA 104.8;
Transmission oil, 0.3 Gal. at STA 100.

Rotor Blade and Control Movements

For rigging information refer to R22 Maintenance Manual.

Serial Nos. Eligible

0501 and subsequent

IV. Model R22 MARINER Helicopter (Normal Category), Approved September 12, 1985

The R22 MARINER helicopter includes two inflatable floats, additional corrosion protection, 131 hp. takeoff rating, tailcone with nose-up horizontal stabilizer mounting angle and float stabilizer in place of the tail skid. The helicopter can be used with or without floats. (See NOTE 9)

Engine

Lycoming O-320-B2C or O-360-J2A (See NOTE 11)

Fuel

91/96 UL minimum grade aviation gasoline
100 LL minimum grade aviation gasoline
100/130 minimum grade aviation gasoline

Engine Limits for all operations

Maximum continuous (124 hp.) 2652 rpm (104%)
Takeoff (5 minutes) (131 hp.) 2652 rpm (104%)
See RFM for maximum manifold pressure corresponding to hp. rating and ambient conditions. See RFM for altitude limitations.

H10WE Page 5 of 10

IV. Model R22 MARINER Helicopter (Normal Category), Approved September 12, 1985, (cont'd)

Rotor Speed Limits

Power Off (Rotor Tach) for O-320-B2C and O-360-J2A	Power On (Rotor Tach) for O-320-B2C	Power On (Rotor Tach) for O-360-J2A
Maximum (110%) 561 rpm	(104%) 530 rpm	(104%) 530 rpm
Minimum (90%) 459 rpm	(97%) 495 rpm	(101%) 515 rpm

Airspeed Limits (CAS)

With Floats Installed

V_{ne} (never exceed) Power On 91 KCAS sea level to 3,000 feet density altitude, decreasing to 77 KCAS at 7,500 feet density altitude, decreasing to 50 KCAS at 14,000 feet density altitude. Straight line variation between points.

V_{ne} (never exceed) Power Off 77 KCAS sea level to 7,500 feet density altitude, decreasing to 50 KCAS at 14,000 feet density altitude. Straight line variation between points.

Without Floats Installed

V_{ne} (never exceed) Power On and Power Off 98 KCAS sea level to 3,000 feet density altitude, decreasing to 83 KCAS at 8,000 feet density altitude, decreasing to 56 KCAS at 14,000 feet density altitude. Straight line variation between points.

Altitude Limits

Density Altitude Limit - 14,000 feet

CG Range

With Floats Installed:

Longitudinal CG	GW	Lateral CG
	Minimum 920 pounds to	
95.5	1275	+1.0R - 0.8L
96.5	1370	
97.0		- 2.2L
98.0		+2.6R - 2.2L
100.0	1370	
101.0	1207	+1.3R - 1.0L

Without Floats Installed:

Longitudinal CG	GW	Lateral CG
	Minimum 920 pounds to	
95.5	1275	+1.0R - 0.8L
96.5	1370	
97.0		- 2.2L
98.0		+2.6R - 2.2L
100.0	1370	
101.5	1125	+1.1R - 0.8L

Straight Line Variation Between Points Shown. See Figure 3.

Maximum Gross Weight

1370 pounds

No. Seats

2 (Pilot Location STA 78.0)

Minimum Weight

920 pounds

Maximum Baggage

50 pounds of baggage and installed equipment in either baggage compartment, except combined seat load, plus baggage and equipment not to exceed 240 pounds.

Fuel Capacity

Tank	Tanks Without Bladders		Tanks With Bladders		Location (STA)
	Capacity (gal.)	Usable (gal.)	Capacity (gal.)	Usable (gal.)	
Main	19.8	19.2	18.3	16.9	108.6
Auxiliary	10.9	10.5	9.7	9.4	103.8

H10WE Page 6 of 10

IV. Model R22 MARINER Helicopter (Normal Category), Approved September 12, 1985, (cont'd)

Oil Capacity	Engine oil, 1.5 Gals. at STA 104.8; Transmission oil, 0.3 Gal. at STA 100.
Rotor Blade and Control Movements	For rigging information refer to R22 Maintenance Manual.
Serial No. Eligible	0364, 0501 and subsequent (Suffix "M" added to all MARINERs.)

DATA PERTINENT TO ALL MODELS

Datum	100 inches forward of main rotor centerline.
Leveling Means	Refer to the Weight and Balance Section of the R22 Rotorcraft Flight Manual.
Certification Basis	14 CFR Part 27 dated February 1, 1965, including Amendments 27-1 through 27-10. § 27.1559 of Amendment 27-21 is an option for all S/Ns. National Environmental Act of 1969 Noise Control Act of 1972 Equivalent Safety Finding: Number TD10352LA-R/S-1 14 CFR Part 27.1401(d), Anticollision Light System
Production Basis	Production Certificate No. 424WE, dated March 6, 1981
Equipment	The basic required equipment as prescribed in the applicable airworthiness regulations (See Certification Basis) must be installed in the helicopter for certification. In addition, the following FAA-approved Rotorcraft Flight Manual is required: R22 R22 Rotorcraft Flight Manual dated March 16, 1979, or later revision. R22 ALPHA R22 Rotorcraft Flight Manual dated March 16, 1979, with revisions through October 12, 1983 or later (see NOTE 8). R22 BETA with O-320-B2C R22 Rotorcraft Flight Manual dated March 16, 1979, with revisions through August 7, 1985 or later (see NOTE 8). R22 BETA with O-360-J2A R22 Rotorcraft Flight Manual dated March 16, 1979,with revisions through August 7, 1985 or later. For R22 Rotorcraft Flight Manual with revisions prior to October 13, 2000, Flight Manual Supplement 7 dated January 31, 1996, or later revision, is required (see NOTE 8). R22 MARINER with O-320-B2C R22 Rotorcraft Flight Manual dated March 16, 1979, with revisions through August 7, 1985 or later, and Flight Manual Supplement 4 dated September 9, 1985, or later revision. R22 MARINER with O-360-J2A R22 Rotorcraft Flight Manual dated March 16, 1979, with revisions through August 7, 1985 or later, and Flight Manual Supplement 4 dated September 9, 1985, with revisions through October 13, 2000 or later. For R22 Rotorcraft Flight Manual with revisions prior to October 13, 2000, Flight Manual Supplement 8 dated January 31, 1996, or later revision, is required in place of Flight Manual Supplement 4.

ALL MODELS
If fuel tanks with bladders are installed: R22 Rotorcraft Flight Manual dated March 16, 1979, with revisions through February 15, 2013 or later. R22 Mariners also require Flight Manual Supplement 4 as noted above. Also see Note 8.

GENERAL NOTES

NOTE 1. Current weight and balance report, including list of equipment included in certificated empty weight , and loading instructions, when necessary, must be provided for each helicopter at the time of original certification and at all times thereafter (except in the case of operators having an approved weight control system).

See Flight Manual loading section for variations of fuel weight and moment-arm with variations of fuel quantity.

Pilot Location STA 79.0 for helicopter S/Ns 0002 thru 0255 and STA 78.0 for helicopter S/Ns 0256 and subsequent and helicopters in which Robinson P/N seats A466-1 and A467-1 have been replaced by Robinson P/N seats A932-1 and A928-1.

NOTE 2. One of the following placards must be installed in clear view of the pilot:
"THE MARKINGS AND PLACARDS INSTALLED ON THIS HELICOPTER CONTAIN OPERATING LIMITATIONS WHICH MUST BE COMPLIED WITH WHEN OPERATING THIS ROTORCRAFT. OTHER OPERATING LIMITATIONS WHICH MUST BE COMPLIED WITH WHEN OPERATING THIS ROTORCRAFT ARE CONTAINED IN THE ROTORCRAFT FLIGHT MANUAL."

Or: "THIS ROTORCRAFT APPROVED FOR DAY AND NIGHT VFR OPERATIONS"

For the R22 MARINER:
"THIS ROTORCRAFT APPROVED FOR DAY AND NIGHT VFR OPERATIONS WITHOUT FLOATS INSTALLED OR DAY VFR OPERATIONS ONLY WITH FLOATS INSTALLED."

For additional placards, see R22 Rotorcraft Flight Manual.

NOTE 3. Retirement time of critical components is contained in the FAA approved "AIRWORTHINESS LIMITATIONS" section of the Robinson R22 Maintenance Manual. The values of retirement or service life and inspection intervals cannot be changed without FAA Engineering approval.

NOTE 4. Deleted as of April 11, 1988.

NOTE 5. Lycoming O-320-A2C, with Retard Magneto Starting System, eligible on S/Ns 0002 thru 0300, 0302 thru 0349, and 0352 thru 0356 helicopters.

NOTE 6. Lycoming O-320-B2C installed on S/Ns 0175 and 0200 thru 2570 in production. It may be installed in prior S/N helicopters if the following parts are changed; Robinson P/Ns B193-2 (Window Plate - Instrument Cluster), A145-3 (Engine), A600-2 (Manifold Pressure Gauge), and A654-40 & -41 (Decals).

NOTE 7. Deleted as of April 25, 2001.

NOTE 8. The R22 "Police Helicopter" configuration requires Flight Manual Supplement 3, dated March 27, 1984 or later.

NOTE 9. The R22 MARINER with floats installed is limited to daylight VFR operation only.

NOTE 10. R22 ALPHA S/N 0364 was converted to an R22 MARINER by the manufacturer. The original R22 ALPHA dataplate was removed and replaced with an R22 MARINER data plate S/N 0364M.

NOTE 11. Lycoming O-360-J2A installed on S/N 2571 and subsequent in production. Retrofit installation of the O-360-J2A engines may only be accomplished at the Robinson Helicopter Company.

H10WE Page 8 of 10

NOTE 12. Any changes to the type design of this helicopter by means of an amended type certificate (TC), supplemental type certificate (STC), or amended STC, requiring instructions for continued airworthiness (ICA's) must be submitted through the project aircraft certification office (ACO) for review and acceptance by the Fort Worth -Aircraft Evaluation Group (FTW-AEG) Flight Standards District Office (FSDO) prior to the aircraft delivery, or upon issuance of the first standard airworthiness certificate for the affected aircraft, whichever occurs later as prescribed by Title 14 CFR 21.50. Type design changes (major repairs or alterations) by means of a FAA Form 337 (field approval) that require ICA's must have those ICA's reviewed by the field approving FSDO.

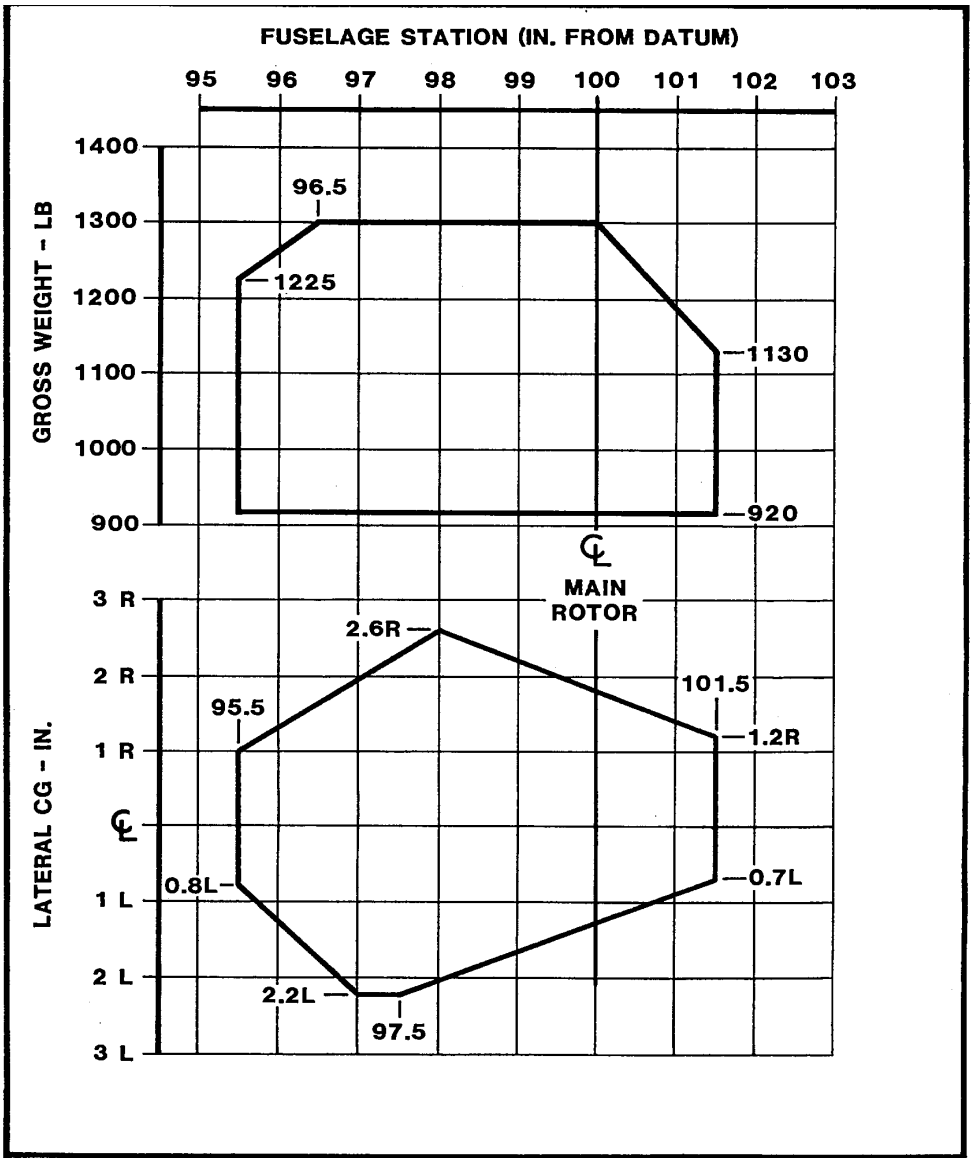

R22
FIGURE 1

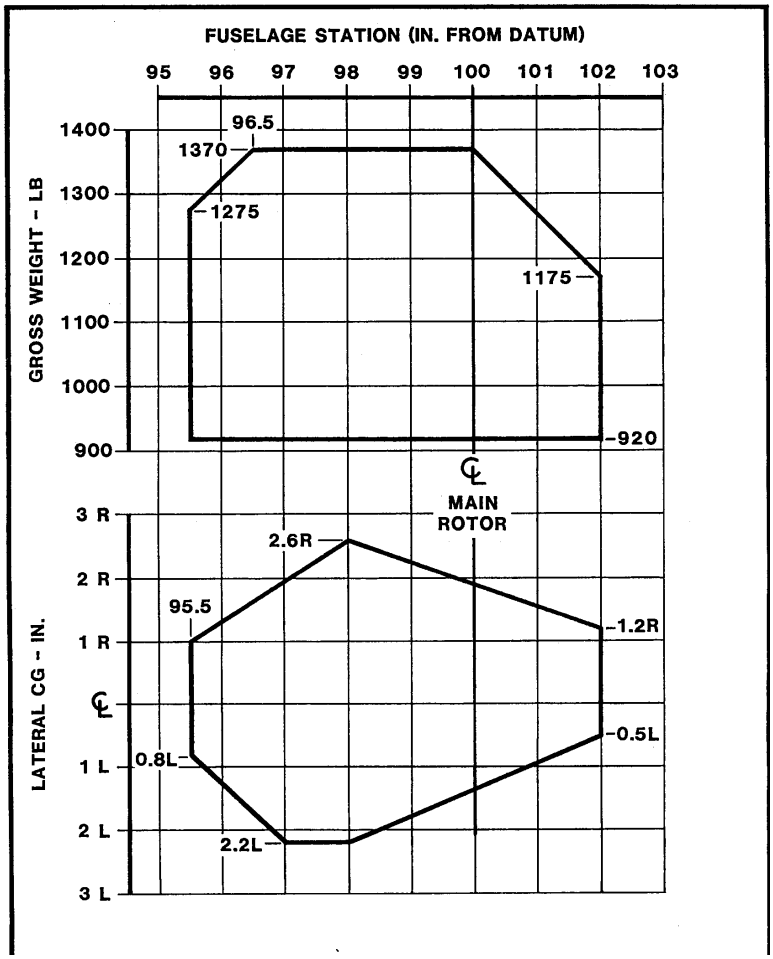

R22 ALPHA AND BETA
FIGURE 2

WITH FLOATS _____
WITHOUT FLOATS ___ ___ ___ ___

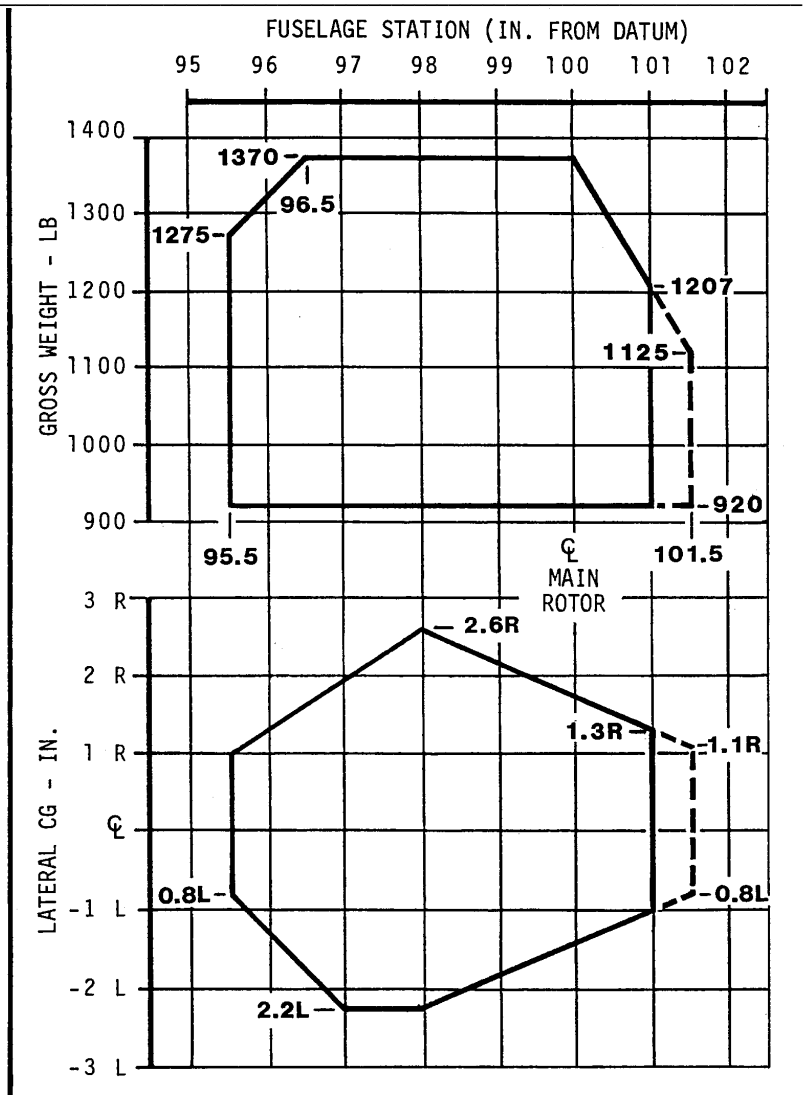

R22 MARINER
FIGURE 3

.....END.....

3.300 Airworthiness Limitations

The Airworthiness Limitations Section is FAA approved and specifies inspections and other maintenance required under 14 CFR §§ 43.16 and 91.403, unless an alternative program has been FAA approved.

Time in service may be tracked based on engine run time or based on flight (collective up) time. Either method may be used, however numerical values for service lives depend on the tracking method used.

R22 Fatigue Life-Limited Parts

Use the following lives if time is tracked based on engine run time as recorded by an oil-pressure-activated hourmeter:

Part Number	Description	Maximum Service Life
A016-2 (Retired by AD 2004-19-09)	Main Rotor Blade	2200 Hours or 10 years[1]
A016-4 and -6	Main Rotor Blade	2200 Hours or 12 years[1]
A029-1 and -2	Tail Rotor Blade	2200 Hours or 12 years[1]
A146-1	Pinion, Main Rotor Gearbox (O-360 Engine)	2200 Hours
A158-3	Main Rotor Spindle	2200 Hours
B545-1	Gear Set, Tail Rotor Gearbox	2200 Hours
NAS630-80 (or MS21250-10080)	Coning Hinge Bolt	2200 Hours
NAS1351-4-20 (or A722-1 or -2)	Pitch Horn Screws	2200 Hours
NAS6604 (or NAS1304)	Tail Rotor Blade-to-Hub Attach Bolt	2200 Hours
A158-1	Main Rotor Spindle	2415 Hours[2]
A020-2	Upper Frame, Rev R & Prior	4200 Hours
A020-2 and -90	Upper Frame, Rev S & Subsequent	4400 Hours
A023-1, -20, -22, and -23	Tailcone Assembly	4400 Hours
A047-1 and -6	Upper Frame	4400 Hours
A154-1	Main Rotor Hub	4400 Hours
B370-1	Main Rotor Hub	4400 Hours
A020-84	Lower R.H. Frame	5110 Hours
A046-2	Lower R.H. Frame	5110 Hours
A062-2	Tail Rotor Hub	6000 Hours
A030-1	Tail Rotor Hub Assembly	6260 Hours

[1] Whichever limit occurs first. Calendar time starts on date of original RHC-issued Airworthiness Approval.
[2] Subject to AD 88-26-01 R2 compliance.

3.300 Airworthiness Limitations (cont'd)

R22 Fatigue Life-Limited Parts (cont'd)

Use the following lives if time is tracked based on flight (collective up) time as recorded by a collective-activated hourmeter:

Part Number	Description	Maximum Service Life
A016-2 (Retired by AD 2004-19-09)	Main Rotor Blade	1964 Hours or 10 years[1]
A016-4	Main Rotor Blade	1964 Hours or 12 years[1]
NAS630-80 (or MS21250-10080)	Coning Hinge Bolt	1964 Hours
NAS1351-4-20 (or A722-1 or -2)	Pitch Horn Screws	1964 Hours
A158-1	Main Rotor Spindle	2156 Hours[2]
A016-6	Main Rotor Blade	2200 Hours or 12 years[1]
A029-1 and -2	Tail Rotor Blade	2200 Hours or 12 years[1]
A146-1	Pinion, Main Rotor Gearbox	2200 Hours
A158-3	Main Rotor Spindle	2200 Hours
A188-2	Sprag Clutch Assembly	2200 Hours
A647-1	Bearing, Main Rotor Shaft	2200 Hours or 12 years[1]
A647-6	Bearing, Tail Rotor Pitch Control	2200 Hours or 12 years[1]
A647-8	Bearing, Damper Assembly	2200 Hours or 12 years[1]
B545-1	Gear Set, Tail Rotor Gearbox	2200 Hours
NAS6604 (or NAS1304)	Tail Rotor Blade-to-Hub Attach Bolt	2200 Hours
A020-2	Upper Frame, Rev R & Prior	3750 Hours
A154-1	Main Rotor Hub	3928 Hours
A020-2 and -90	Upper Frame, Rev S & Subsequent	4400 Hours
A020-84	Lower R.H. Frame	4400 Hours
A023-1, -20, -22, and -23	Tailcone Assembly	4400 Hours
A046-2	Lower R.H. Frame	4400 Hours
A047-1 and -6	Upper Frame	4400 Hours
A062-2	Tail Rotor Hub	4400 Hours
B370-1	Main Rotor Hub	4400 Hours
A030-1	Tail Rotor Hub Assembly	5589 Hours

[1] Whichever limit occurs first. Calendar time starts on date of original RHC-issued Airworthiness Approval.
[2] Subject to AD 88-26-01 R2 compliance.

Approved By: _____ Date: 3/10/16

Manager, Federal Aviation Administration
Los Angeles Aircraft Certification Office

FAA Approved: This and the previous page constitute the Airworthiness Limitations Section in its entirety, are considered segregated from the rest of the document, and set forth the FAA-approved mandatory replacement times for fatigue life-limited parts.

CHAPTER 4

AIRFRAME

Section	Title	Page
4.000	Airframe	4.1
4.001	Introduction	4.1
4.002	Description	4.1
4.100	Fuselage	4.1
4.110	Cabin Assembly	4.1
4.120	Windshield Assembly	4.2
4.121	Windshield Removal	4.2
4.122	Windshield Installation	4.2
4.123	Windshield Replacement	4.3
4.130	Door Removal and Installation	4.4
4.140	Fairing, Cowling and Inspection Panels	4.4
4.141	Side Skirts	4.4
4.142	Mast Fairing	4.6
4.143	Aft Cowling	4.6
4.144	Cabin Inspection Panels	4.6
4.200	Welded Steel Tube Frame Assemblies	4.7
4.210	Left-Hand Frame Assembly	4.8
4.211	Left-Hand Frame Removal	4.8
4.212	Left-Hand Frame Installation	4.8
4.220	Right-Hand Frame Assembly	4.9
4.221	Right-Hand Frame Removal	4.9
4.222	Right-Hand Frame Installation	4.12
4.230	Upper Frame Assembly	4.13
4.231	Upper Frame Removal	4.13
4.232	Upper Frame Installation	4.14
4.240	Strut Assembly Removal and Installation	4.15
4.300	Tailcone And Empennage	4.16
4.310	Tailcone	4.16
4.311	Tailcone Removal	4.16
4.312	Tailcone Installation	4.16
4.313	Tailcone Replacement	4.17
4.314	Tailcone Repair	4.22
4.320	Empennage Assembly	4.22
4.321	Empennage Removal	4.22

CHAPTER 4

AIRFRAME (Continued)

Section	Title	Page
4.322	Empennage Installation	4.23
4.323	Upper Stabilizer Replacement	4.23
4.324	Lower Stabilizer Replacement	4.23
4.325	Horizontal Stabilizer Replacement	4.24

CHAPTER 4

AIRFRAME

4.000 Airframe

4.001 Introduction

This section contains procedures for removal and installation of the cabin components, steel tube structures, tailcone and empennage.

4.002 Description

The R22 is a two-place, single main rotor, single engine helicopter constructed primarily of metal and equipped with skid-type landing gear.

The primary fuselage structure is welded steel tubing and riveted aluminum sheet. The tailcone is a monocoque structure in which aluminum skins carry primary loads. Fiberglass and thermoplastics are used in the secondary cabin structure, engine cooling shrouds, and various other ducts and fairings. The cabin doors are also constructed of fiberglass and thermoplastics.

A right-side cowl door provides access to the main gearbox and drive system. Additional access to controls and other components for maintenance is provided by removable panels and cowlings.

Stainless steel firewalls are located forward of and above the engine.

Both cabin doors may be removed and installed by maintenance personnel or pilots. To remove a door, remove cotter pins in upper and lower hinges, then open and lift door off. To install doors, use reverse procedure. Adjust weight and balance as required when removing and installing doors.

4.100 Fuselage

4.110 Cabin Assembly

The cabin assembly is a non-field replaceable assembly.

4.120 Windshield Assembly

The windshield is made of transparent plexiglass set in a weather-tight silicone sealer and is screwed to the cabin structure.

4.121 Windshield Removal

a. Remove door and hinges.

> NOTE
>
> To prevent scratches in the windshield, a protective cover should be taped to the inside and outside of the windshield prior to removal.

b. Remove screws and side retainer holding windshield.

c. Reinstall hinges and doors for cabin structure support with window removed.

d. Remove screws and retainers (upper, lower and middle) holding windshield.

e. Clean silicone sealant off retainers.

f. Clean silicone sealant off windshield for re-installation.

4.122 Windshield Installation

a. Remove all old sealant on cabin, retainers and windshield.

b. Tape edge of windshield with 3/4" polyvinyl chloride tape.

c. Install windshield and cleco retainer strips.

d. Mask windshield along edge of retainer strips with 1/2" masking tape. This will catch silicone gel squeeze-out on installation of retainer strips.

e. Remove the retainer strips.

f. To ensure a proper seal, run a bead of B270-13 silicone gel along entire edge of tape line.

g. Holding windshield in place, cleco retainer strips (center, upper and lower) onto windshield.

4.122 Windshield Installation (cont'd)

h) Tighten center retainer strip first making sure that the doors are installed and secure.

i) When center, upper and lower retaining strips are secure, remove the door and hinges for side strip installation.

NOTE

One person will have to tighten nuts from inside.

j) Install side retainer strip.

k) Reinstall hinges and door. Ensure all fasteners are tight.

l) Fill any gap between retainer and window with silicone gel.

m) Remove masking tape next to retainers. Be careful not to smear wet silicone.

n) Clean any silicone gel off windshield area after it has been allowed to dry.

4.123 Windshield Replacement

a) Remove all old sealant on cabin and retainers if they are to be reused.

b) Cleco all window retaining strips in place, checking for proper alignment.

c) Install hinges and doors in door frames and secure. Remove the bottom and center retaining strips, leaving the side retaining strip to hold the door and door frame in position.

d) Hold windshield in place by hand, and align it with frame according to contour of frame and windshield.

e) Mark windshield for trim using non-permanent marker, such as grease pencil or masking tape.

f) Trim to mark. Band saw recommended. Band saw blade should contain at least 24 teeth per inch.

4.123 Windshield Replacement (cont'd)

NOTE

Tape the cardboard to band saw table to prevent scratching of the windshield. Saw carefully to prevent binding of the band saw blade or windshield cracks may occur.

g) Hold windshield in place and check for fit. Re-trim as necessary.

h) After windshield is fitted, carefully sand the edges smooth.

i) See Section 4.122 Windshield Installation.

4.130 Door Removal and Installation

To remove the doors:

a) Remove cotter pin holding the upper door hinge together.

b) Remove doors by opening latch and lifting door to disengage hinges.

c) If required, door hinges can be removed by removing attaching screws.

To install the doors:

a) Install door hinges if removed.

b) Install doors by aligning pin of door hinges and slide door down to lock into cabin hinges simultaneously.

c) Install cotter pin in the upper hinge.

4.140 Fairing, Cowling and Inspection Panels

4.141 Side Skirts

CAUTION

This is a structural panel assembly and must be installed for run up and flight.

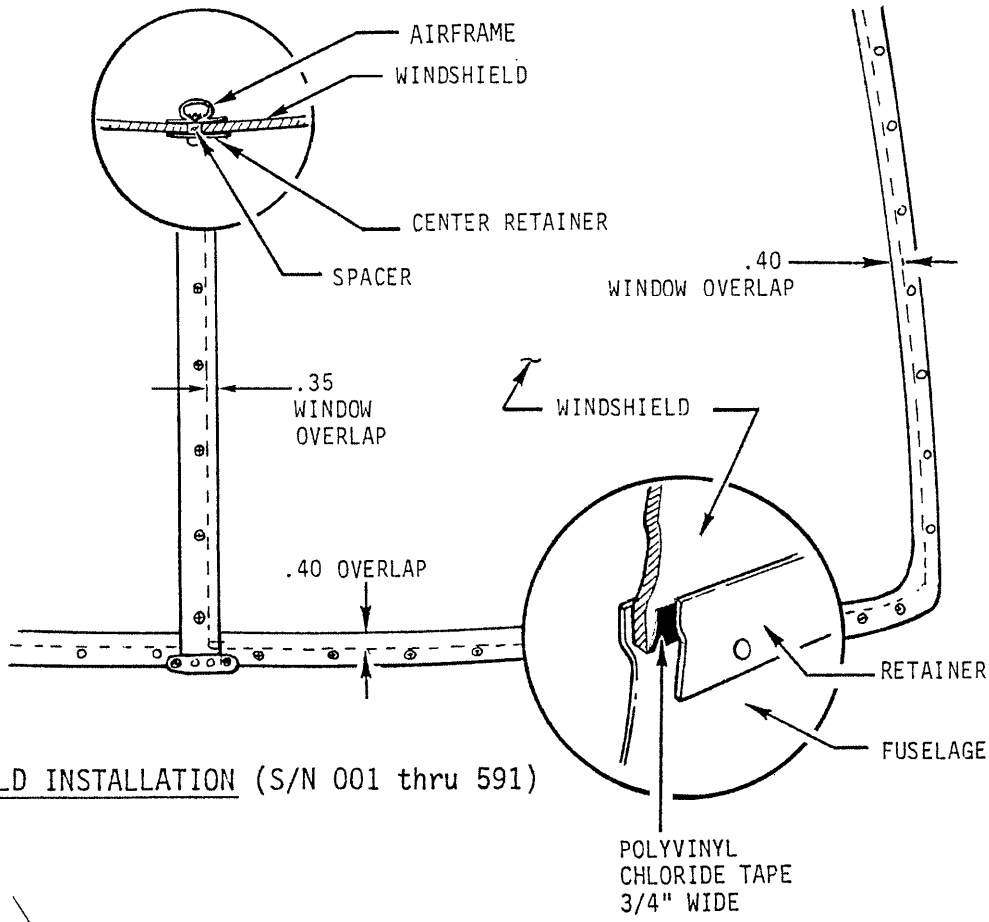

WINDSHIELD INSTALLATION (S/N 001 thru 591)

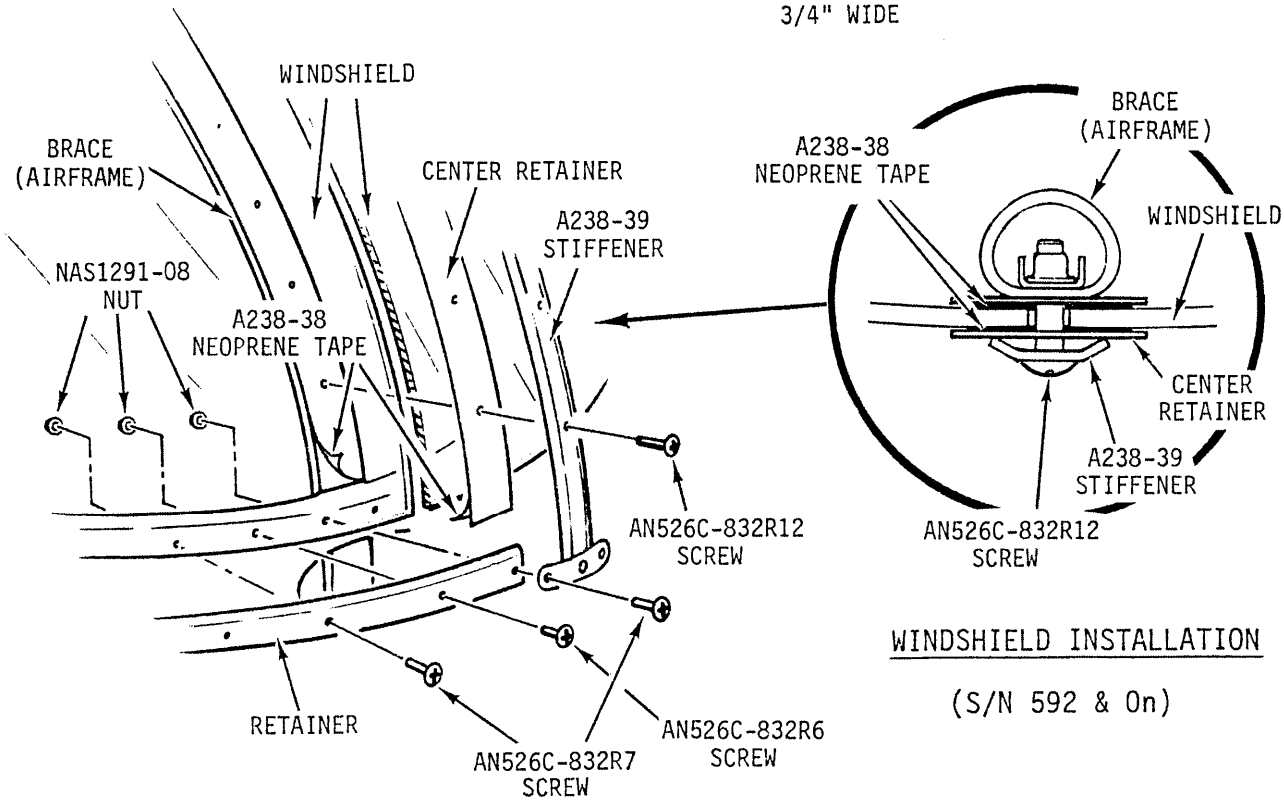

WINDSHIELD INSTALLATION

(S/N 592 & On)

4.142 Mast Fairing

CAUTION

Mast Fairing must be installed for flight.

The mast fairing upper rib is mounted to swashplate tube assembly. The lower rib is clamped to main rotor gearbox mast assembly.

The pitot tube is mounted on lower front of mast fairing.

The fuel tank vent is installed through lower rib of mast fairing. (Vent should have approximately 0.30 inch clearance from the aft cowling.)

4.143 Aft Cowling

CAUTION

Aft cowling must be installed for flight.

The aft cowling is a two-piece, sheet-aluminum structure with a removable tailcone rain guard.

4.144 Cabin Inspection Panels

CAUTION

All cabin inspection panels must be installed for flight. With the exception of side skirts, all panels may be left off for run-up.

1. Seat Backs: Left side seat back has fuel valve attached. Back cushions are installed using blind rivets.

2. Cyclic Control Inspection Panels - 4 panels:

   a. Center belly panel

   b. Inside center of cabin (2 each horizontal: 1 each vertical).

   c. Instrument console (See Instruments Section 14.000).

   d. Forward cross tube inspection panel.

4.200 WELDED STEEL TUBE FRAME ASSEMBLIES

WARNING

All welded steel tube structures used in the rotorcraft are stress relieved. No weld repairs are permissible outside Robinson Helicopter Co.

1. Frames required on R22 Alpha & Beta Models

   A020-2 Upper Frame Serial Number 0400 and subsequent.

   A046-1 Lower Left Frame

   A046-2 Lower Right Frame

   A046-3 Right-Hand Strut

2. Frames required on R22 Standard & HP Models

   A020-2 Upper Frame

   A020-1 Lower Left Frame

   A020-84 Lower Right Frame

   A020-3 Right-Hand Strut

3. Optional frame on Mariner

   A047-1 Upper Frame with Tie Downs

4.210 Left-Hand Frame Assembly

4.211 Removal

a) Remove main rotor blades per Section 9.111.

b) Remove clutch assembly per Section 7.210.

c) Remove main rotor gearbox per Section 7.110.

d) Remove tailcone assembly per Section 4.311.

e) Remove power plant per Section 6.110.

f) Remove seat backs and center panels per Section 4.144.

g) Disconnect the three lower forward firewall and left-hand upper aft attach points on the left-hand frame.

h) Disconnect the aft NAS1306 landing gear attach bolt from the left-hand landing gear support.

i) Disconnect the two upper left-hand frame attach points at the vertical firewall.

j) Remove the through bolts connecting the upper frame to the fuselage and lower left-hand frame assembly.

k) Remove the left-hand frame.

l) Remove the landing gear support from the left-hand frame assembly.

4.212 Left-Hand Frame Assembly Installation

a) Install the landing gear support bearing.

b) Position left-hand frame for installation.

c) Install the bolt (internal wrenching) connecting the upper frame assembly to the left-hand frame assembly through the horizontal firewall. Torque bolt to 75 ft-lbs. (wet).

4.212 Left-Hand Frame Assembly (cont'd)

d) Install the two NAS1304 bolts on upper support of the left-hand frame to the vertical firewall. Torque to 100 in-lbs. plus nut drag.

e) Install fasteners at firewall forward attachment points. Torque the attaching screws and bolts per Fastener Torques, Section 1.300.

NOTE

Lower support at fuselage has a large-area washer AN 970-4 under bolthead next to tab of frame.

NOTE

The outboard support of the frame requires a washer between the frame and the fuselage skin. (See Fig. 4-1 View H)

f) Install NAS1306 landing gear attach bolt from frame support to landing gear. Torque NAS1306 bolts to 300 in.-lb plus nut drag. Install palnuts.

g) Install upper aft support of the left-hand frame arm. Torque NAS1304 bolt to 100 in-lbs. plus nut drag. Install palnut.

h) Install power plant per Section 6.120.

i) Install tailcone per Section 4.312.

j) Install main rotor gearbox per Section 7.120.

k) Install clutch assembly per Section 7.220.

l) Install main rotor blades per Section 9.112.

m) Install seat backs and panels after verifying all attaching nuts and screws are secure.

4.220 Right-Hand Frame Assembly

4.221 Right-Hand Frame Removal

a) Remove main rotor blades per Section 9.111.

b) Remove clutch assembly per Section 7.210.

c) Remove main rotor gearbox per Section 7.110.

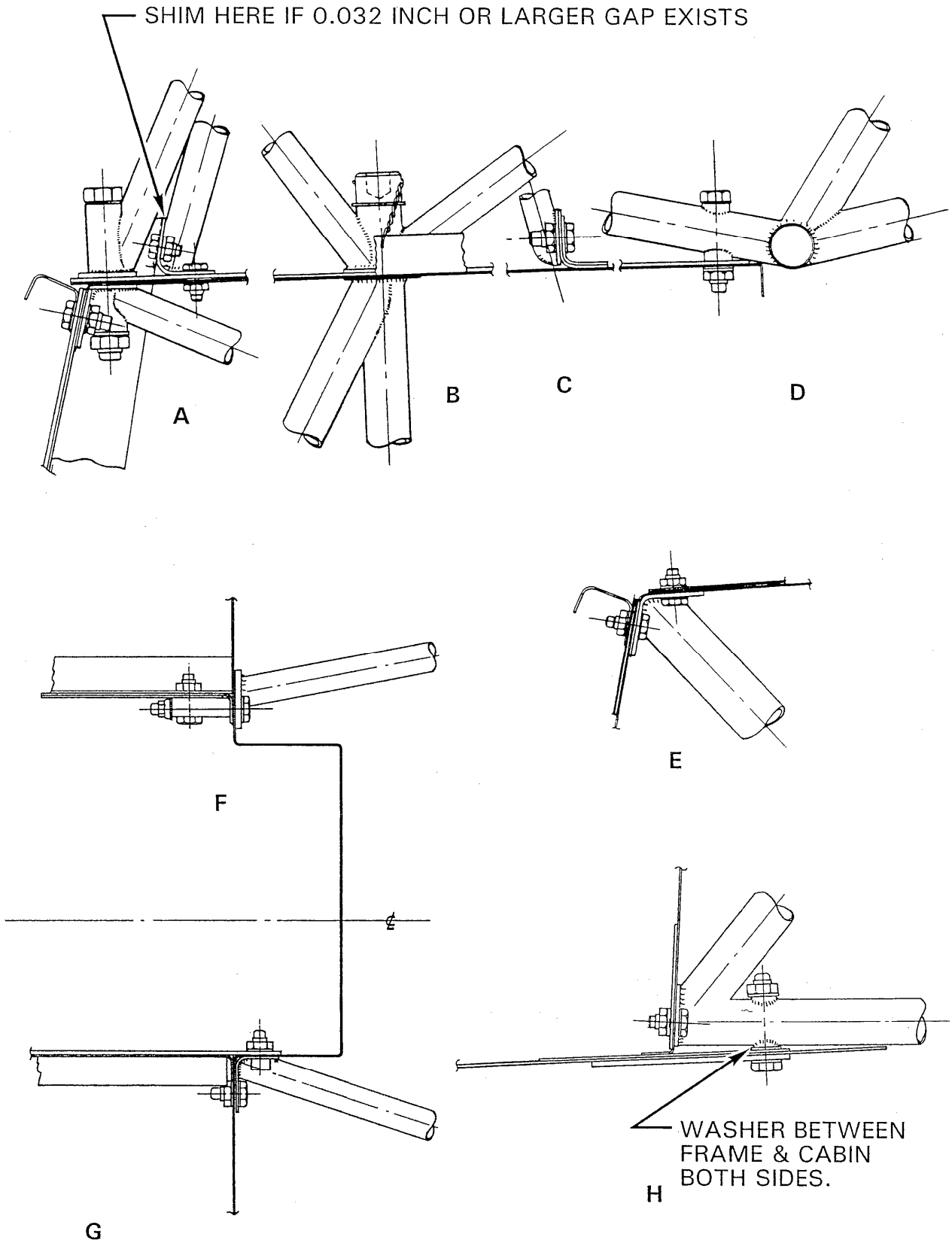

FIGURE 4-1 FRAME-TO-CABIN ATTACHMENTS

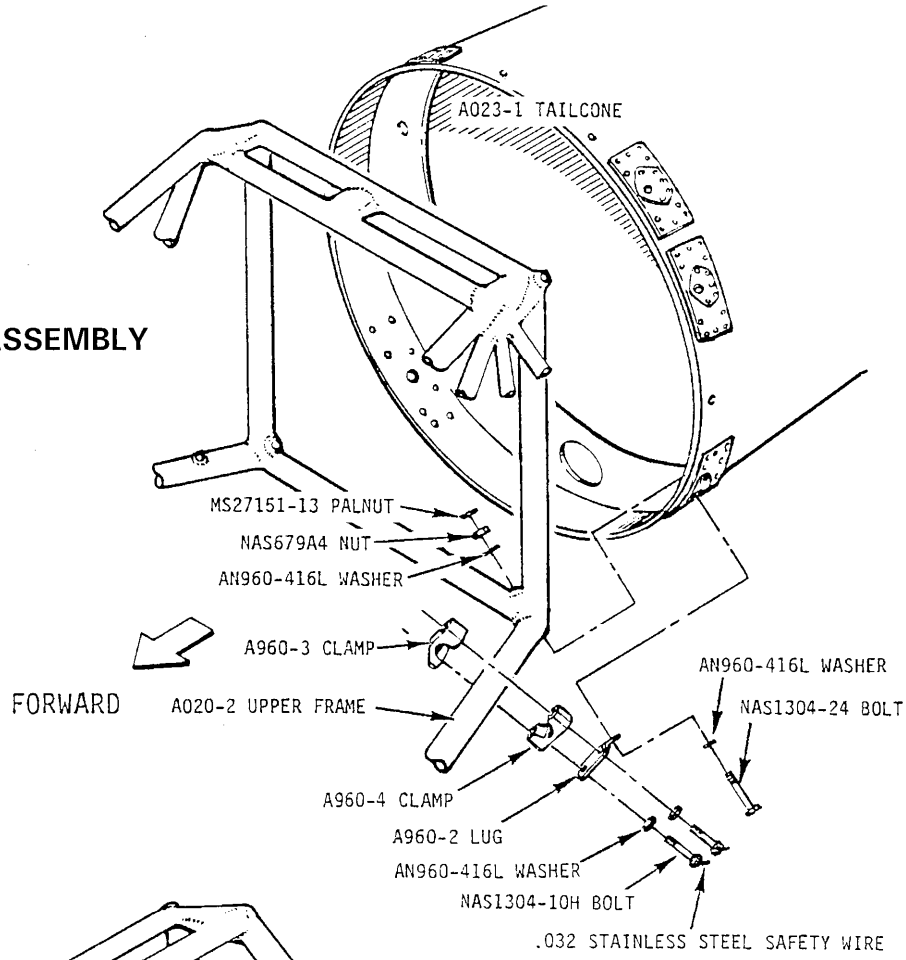

FIGURE 4-1A A960 CLAMP ASSEMBLY

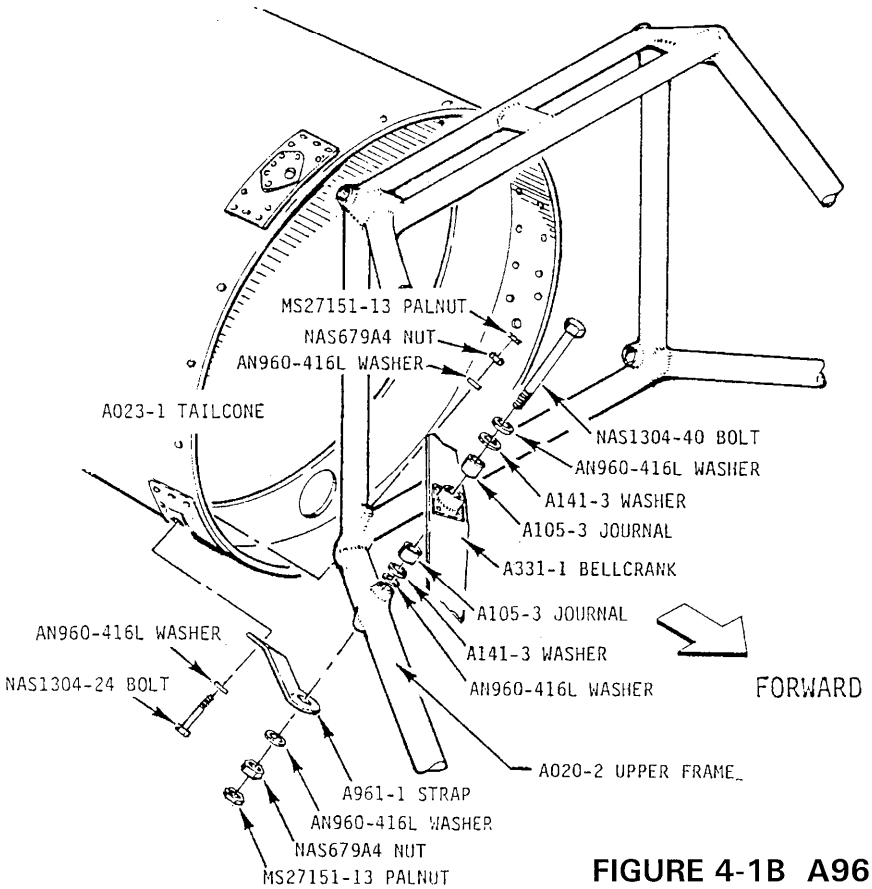

FIGURE 4-1B A961 STRAP ASSEMBLY

4.221 Right-Hand Frame Removal (cont'd)

d) Remove tailcone assembly per Section 4.311.

e) Remove powerplant per Section 6.110.

f) Disconnect aft landing gear attach bolt from right-hand landing gear support.

g) Disconnect four forward firewall attach points.

h) Remove (2) through bolts connecting right side of upper frame to fuselage.

i) Remove right-hand frame from helicopter.

j) Remove landing gear support from right frame assembly.

4.222 Right-Hand Frame Installation

a). Install landing gear support bearing.

b) Position right-hand frame for installation.

c) Install attaching screw (internal wrenching) connecting upper frame assembly to right hand frame assembly through horizontal firewall. Torque screw per Section 1.330.

d) Tighten lower inboard support attaching screws to the vertical firewall.

e) Install fasteners at the forward firewall attachment points. Torque fasteners per Section 1.300.

f) Install landing gear attach bolt from frame support to landing gear.

g) Install powerplant per Section 6.120.

h) Install aft strut assembly between right-hand lower frame and upper frame assemblies. Torque bolts per Section 1.320. Install palnuts.

NOTE
Seal around inner diameter of bolt holes in strut with B270-1 sealant. Verify no sealant on bolt threads.

i) Install tailcone per Section 4.312.

j) Install main rotor gearbox per Section 7.120.

k) Install clutch assembly per Section 7.220.

l) Install main rotor system per Section 9.112.

4.222 Right-Hand Frame Installation (cont'd)

m) Install seat backs and panels after verifying all attaching nuts and screws are secure.

4.230 Upper Frame Assembly

4.231 Upper Frame Removal

Before the upper frame is disconnected and removed, the power plant must be either removed or supported.

> **CAUTION**
>
> Extensive damage to the firewall and lower welded tube structures will occur if power plant is not supported or if support is dislodged.

a) Remove main rotor blades per Section 9.111.

b) Remove clutch assembly per Section 7.210

c) Remove the right and left seat back and center push-pull tube panel assemblies.

d) Remove main rotor gearbox per Section 7.110.

e) Remove tailcone assembly per Section 4.311.

f) Support power plant or remove per Section 6.110.

g) Disconnect right-hand aft vertical strut assembly at upper frame and lower right-hand attach points and remove.

h) Disconnect the forward support at the horizontal and vertical firewall.

> NOTE
>
> If same upper frame is to be reinstalled, any shims found at the forward support should be reinstalled in the same position.

i) Disconnect the two forward through bolts attaching the upper frame to the two lower frames.

j) Disconnect the two (internal wrenching) bolts attaching the upper frame to the two lower frames.

4.231 Upper Frame Removal (cont'd)

k) Disconnect the center upper frame mount point at the horizontal firewall stiffener.

l) Disconnect the aft portion of the upper frame.

m) Remove upper frame.

4.232 Upper Frame Installation

a) Clean upper frame and attach points of all old sealant, grease and oil.

b) Position upper frame for installation.

c) Install internal wrenching bolts with anti-seize. Do not tighten at this time.

d) Install the two NAS1306(NAS6606) forward through bolts.

e) Torque the four attach bolts in c & d above to:

NAS1306(NAS6606)	300 in-lb
NAS1351-8H40P	75 ft-lb (wet)

f) Measure gap on the upper frame. Shim as required (see Fig. 4-1 View A)

g) Install the four attaching bolts in forward support. Do not install washers under the two B238-1 bolt heads in the push-pull tube tunnel. Torque the four bolts to 40 in.-lb plus nut drag (see Fig. 4-1 View A).

h) Install the center support bolts of the upper frame assembly. Torque the two NAS1304(NAS6604) bolts.

i) Connect the upper frame to the aft end of the horizontal firewall.

j) Connect the aft end of the upper frame to the lower frame assembly.

k) Torque the NAS1304(NAS6604) attach bolts.

l) Install the power plant, if removed.

m) Seal firewalls at the upper and lower frame attach points to insure no seepage of fuel in the event of a fuel tank leak. Use Coast Pro-Seal 890B2.

4.232 Upper Frame Installation (cont'd)

n) Install main rotor gearbox per Section 7.120.

o) Install tailcone per Section 4.312.

NOTE
On A020-2 upper frames S/N 0002 thru 0399 without welded tailcone straps require A960-1 clamp assembly and A961-1 strap assembly.

p) Install clutch assembly per Section 7.220

q) Install seat backs and panels after verifying all attaching nuts and screws and secure.

4.240 Strut Assembly Removal and Installation

To remove strut:

a. Remove upper and lower attaching bolts.

b. Remove strut.

To install strut:

a. Line up holes in strut with upper and lower frame tabs. Lower end of strut goes on aft face of lower frame tab.

b. Install NAS6604-3 attaching bolts wet with B270-1 sealant on shanks.

CAUTION
Verify threads are clean and dry.

Torque per Section 1.330. Install palnuts, torque per Section 1.320, and torque stripe.

4.300 TAILCONE AND EMPENNAGE

4.310 Tailcone

4.311 Tailcone Removal

a) Disconnect wiring (antenna, strobe, tail light and chip detector) to tailcone.

b) Mark tail rotor driveshaft and A947-2 flexplate for reinstallation.

c) Disconnect tail rotor driveshaft flange from flex plate leaving flex plate connected to clutch shaft. Install attaching hardware back onto flex plate in the same position from which it was removed.

WARNING

A193 flex plates, which do not have bonded washers, are obsolete and must be replaced with A947 flex plates having bonded washers. If a bonded washer separates from an A947 flex plate, flex plate is unairworthy and cannot be repaired. Ensure A947-1 forward flex plate is Rev E or subsequent (identified by letter "E" or subsequent letter on two adjacent arms of flex plate).

d) Disconnect aft tail rotor push-pull tube from intermediate bellcrank.

e) Remove five NAS1304 bolts that hold tailcone to steel tube structure.

f) Carefully remove tailcone.

4.312 Tailcone Installation

a) Install tailcone onto attaching frame structure. Insure wires on tailcone bulkhead are not pinched between bulkhead and frame.

NOTE

All R22 helicopters with upper frame A020-2 S/N 0002 thru 0399 are required to install A960-1 clamp and A961-1 strap assemblies per RHC Service Bulletin 26.

b) Install the five attaching bolts. Torque nuts per Section 1.320. Install palnuts.

c) Connect the A121-17 aft push-pull tube to the intermediate bellcrank. Torque nut per Section 1.320. Install palnut.

d) Connect tail rotor driveshaft flange to intermediate flexplate. (see Section 7.320).

4.312 Tailcone Installation (cont'd)

WARNING

Shim intermediate flex plate per Section 7.330.

WARNING

A193 flex plates, which do not have bonded washers, are obsolete and must be replaced with A947 flex plates having bonded washers. If a bonded washer separates from an A947 flex plate, then flex plate is unairworthy and cannot be repaired.

Torque NAS1304 attach bolts per Section 1.320 and install palnuts.

e. Connect electrical connections for strobe, antenna, tail light and chip detector.

f. Check for clearance between tailcone and upper frame assembly. Refer to Figure 4-2D.

4.313 Tailcone Replacement

The following step-by-step instruction covers set-up, drilling and installation of doublers to the A023 Tailcone Assembly.

a. Set-up

1. Level helicopter longitudinally and laterally per Section 1.220(c). Shim as necessary under landing gear skid tubes to level helicopter.

2. Verify tailcone part number is correct for helicopter model. Slide forward end of tailcone over upper steel tube frame and support aft end of tailcone with an adjustable stand.

3. Refer to Figure 4-2A. Insert two bolts into horizontal mounting holes in tail rotor gearbox mount casting at aft end of tailcone. Place a bubble level across these bolts and level tailcone horizontally by turning it on the steel tube frame.

4. Refer to Figure 4-2B. Measure from left and right lower frame vertical strut-to-upper steel tube frame attach points to aft end of tailcone; these measurements should be equal on both sides. Center tailcone laterally as required.

4.313 Tailcone Replacement (cont'd)

5. Refer to Figure 4-2C. Fill a clear plastic tube with water to level of forward end of tailcone at lowest point. Extend plastic tube under tail rotor gearbox. Recheck water level.

6. Refer to Figure 4-2C. From level of forward end of tailcone (at lowest point) to horizontal centerline of tail rotor gearbox (horizontal mounting bolts), the distance should be 16.21 ± 0.20 inches. Adjust height of tailcone as required. Use stand to hold tailcone in place.

7. Refer to Figure 4-2D. Place a straight edge across the forward face of tailcone and measure gap between straight edge and forward face of the steel tube mounting structure. Measurements should be taken as close as possible to the four tailcone mounting points. Adjust tailcone as necessary to obtain a minimum dimension of 0.10 inch. Recheck and adjust vertical and lateral centering of tailcone as required.

b) Drilling the Tailcone:

1. Refer to Figure 4-2D. Prior to drilling, verify minimum 0.345 inch edge distance from tailcone edge to hole edge.

2. Clamp tailcone over three of the mounting points to prevent its movement. To prevent oversize holes, back drill (from inside of tailcone) four mounting holes, using a center drill with a 0.250 inch diameter shank, then use a 0.250 inch diameter twist drill. After drilling each hole, secure tailcone to frame with appropriate fasteners to prevent tailcone movement.

3. Match drill middle left-hand side tailcone mount from outside using frame tab as drill guide. Protect steel tube structure inside tailcone from drill bit with a piece of scrap sheet metal.

4. Deburr drilled holes in tailcone. Refer to Figure 4-2E and accompanying "CAUTION" statement. Center B288-1 or -2 doublers over each tailcone mounting hole and flush with tailcone forward edge. Mark doublers from inside tailcone for drilling 0.250 inch diameter hole.

5. Refer to Figure 4-2E. Drill B288-1 or -2 doubler with a 0.250 inch diameter twist drill at spot marked in step 4. Deburr hole and secure doubler to tailcone with a NAS1304-3 bolt. Drill through existing pilot holes in doubler with a #30 drill bit and secure with clecos.

6. Refer to Figure 4-2E and its accompaying "CAUTION" statement. Remove NAS1304-3 bolts. Place B288-3 doubler on top of B288-1 or -2 and flush with tailcone forward edge. Mark B288-3 doubler from inside tailcone for drilling 0.250 inch diameter hole. Drill B288-3 doubler with 0.250 inch diameter twist drill and deburr. Install B288-3 doubler atop B288-1 or -2 doubler and secure with NAS1304-3 bolt. Drill through existing pilot holes with a #30 drill bit.

4.313 Tailcone Replacement (cont'd)

7. Remove doublers and deburr. Install doublers with clecos then rivet with MS20470AD4 rivets trimmed to proper grip length.

8. Prime doubler installation with zinc chromate or epoxy primer then paint to match tailcone.

9. Install tailcone per Section 4.312.

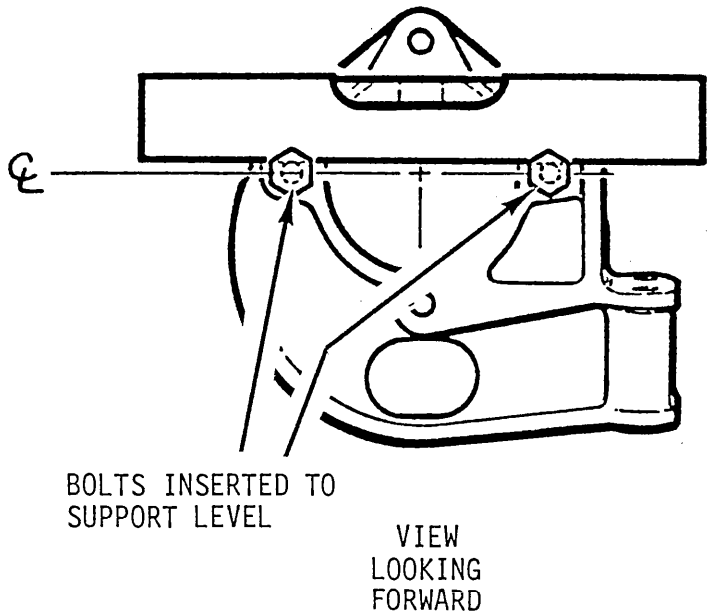

FIGURE 4-2A TAILCONE LATERAL LEVELING

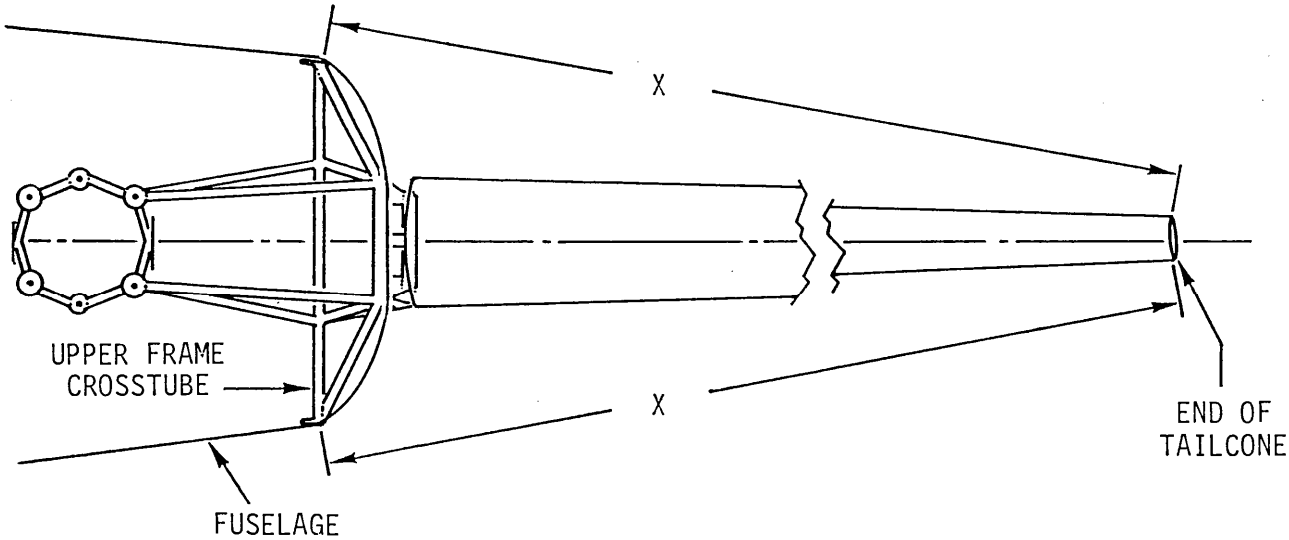

FIGURE 4-2B LATERAL TAILCONE CENTERING

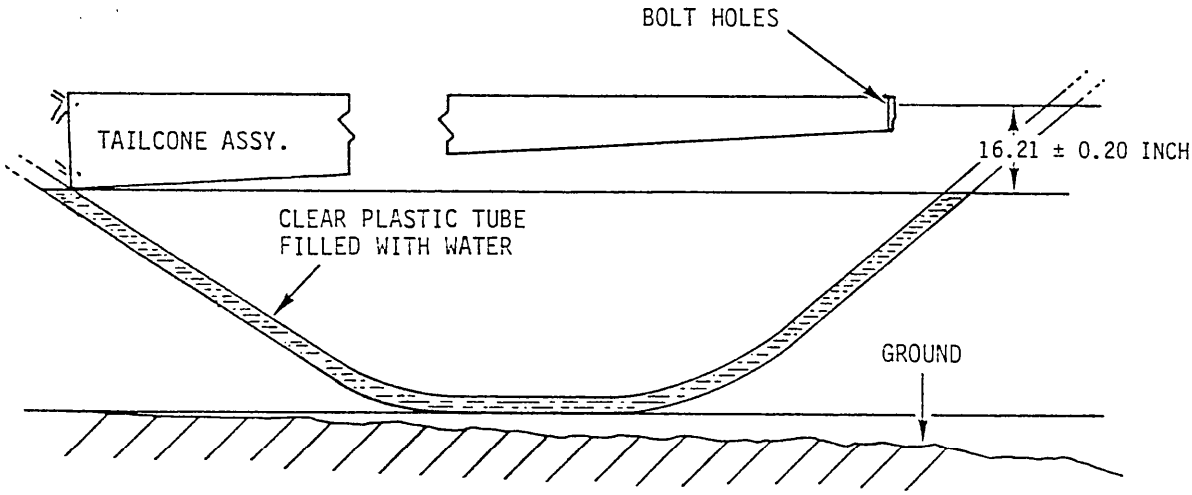

FIGURE 4-2C HORIZONTAL LEVELING

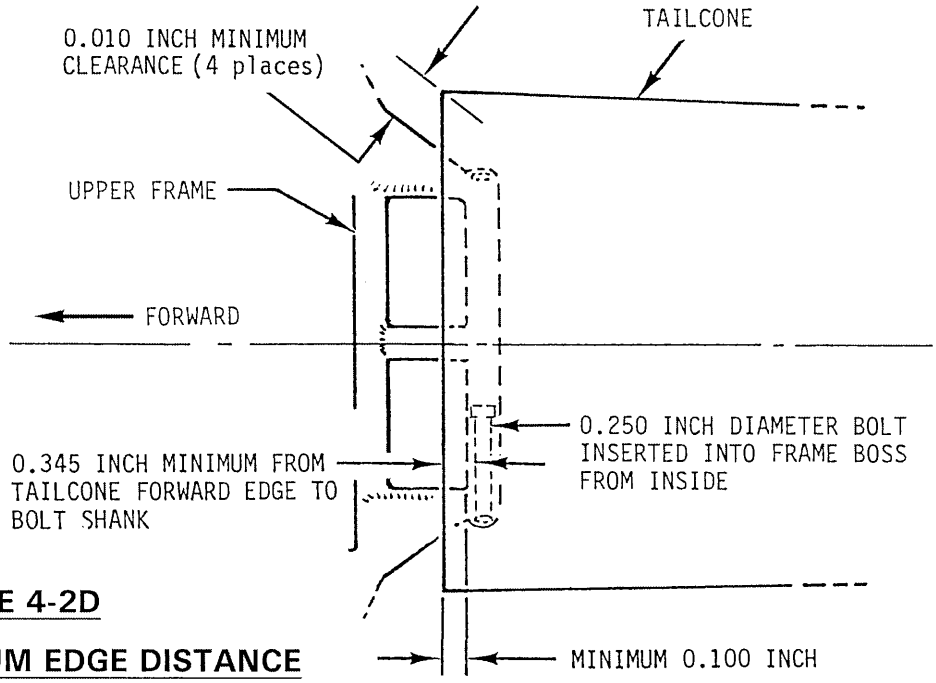

FIGURE 4-2D

VERIFYING MINIMUM EDGE DISTANCE

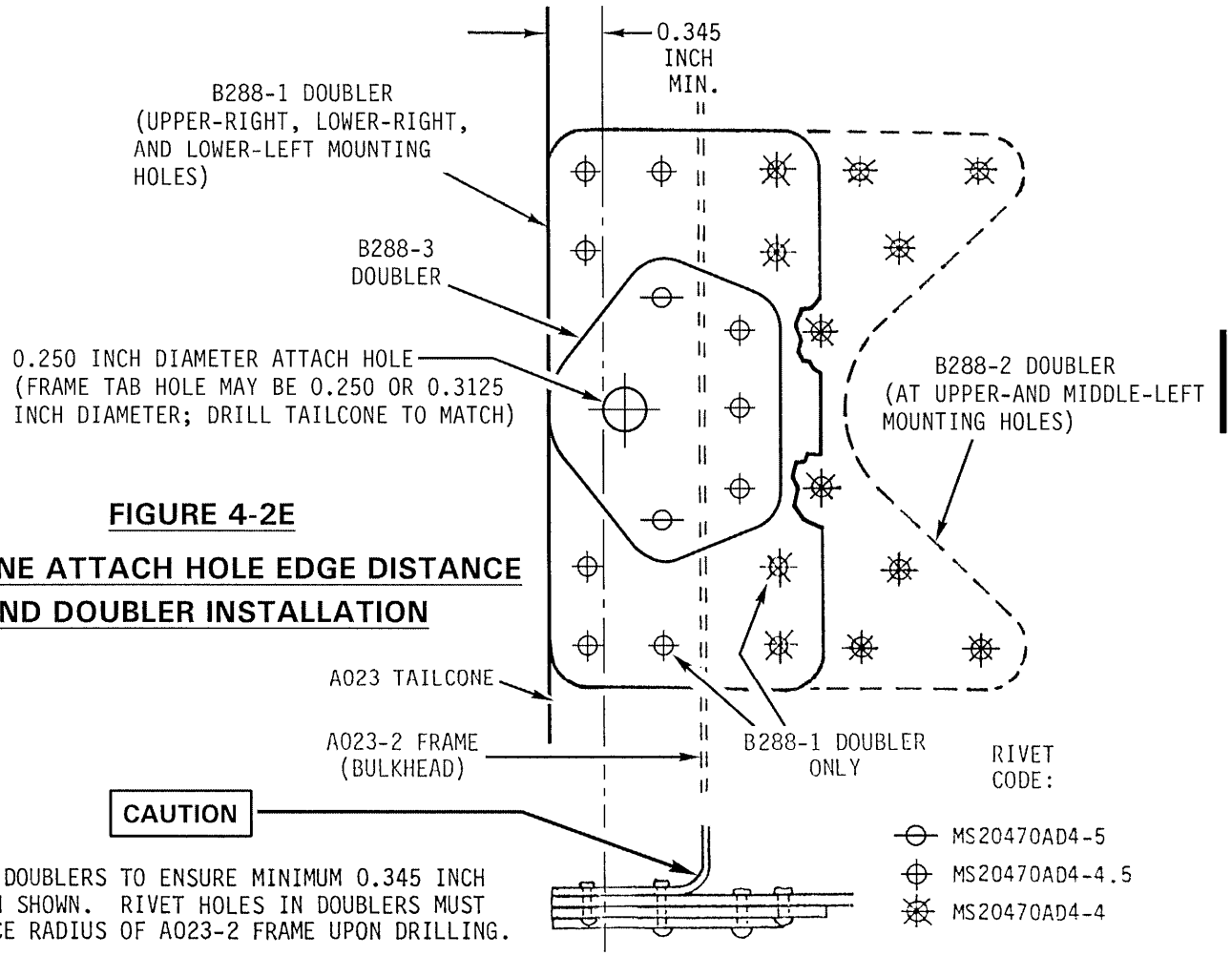

FIGURE 4-2E

TAILCONE ATTACH HOLE EDGE DISTANCE AND DOUBLER INSTALLATION

CAUTION

POSITION DOUBLERS TO ENSURE MINIMUM 0.345 INCH DIMENSION SHOWN. RIVET HOLES IN DOUBLERS MUST NOT PIERCE RADIUS OF A023-2 FRAME UPON DRILLING.

4.314 Tailcone Repair - (Permissible in Bay 5 only)

1. Dent Bay 5 only - 0.100 inch to 0.250 inch deep 0.060 inch or greater radius, not to exceed 5 inches long.

Above described dents may be repaired with 0.032 inch or 0.040 inch thick doubler of same material using rivets as follows:

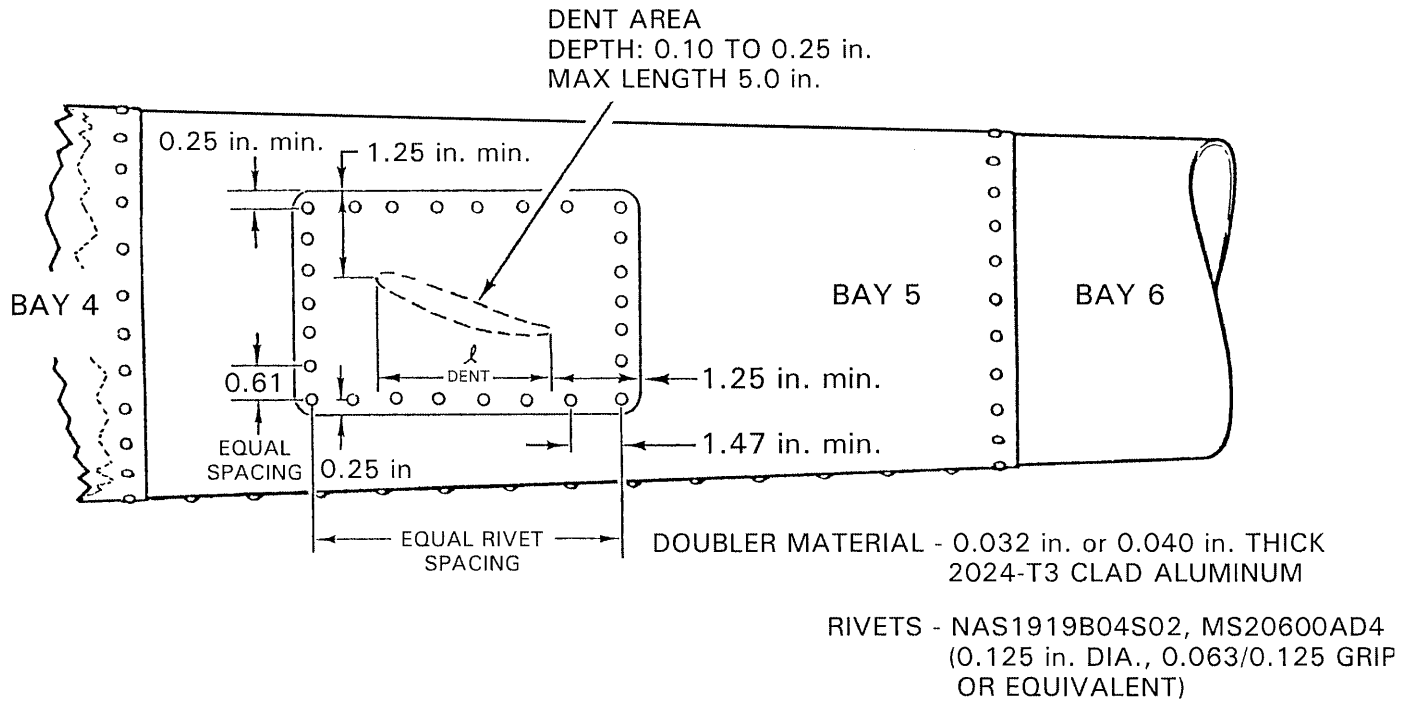

FIGURE 4-2F TAILCONE REPAIR LIMIT
(approved for Bay 5 only)

4.320 Empennage Assembly

4.321 Empennage Removal

1. Disconnect the navigation light wire at the quick disconnect.

2. Remove two attach bolts at tailcone casting and remove empennage assembly.

4.322 Empennage Installation

a) Install empennage assembly onto bulkhead fitting.

b) Install NAS1304 bolts and torque to 100 in-lbs. plus nut drag. Install palnuts and torque stripe.

4.323 Upper Stabilizer Replacement

a) Drill out the one rivet on the upper stabilizer attaching clip. Some ships use a #6 screw.

b) Remove (4) upper stabilizer attaching bolts.

c) Remove upper stabilizer.

d) Install new upper stabilizer to the horizontal stabilizer. Slight trimming of the upper stabilizer may be necessary on installation to avoid contact between stabilizer skins.

NOTE

If stabilizer is trimmed, a minimum edge distance of .140" to the 3/32 D. rivets must be maintained.

e) Mark and drill the aft clip hole in the upper stabilizer using a #30 drill bit for rivet or #27 drill bit for #6 screw.

f) Attach upper stabilizer to aft clip using 1/8 D. rivet or #6 screw, washer, and nut.

g) Torque the four (4) attach bolts to 60 in-lbs. plus nut drag. Torque stripe attach bolts on stabilizer.

4.324 Lower Stabilizer Replacement

Follow procedure called out for the upper stabilizer replacement in Section 4.323.

NOTE

No contact permitted between stabilizer skins.

Torque attach bolts to 60 in-lbs.

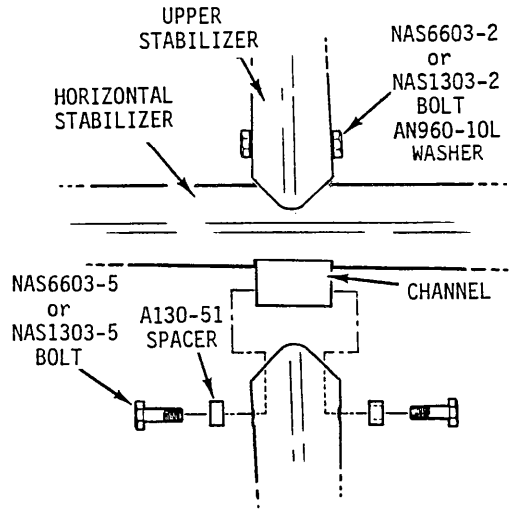

FIGURE 4-3 STABILIZER INSTALLATION

4.325 Horizontal Stabilizer Replacement

a) If prop protractor is used, helicopter will not have to be leveled. If just a simple level is to be used, the helicopter will need to be leveled laterally and longitudinally per Section 1.210.

b) Install empennage assembly onto bulkhead fitting.

c) Zero prop protractor or an accurate level on M.R. hub.

d) Using MT068 special tool along with a prop protractor or level, check for correct angle of incidence required by NOTE below:

NOTE

R22 Standard, HP, & Mariner
Horizontal stabilizer angle of incidence with ship leveled, to be 1.8° to 2.3° nose up and requires A023-1 tailcone.

R22 Alpha & Beta

Horizontal stabilizer angle of incidence, with ship leveled, to be 2.8° to 3.3° nose down and requires A023-20 tailcone.

e) Verify horizontal stabilizer trailing edge level within ½ degree.

f) Insert .250" bolt into the forward attach hole.

NOTE

Top holes of horizontal stabilizer attach point are are predrilled. Bottom holes are drilled on installation after setting angle of incidence and stabilizer trailing edge is level.

g) Push forward or pull aft slightly on the tail skid to achieve the angle of incidence per note above.

h) While holding the stabilizer at the correct angle of incidence, drill through the aft attach hole and the lower horizontal stabilizer skin using .250 (¼) inch drill bit.

i) Install the aft bolt and torque to 100 in-lbs. plus nut drag.

j) Remove the forward bolt. Check the angle of incidence and trailing edge level again per step d and e. Drill the forward attach hole.

k) Remove the stabilizer and deburr the holes. Reinstall the stabilizer, torque the bolts to 100 in-lbs. plus nut drag. install palnut.

1. Level A/C laterally and longitudinally at the M.R. hub if using simple level (See Section 1.210).

2. Horizontal stabilizer to be level at trailing edge within ½ degree.

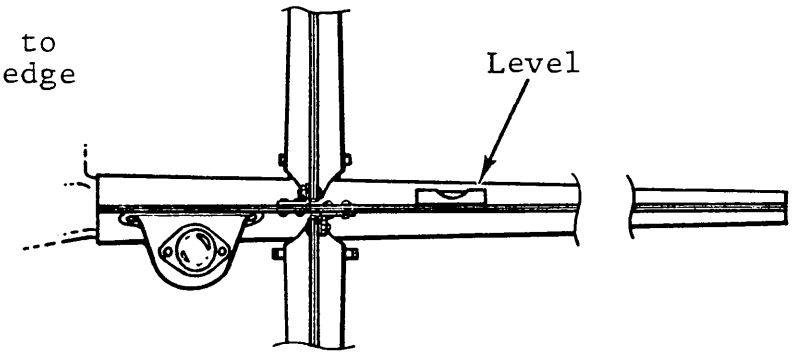

3. Horizontal stabilizer angle of incidence:

   1.8 - 2.3 degrees nose up
   (R22 Standard, HP, & Mariner)

   2.8 - 3.3 degrees nose down
   (R22 Alpha & Beta)

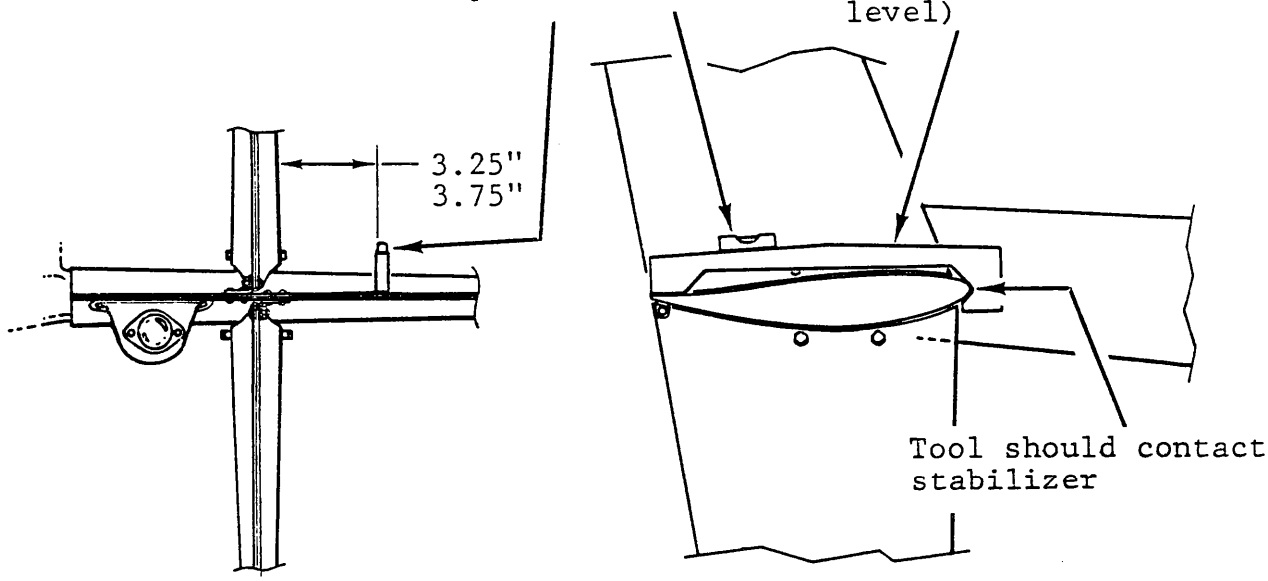

CHAPTER 5

LANDING GEAR

Section	Title	Page
5.000	Landing Gear	5.1
5.001	Introduction	5.1
5.002	Description	5.1
5.100	Landing Gear Assembly	5.1
5.110	Landing Gear Removal	5.1
5.120	Landing Gear Installation	5.3
5.200	Cross Tubes	5.3
5.210	Cross Tube Removal	5.3
5.220	Cross Tube Installation	5.6
5.300	Skid Tubes	5.6
5.310	Skid Tube Removal	5.6
5.320	Skid Tube Installation	5.6
5.330	Skid Shoe Removal and Replacement	5.6
5.340	Ground Handling Wheel Support Removal and Replacement	5.8
5.400	Preventive Maintenance	5.8
5.500	Float Ship Landing Gear	5.9
5.510	Float Landing Gear Removal	5.9
5.520	Float Landing Gear Installation	5.10
5.530	Float Tube Removal	5.11
5.540	Float Tube Installation	5.11
5.550	Float Tube Repair	5.13

Intentionally Blank

CHAPTER 5

LANDING GEAR

5.000 Landing Gear

5.001 Introduction

This section covers removal and reinstallation of the landing gear assembly, cross tubes, skid tubes, skid shoes, and ground handling wheel supports.

5.002 Description

A skid-type landing gear is used. Most hard landings will be absorbed elastically. However, in an extremely hard landing, the struts will hinge up and outward as the crosstube yields (becomes permanently bent) to absorb the impact. Slight crosstube yielding is acceptable. However, yielding which allows the tail skid to be within 34 inches (24 inches for R22 Standard or HP) of the ground when the helicopter is sitting empty on level pavement requires crosstube replacement.

Abrasion-resistant wear shoes are mounted on the bottom of the skids. These shoes should be inspected periodically, particularly if autorotation landings with ground contact have been performed. Have skid shoes replaced whenever the thinnest point in the wear area is less than 0.06 inches (1.5 mm).

R22 Mariners have permanently inflated utility floats mounted to skid tubes and incorporate aft skid extensions to support the floats.

5.100 Landing Gear Assembly

5.110 Landing Gear Removal

1. Remove forward cross tube cover.
2. Two methods may be used to hoist or jack helicopter for gear removal:
   a. Place a foam-covered contour block under the vertical firewall (see Figure 5-1). Install skid stand under tail. Using a jack under each end of contour block, raise helicopter until skids clear ground by approximately 4 inches.

   CAUTION

   Contour block must be directly under vertical firewall to support weight of the helicopter.

   b. Hoist helicopter by main rotor hub per § 1.210 until skids clear ground by approximately 4 inches.
3. Disconnect A936 ground wire at aft-right elbow.
4. Remove four landing gear attach bolts. Slide landing gear clear of helicopter.

NOTE

When using method 2a, remove one skid tube to move landing gear clear of helicopter.

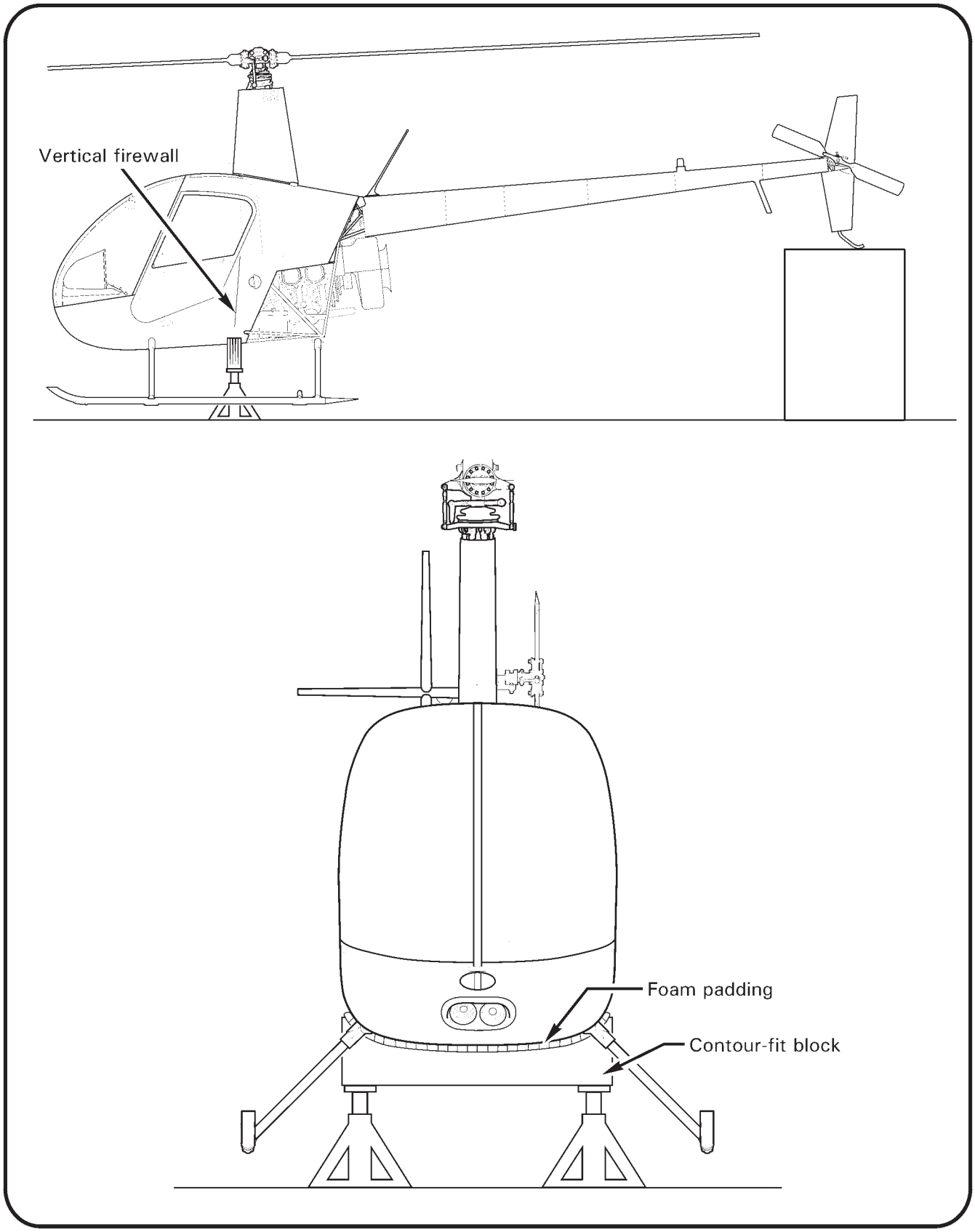

FIGURE 5-1 JACKING

5.120 Landing Gear Installation

1. Jack or hoist helicopter per Section 5.110.2.

2. Lift landing gear one side at a time, install mounting bolts, and torque per Section 1.320.

> NOTE
>
> All mounting bolts are installed from aft side. Ensure large-diameter washers are installed on both sides of strut elbows.

3. Attach ground wire to aft-right elbow lower bolt, torque per Section 1.320, and torque stripe per Figure 2-1.

4. Install palnuts, torque per Section 1.320, and torque stripe per Figure 2-1.

5.200 CROSS TUBES

5.210 Cross Tube Removal

Replace cross tube(s) if yielding results in tail skid-to-level ground dimension of less than 24 inches for a Standard or HP, 34 inches for an Alpha/Beta/Beta II, or 37 inches for a Mariner/Mariner II with float stabilizer installed (see Figures 1-1, 1-1A, & 1-1B).

> NOTE
>
> See Section 2.550 for hard landing inspection criteria.

1. Remove landing gear per Section 5.110.

2. Using a soft brass or aluminum drift, carefully tap out spacers securing cross tube in strut elbow and tap elbows off cross tube.

3. If difficulty is encountered removing strut elbow from cross tube:

   a. Install spacer securing opposite strut elbow to cross tube.

   b. Disconnect stuck strut assembly from skid tube.

   c. Place a rigid support under cross tube.

   d. Using strut on stuck elbow as handle, rotate elbow on cross tube to break paint bond.

   e. Remove spacer installed in Step a. and remove cross tube.

NUMBER	DESCRIPTION
1	Washer
2	Washer
3	Journal
4	Bearing
5	Shackle Assembly - Right Forward
6	Washer
7	Washer
8	Bolt
9	Palnut
10	Nut
11	Washer
12	Spacer
13	Cross Tube
14	Strut Assembly
15	Rain Cap
16	Support Assembly - Aft
17	Support Assembly - Left Forward
18	Washer
19	Bolt
20	Washer
21	Bolt
22	Nut
23	Bolt
24	Nut
25	Washer
26	Washer

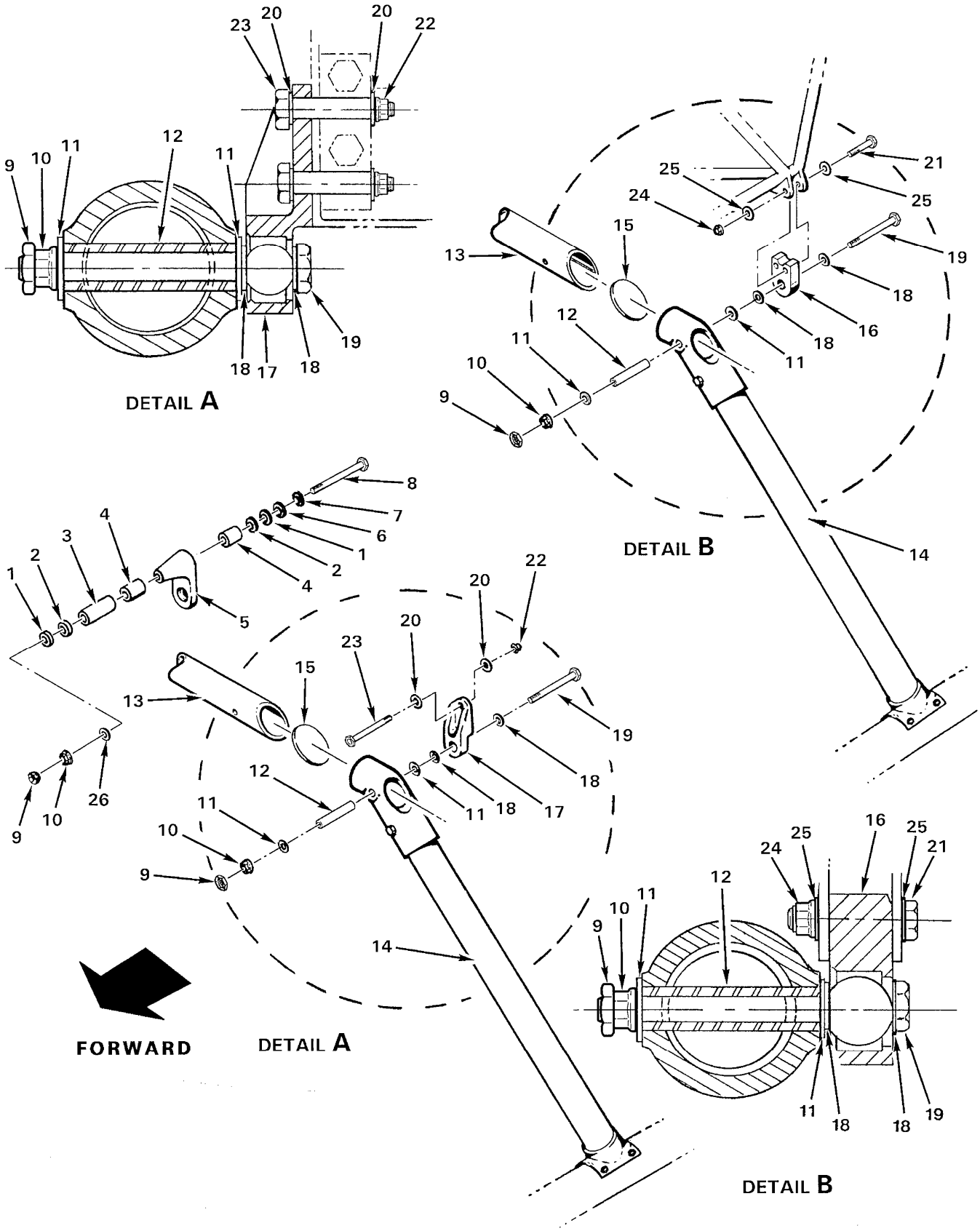

FIGURE 5-2 LANDING GEAR AND CROSS TUBE REMOVAL

5.220 Cross Tube Installation

1. Install cross tube in upper strut elbow. Place a wooden block against end of cross tube and tap as necessary to align mounting hole in cross tube with hole in elbow.

2. Install spacers by tapping them through elbows and cross tubes with a soft face hammer.

5.300 SKID TUBES

5.310 Skid Tube Removal

Replace skid tubes worn beyond 0.030-inch maximum depth (no length limit) longitudinal scratch, 0.030-inch maximum depth and 0.50-inch maximum length circumferential scratch, or 0.50-inch maximum width flat spot.

1. Raise one side of helicopter by jacking under one end of the aft cross tube, one inch inboard of fitting.

2. Remove 4 bolts at each landing gear strut. Remove skid tube.

5.320 Skid Tube Installation

Place skid tube under fore and aft gear struts and install attach bolts. Torque attach bolts per Section 1.320 (self-locking nutplate installed inside skid tube).

5.330 Skid Shoe Removal and Replacement

> NOTE
>
> Replace A667-5 and -6 skid shoes less than 0.050 inch thick.

1. Install ground handling wheels.

2. Push down on tail and place a wooden block approximately 4 inches ahead of intermediate skid shoes. (See Figure 5-3)

3. Remove bolts attaching forward and intermediate shoes to skids. Discard worn shoes and screws.

4. Install new skid shoes and screws. Torque screws per Section 1.320.

> NOTE
>
> Some early R22's had forward skid shoes attached using aluminum blind rivets (MS20600AD6-4). These can be removed by drilling off head and punching out shank.

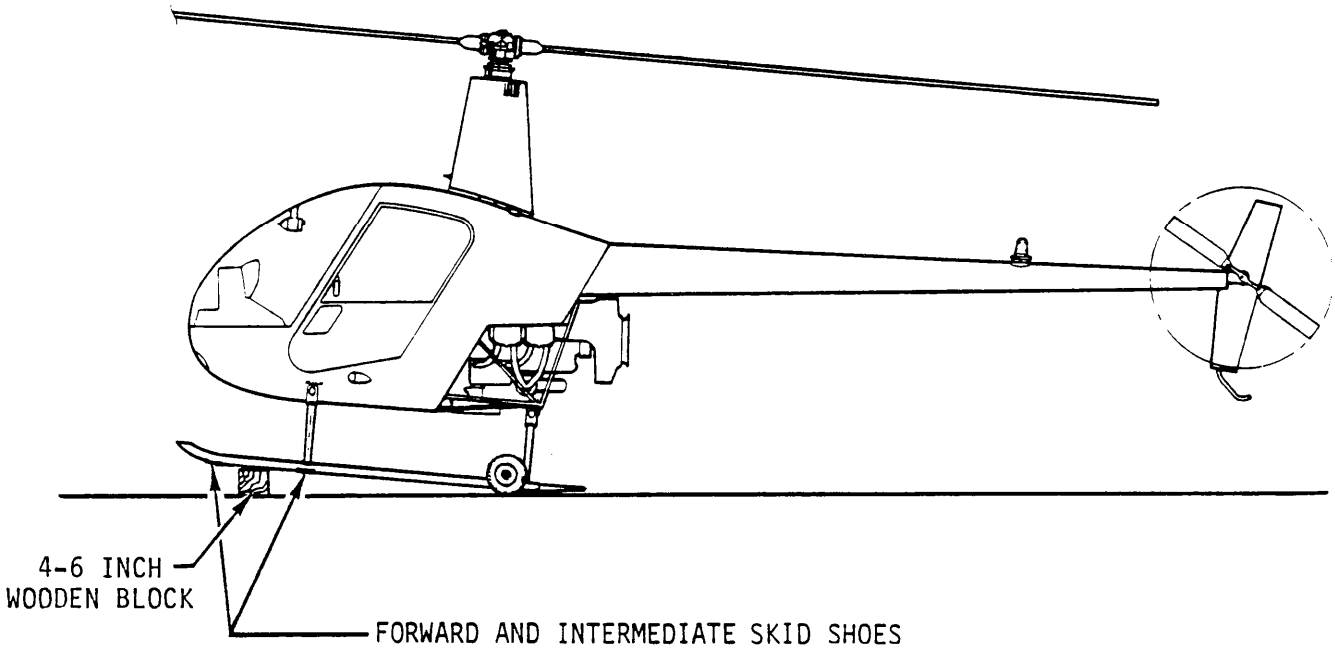

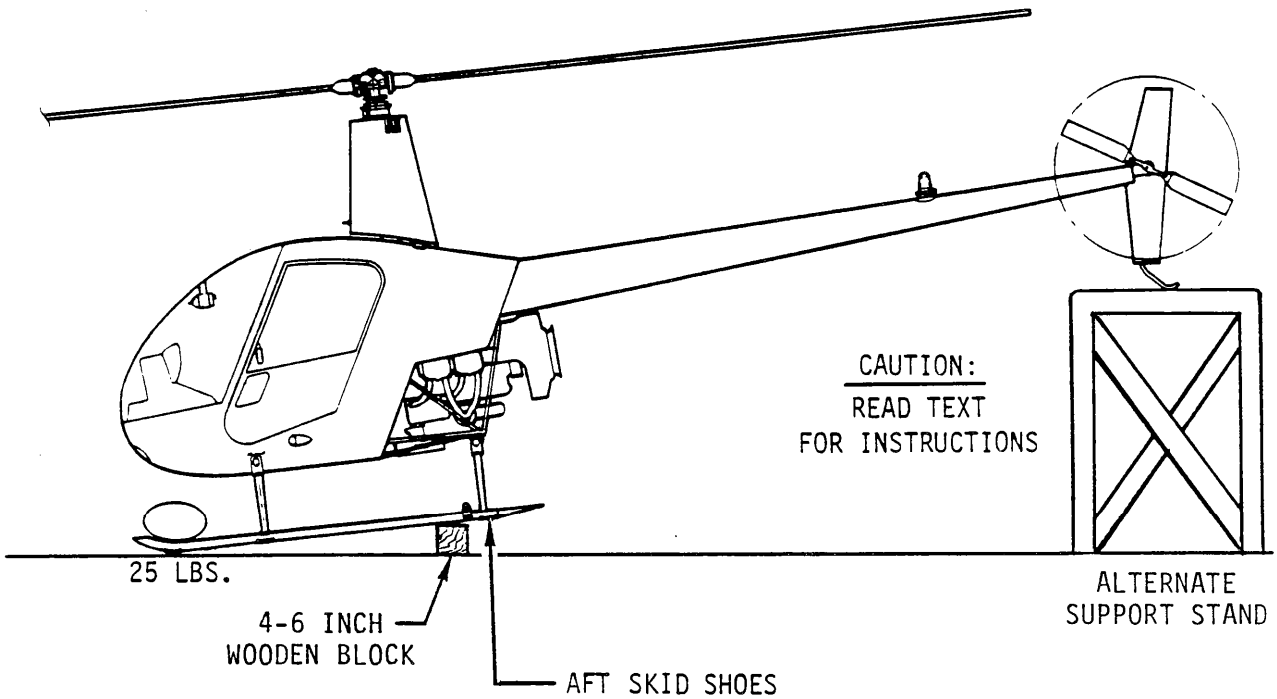

FIGURE 5-3 SKID SHOE REPLACEMENT

5.330 Removal and Replacement of Skid Shoes (cont'd)

e) Tilt the helicopter until the tail skid touches the ground. Place a 4-6 inch wooden block as far aft as possible under each skid tube. (See Figure 5-3).

f) Press down on each skid tip or lift on the tailcone until the helicopter tips forward. Ballast each skid at the tip with approximately 25 pounds, or place a support under the tail skid.

g) Remove and replace the skid shoes per Steps c) and d) above.

5.340 Removal and Replacement of Ground Handling Wheel Support

a) Remove the two attach bolts and pull the support free of the skid.

b) Align the mounting holes of the support with the holes in skid tube. Install the mounting bolts and torque to 50 in.-lb plus nut drag.

5.400 PREVENTIVE MAINTENANCE

1. Ensure drain holes in bottoms of skid tubes are not plugged (two per skid), located just aft of forward two skid shoes.

2. Touch up skid tubes, cross tubes and struts to prevent corrosion. Use paints and primers obtained from approved materials list per Section 1.400.

3. Daily or preflight inspection of skid shoes (Rotorcraft heavy usage).

4. Install lost or loose raincaps with structural adhesive per the manufacturer's instructions. (See approved materials list, Section 1.400).

5.500 FLOAT SHIP LANDING GEAR

The Robinson R22 Mariner Helicopter may be flown with or without the float landing gear installed. If the floats are to be removed from the helicopter, it is necessary for a complete standard landing gear to be installed. Do not remove the float tubes from the landing gear skid tubes.

> **CAUTION**
>
> Float landing gear can only be installed on R22 Mariner helicopters. Mariner helicopters have a "M" suffix after the helicopter serial number stamped on the aircraft data plate.

5.510 Float Landing Gear Removal

a) Remove the complete float landing gear. Refer to Section 5.110 for landing gear removal.

b) Install a complete standard landing gear. Refer to 5.120 for landing gear installation.

c) Remove the float stabilizer on the lower vertical fin of the empennage. Install the standard skid tube and torque the bolts to 30 inch-pounds.

d) Calculate the Weight and Balance using the following information and enter it into the aircraft records.

Part No.	Description	Weight (lb)	CG Arm (in)	Moment (in-lb)
A034-1	Landing Gear with Floats	+62.9	94.6	+5950
A014-1	Landing Gear without Floats	-32.5	85.5	-2779
A970 & A971	Float Stabilizer on Lower Tail Fin	+ 0.6	270	+ 162
A470-1	Standard Tail Skid	- 0.2	272.5	- 54

5.510 Float Landing Gear Removal (cont'd)

e) Review the flight limitations of the R22 Mariner without floats installed in the Mariner Supplement 9-4 of the Pilot's Operating Handbook.

f) Complete a Pre-flight Inspection and Run-up per the Pilot's Operating Handbook.

g) Complete a Flight Check per Section 2.220.

h) Check and adjust the autorotation RPM per Section 10.250 (It will usually require lengthening the pitch links approximately ½ to 1 full turn).

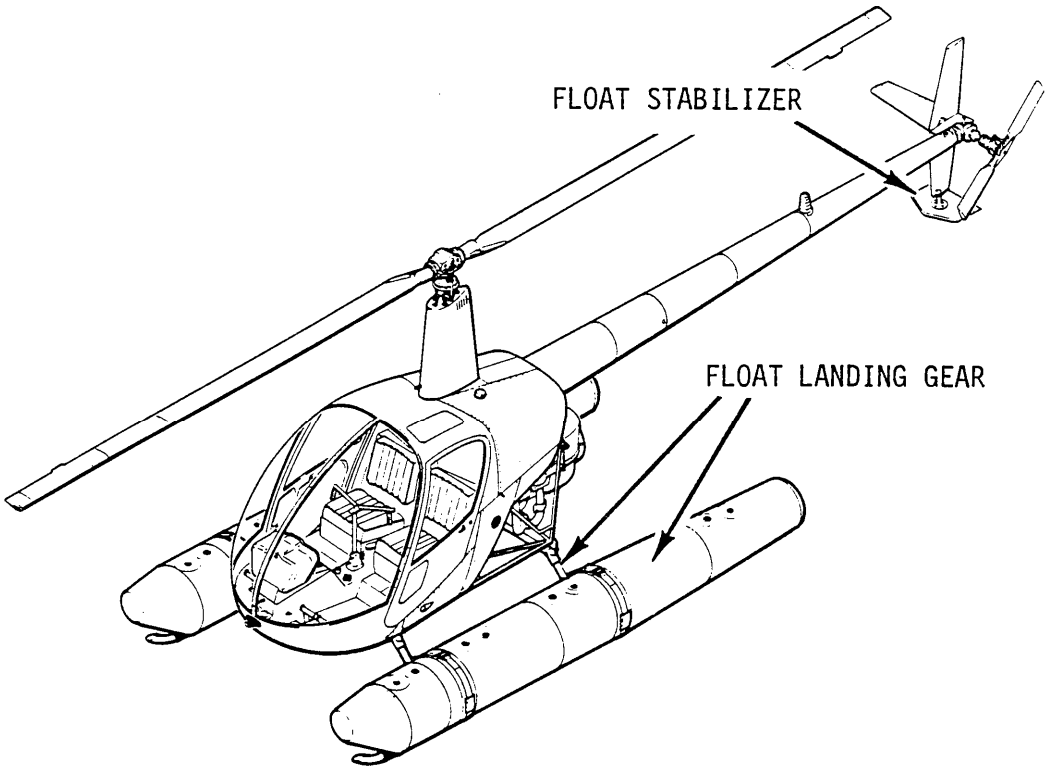

5.520 Float Gear Installation

a) Remove the standard landing gear. Refer to Section 5.110 for landing gear removal.

b) Install the complete float landing gear with float tubes attached to the skid tubes. Refer to Section 5.120 for landing gear installation. Use existing landing gear hardware to install the float landing gear except for the palnuts which must be replaced.

c) Remove the lower vertical fin skid tube on the emmpenage.

5.520 Float Gear Installation (cont'd)

d) Install the float stabilizer in place of the skid tube and torque the bolts to 30 in-lbs.

e) Calculate the new helicopter Weight and Balance using the information given above and enter the change into the aircraft records.

f) Check and adjust the autorotation RPM per Section 10.250 (It will usually require shortening the pitch links approximately ½ to 1 full turn).

g) For float pressure information See Pilot's Operating Handbook Mariner Supplement page 9-4 Section 2.

5.530 Float Tube Removal

a) Untie and remove the lacings at each landing gear strut. Unbuckle the restraint belts.

b) Remove the bolts and nuts that attach the float tube to the skid tube and skid extension.

NOTE

The bolts and nuts are sealed in place and may be difficult to remove.

c) Remove the retainer strips from the girts. Carefully separate the girt from the skid tube extension.

NOTE

Sealant is installed between the girt and the skid tube at each bolt hole.

5.540 Float Tube Installation

NOTE

Remove the old sealant from the skid tube, float tubes and reusable hardware before installation of the float tubes.

a) Position the float tube over the landing gear skid tube and extension. Align the holes in the girt of the float tube and the skid tube.

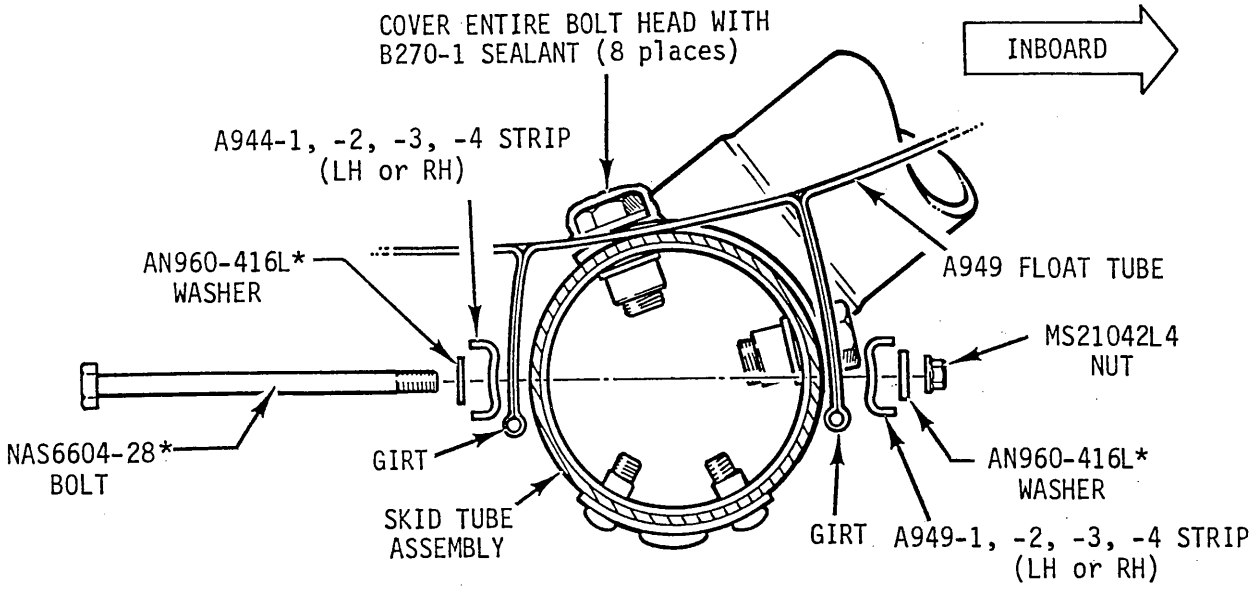

*BOLT LENGTH AND/OR WASHER THICKNESS MAY BE VARIED AS REQUIRED TO MAINTAIN 2-4 THREADS SHOWING BEYOND NUTS. SEAL UNDER HEAD AND NUT AND AROUND BOLT BETWEEN GIRTS AND SKID TUBE WITH B270-1 SEALANT.

FIGURE 5-4 FLOAT TUBE ATTACHMENT

(LEFT SIDE SHOWN, VIEW LOOKING FORWARD)

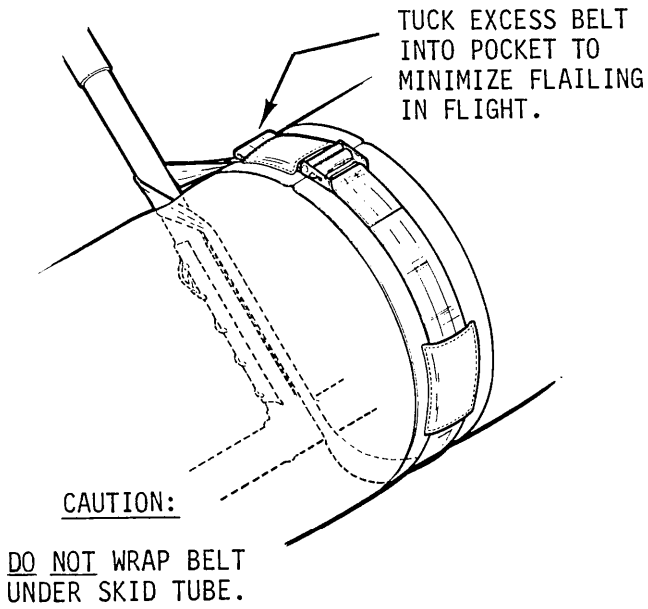

FIGURE 5-5 RESTRAINT BELT INSTALLATION

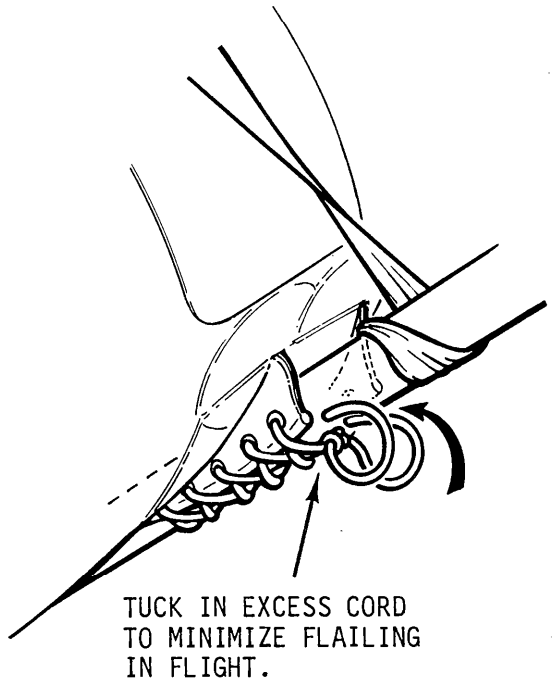

FIGURE 5-6 LACING INSTALLATION

5.540 Float Tube Installation (cont'd)

b) Place the retainer strips in their proper positions. Temporarily install NAS6604-32 or NAS1304-32 bolts to hold the retainer strips and girts in place.

c) Complete one girt section at a time. Using 890-B2 sealant, thoroughly seal all around the bolt holes between the girt and skid tube.

d) Install the correct length bolts in their proper positions and seal under the bolt heads and nuts. Torque all the NAS6604 or NAS1304 bolt to 100 inch-pounds plus nut drag.

e) After completing one girt section, move on to the next one and repeat the process. Prime all exposed bolts and nuts then paint black.

f) Lace the float tube to the landing gear strut using a crossing pattern. Slide the restraint straps through the outside pockets. Wrap the restraint belt under the float tube making sure it passes over the skid tube. Make one wrap around the landing gear strut. Slide the strap through the pocket and into the buckle. Pull tight and tuck the excess strap material into the pocket.

g) Slowly inflate the float tube to its proper operating pressure.

CAUTION

When inflating chambers individually (without the use of a manifold), increase pressure in each chamber in .5 psig increments.

5.550 Float Tube Repair

For float repair procedures refer to instructions included with the Float Repair Kit.

CHAPTER 6

POWERPLANT

Section	Title	Page
6.000	Powerplant And Related Systems	6.1
6.001	Introduction	6.1
6.002	Description	6.1
6.100	Powerplant	6.2
6.110	Engine Removal	6.2
6.120	Engine Installation	6.2
6.130	Engine Shimming	6.6
6.200	Cooling System	6.9
6.210	Fanwheel Removal	6.9
6.220	Fanwheel Installation	6.12
6.230	(Reserved)	
6.240	Balancing Fanwheel	6.13
6.250	Cooling Scroll Replacement	6.16A
6.300	Lubrication System	6.18
6.310	Oil Cooler Removal	6.18
6.320	Oil Cooler Installation	6.18
6.400	Induction System	6.18
6.410	Carburetor Removal	6.18
6.420	Air Box Removal	6.19
6.430	Air Box Installation	6.19
6.435	Air Filter Cleaning	6.21
6.440	Carburetor Installation	6.21
6.450	Carburetor Heat Scoop Removal	6.22
6.460	Carburetor Heat Scoop Installation	6.22
6.500	Exhaust System	6.22
6.510	Exhaust System Removal	6.22
6.520	Exhaust System Installation	6.22
6.600	Troubleshooting	6.23
6.610	Low-Power Checklist	6.23
6.700	Throttle Control And Carburetor Heat Assist	6.25
6.710	Overtravel Spring	6.25
6.711	Overtravel Spring Removal	6.25
6.712	Overtravel Spring Installation	6.25
6.720	(Reserved)	

CHAPTER 6

POWERPLANT (Continued)

Section	Title	Page
6.730	Throttle Push-Pull Tube Assembly	6.26
6.731	Throttle Push-Pull Tube Assembly Removal	6.26
6.732	Throttle Push-Pull Tube Assembly Installation	6.26
6.740	Carburetor Heat Assist	6.26
6.741	Carburetor Heat Control Cable Removal	6.26
6.742	Carburetor Heat Control Cable Installation	6.27
6.743	D334-5 Carburetor Heat Assist Bellcrank Removal	6.27
6.744	D334-5 Carburetor Heat Assist Bellcrank Installation	6.27
6.745	D334-5 Bellcrank Friction Adjustment	6.29

CHAPTER 6

POWERPLANT

6.000 Powerplant and Related Systems

6.001 Introduction

This section includes instructions for removal and installation of engine and support systems. Support systems include induction, cooling and exhaust systems. Refer to engine and engine component manufacturer's maintenance publications for product specific inspection, repair, and maintenance procedures.

6.002 Description

R22-series helicopters are powered by one of four different Lycoming engines. O-320-A2B or O-320-A2C engines are installed in standard model R22s and are normally rated at 150 horsepower. O-320-B2C engines are installed in R22 HP, R22 Alpha, and R22 Beta models and are normally rated at 160 horsepower. Beta II/Mariner II helicopters have an O-360-J2A engine capable of 180 horsepower, derated by Lycoming to 145 horsepower. All engines are derated to 124 maximum continuous horsepower (MCP) by limitation of manifold pressure and RPM. Beta, Mariner, and Beta II/Mariner II helicopters have a 5-minute takeoff rating of 131 HP (see Pilot's Operating Handbook). Starting assist for O-320-A2B engines is provided by an impulse coupling installed on the engine-left (helicopter-right) magneto. Starting assist for O-320-A2C, O-320-B2C, and O-360-J2A engines is provided by a starter vibrator system and retard points in the engine-left magneto. Tachometer points in the engine-right magneto supply engine RPM information to the governor controller and engine tachometer. At 104% engine tachometer indication the engine is turning 2652 RPM.

Induction is through an air filter located in a carburetor-mounted air box assembly. Carburetor heat is supplied by an exhaust-pipe-mounted scoop and duct. Carburetor heat is controlled through a cable-operated guillotine valve in air box. Carburetor inlet air is filtered, even with carburetor heat on. Provision for an obstructed air filter is provided by a spring loaded bypass valve mounted on the air box cover, or by air box flexing. On Beta II/Mariner II aircraft, application of carburetor heat is correlated with changes in collective setting through a friction clutch to reduce pilot work load. Lowering collective mechanically adds carburetor heat and raising collective reduces carburetor heat. The pilot may override the friction clutch and increase or decrease carburetor heat as desired. A latch is provided at the carburetor heat control knob to lock carburetor heat off when not required.

Cooling is supplied by an engine-mounted fanwheel enclosed by a fiberglass scroll. The scroll ducts cooling air to engine-mounted panels which in turn direct air to cylinders, external oil cooler, alternator, and main rotor gearbox.

Power is transmitted through a vertically mounted sheave-and-belt system which is engaged by an electric belt tension actuator.

Battery charging and electrical power is supplied by 60-amp belt-driven alternator. A 70-amp alternator is optional.

6.100 Powerplant

> NOTE
>
> Refer to engine and engine component manufacturer maintenance publications for product specific inspection, repair, and maintenance procedures.

6.110 Engine Removal

> NOTE
>
> If engine is to be removed to facilitate a lower frame replacement, engine mount change, or firewall repair, fanwheel can remain installed. However, if engine is to be disassembled, remove fanwheel per § 6.210.

1. Disconnect static line from and remove aft cowling, tailcone fairing, B429-5 frame.

> NOTE
>
> If aux tank installed, defuel helicopter. Remove aux tank.

2. Disconnect main rotor gearbox cooling duct and remove horizontal firewall access panel (aft right-hand).

3. Remove clutch assembly per § 7.210.

4. Remove side skirts. Turn off fuel selector valve and disconnect fuel hose at carburetor. Cap fuel hose and carburetor inlet port.

5. Disconnect carburetor throttle linkage at carburetor bellcrank, mixture control cable at carburetor, carburetor heat control at air box, and carburetor air temperature probe at quick-disconnect, located approximately four inches from probe in a heat shrink sleeve. Remove carburetor and air box assembly.

> NOTE
>
> Air box and carburetor may be removed as a unit.

6. Disconnect oil pressure hose from elbow on accessory housing and cap exposed connections.

7. Disconnect manifold pressure line from forward, left cylinder fitting and clamp and cap exposed connections.

8. Identify for reinstallation and disconnect engine ground straps, alternator leads, starter leads, oil pressure line, cylinder head temperature lead, and oil temperature lead. Disconnect all clamps attaching wiring to steel tubular frames. Disconnect belt tension actuator motor leads.

9. Disconnect cabin heater duct, if installed (optional equipment).

10. Disconnect primer line, if installed (optional equipment).

6.110 Engine Removal (cont'd)

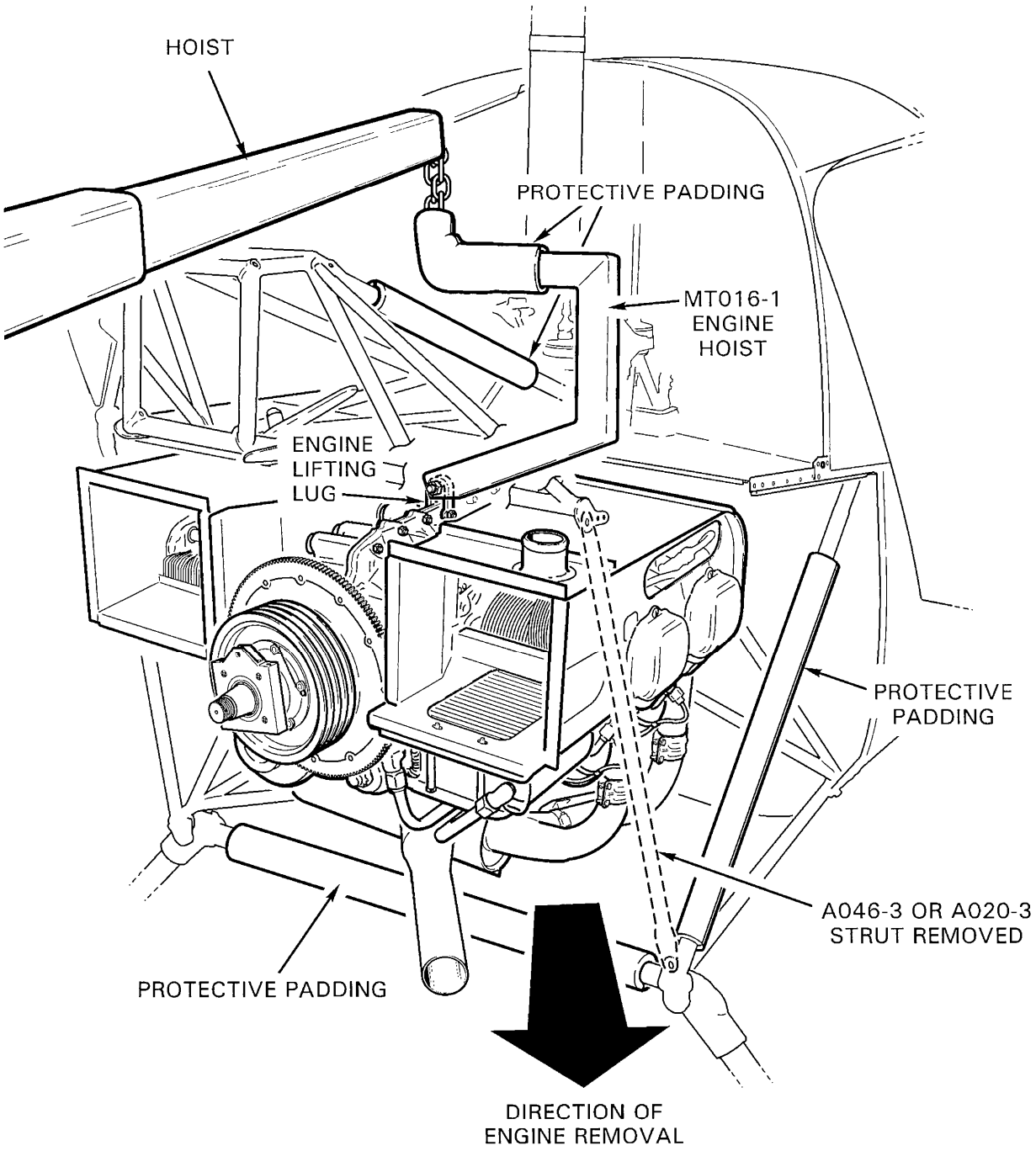

FIGURE 6-1 POWERPLANT REMOVAL

6.110 Engine Removal (cont'd)

11. Install protective padding per Figure 6-1.

12. Connect MT016-1 "C" fitting to a minimum 500-pound capacity hoist and to engine lifting lug per Figure 6-1. Take up any slack in chain or cable of hoist. Engine mounting pads have shims placed between pads and engine mounts for proper engine alignment. Note shim stack for each mount and record for reinstallation.

13. Remove four engine mounting bolts. This will require removal of right-side (engine -left) spark plug access cover.

14. Place a support stand under tail skid or remove tailcone.

15. Remove tubular steel strut at right rear corner of steel tube structure. With a person on each side of engine, carefully remove engine. Vary height of engine as required to clear aft cross tube during removal. Swing engine clear of helicopter. Refer to Figure 6-1.

6.120 Engine Installation

a) Connect MT016-1 "C" fitting to a minimum 500-pound capacity hoist and to engine lifting lug per Figure 6-1. Carefully hoist engine and swing it into alignment with engine mounting pads.

b) Select appropriate shims as recorded during engine removal. If no record is available, install a 0.063-inch thick shim between both lower mounting pads and engine and install a 0.190-inch thick shim between both upper mounting pads and engine. Install engine mounting bolts, torque per Section 1.320. Torque stripe per Figure 2-1. Install right rear tubular strut per Section 4.222 h).

WARNING

Damage or failure of drive line components may result from incorrect engine shimming.

c) Disconnect engine hoist, install horizontal firewall, right-hand spark plug access panel, and aft cowling. Reconnect main rotor gearbox cooling duct.

d) Install carburetor using a new gasket and torque nuts per Section 1.330. Install palnuts, torque per Section 1.320, and torque stripe per Figure 2-1.

6.120 Engine Installation (cont'd)

e) Reconnect throttle linkage to middle position of carburetor bellcrank. Refer to Section 10.150 for throttle rigging. Reconnect mixture control and carburetor heat control and rig these controls for 1/16" springback at each end of the control travel (See Section 10 for rigging of throttle).

f) Reconnect engine grounding strap and torque engine oil sump bolts per Section 1.330. Connect oil line to oil pressure sender. Connect manifold pressure line to engine and firewall connections.

g) Reconnect all electrical leads to oil temperature sender, cylinder head temperature sender, alternator, magnetos, etc.

h) Install cabin heater ducting and all wire and oil line clamp connections.

i) Connect fuel line to carburetor and inspect engine compartment for proper installation of all electrical connections, control attachment, ducting and routing.

j) Reinstall clutch assembly. (See Section 7.200).

k) Reinstall engine access panels, compartment panels and aft cowling.

l) Before running engine, check following components for proper alignment:

1) Sheave alignment per Section 7.230.

2) Tail rotor drive shaft shimming per Section 7.330.

3) Cooling shroud-to-tailcone clearance 0.250 inch minimum.

4) Intermediate flex plate to tail rotor bellcrank clearance 0.250 inch minimum with belts over 10 hours, 0.125 inch minimum with new belts.

5) Clutch shaft angle per Section 7.240.

6) Upper sheave centering per Section 7.250.

NOTE
Fill engine to proper oil level.

6.130 Engine Shimming

To facilitate sheave proper alignment, the engine must be shimmed to 3.55/3.65 inches, measured between ring gear top and bottom of upper frame's long cross tube with clutch engaged.

1. Engage clutch.

2. Measure ring gear-to-upper frame cross tube dimension as shown in Figure 6-2. If dimension exceeds 3.65 inches, an equal amount of shims must be added between lower frames and both the lower-left and the lower-right engine rubber mount pads. Use following formula to calculate required maximum shim thickness:

   $$\frac{\text{(Measured ring gear-to-upper frame dimension)} - 3.55}{2} = \text{Calculated shim thickness}$$

   Select shim(s) as required up to, but not exceeding, calculated shim thickness. Shims are available in thicknesses of 0.032 inch, 0.063 inch, and 0.190 inch. Removing an equal amount of shims from between both lower frames and the lower-left and the lower-right engine rubber mount pads will increase ring gear-to-upper frame cross tube dimension.

3. Disengage clutch

4. Remove side skirts.

5. Loosen upper-left and lower-left engine mount bolts. Leaving right engine mounts torqued, install selected shim(s) between lower-left frame and lower-left engine mount pad. Slotted shims, if used, may be stacked together but must be installed between unslotted shims and safetied. See Figure 6-2A.

6. Torque engine-mount bolts per Section 1.320.

7. Remove right-side spark plug inspection panel. Loosen upper-right and lower-right engine mount bolts. Leaving left engine mounts torqued, install selected shim(s) between lower-right frame and lower-right engine mount pad.

8. Torque engine-mount bolts per Section 1.320.

9. Engage clutch. Verify ring gear-to-upper frame cross tube dimension as shown in Figure 6-2. Adjust as required.

10. Torque stripe nuts per Figure 2-1.

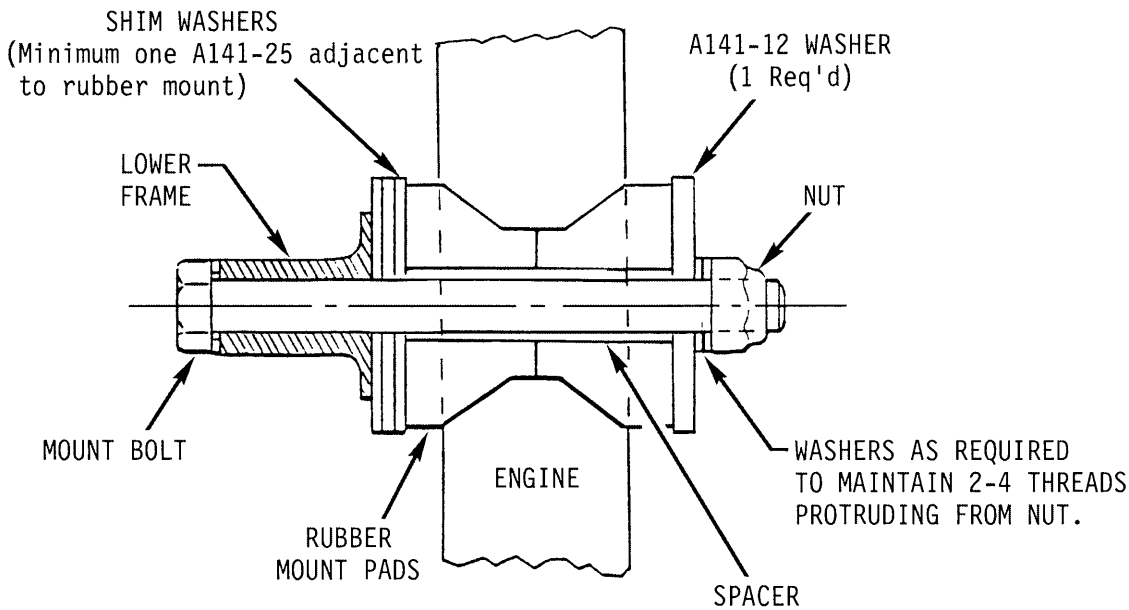

ADD SHIM WASHERS A141-12(0.190 inch), A141-24(0.032 inch), A141-25(0.063 inch) AS REQUIRED TO SHIM ENGINE.

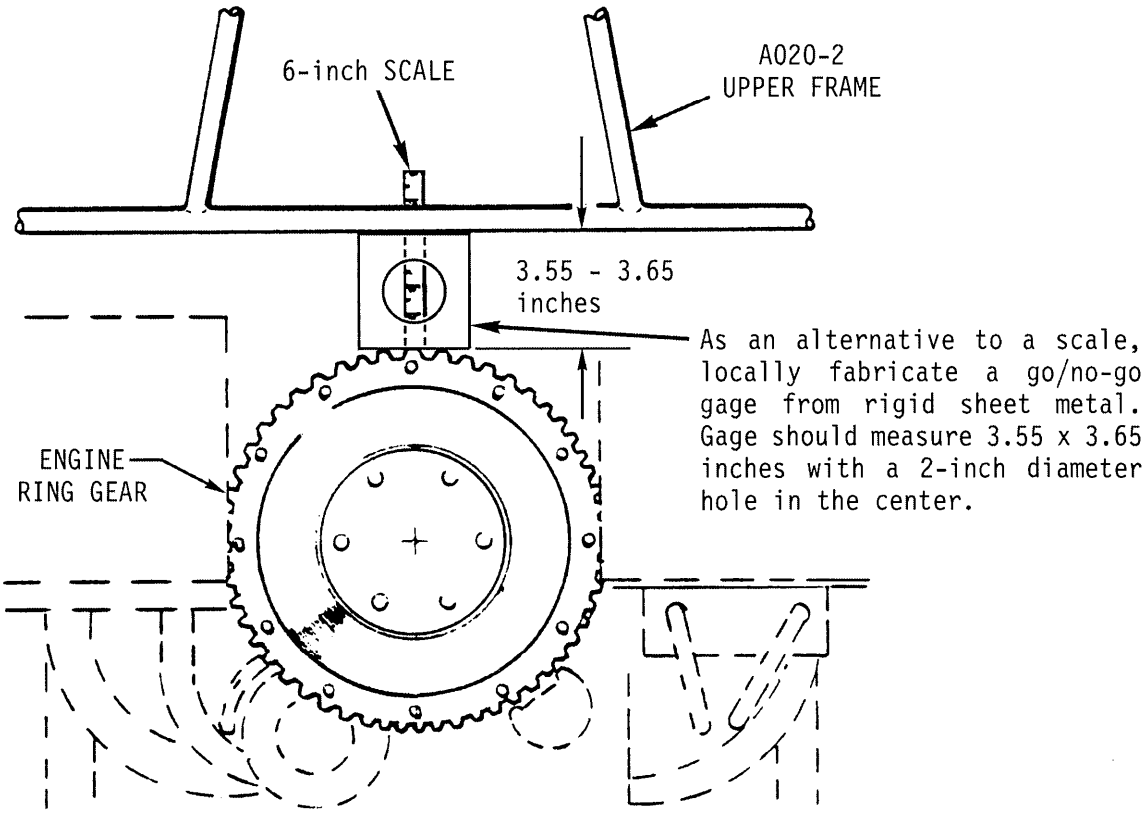

FIGURE 6-2 ENGINE INSTALLATION

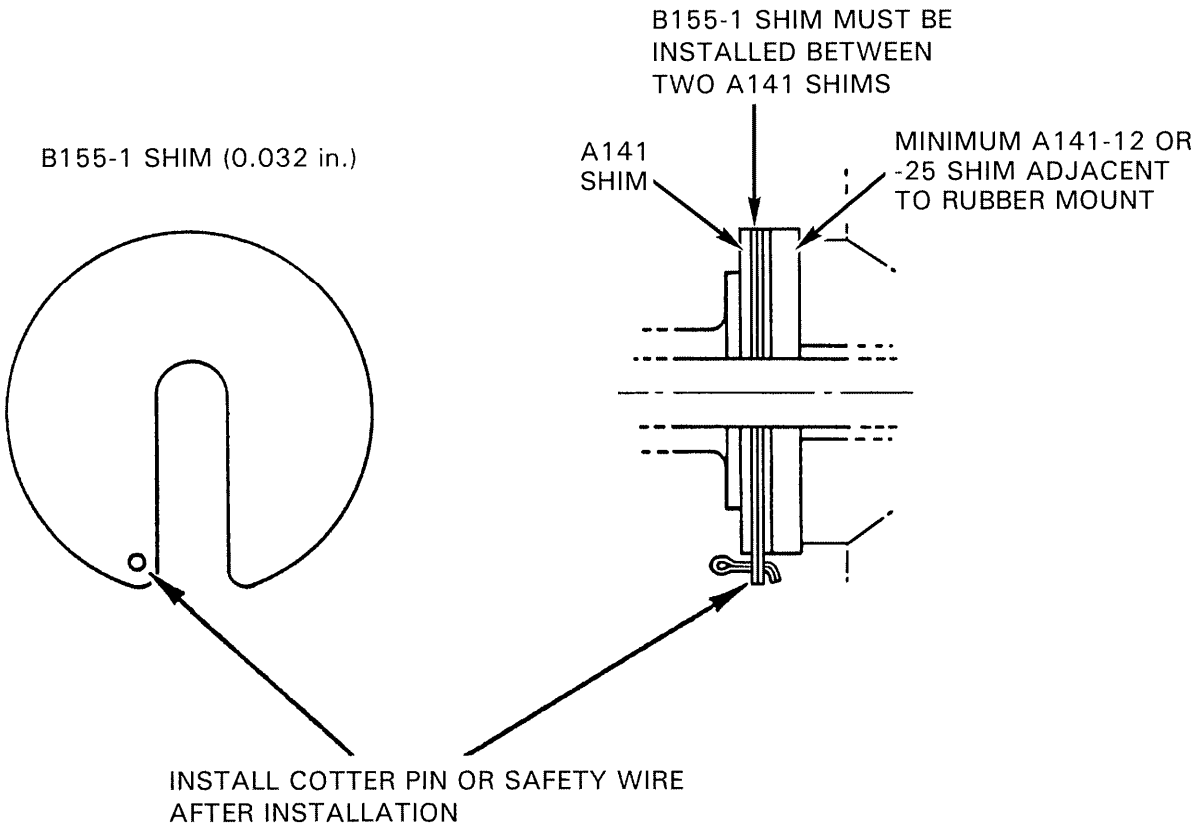

FIGURE 6-2A B155-1 ENGINE SHIM

NOTE

Engine mounting shims added or subtracted at two bottom engine mounts will change engine ring-gear-to-frame dimension by approximately twice the thickness of engine mount shim.

Example: Adding a 0.032-inch thick shim at each bottom engine mount will raise rear of engine approximately 0.064 inch.

6.130 Engine Shimming (cont'd)

> NOTE
>
> AN6- engine mount bolts are obsolete and must be replaced with NAS1306- or NAS6606- series bolts when shimming engine.

11. Check clutch sheave alignment per Section 7.230.

12. Reinstall engine inspection covers and side skirts.

13. Adjust throttle correlation rigging per Section 10.150.

6.200 COOLING SYSTEM

6.210 Fanwheel Removal

> NOTE
>
> If same fanwheel is to be reinstalled then orient starter ring gear support to magneto timing position and mark fanwheel at split line of scroll; this will minimize need for new balance weights. See Figure 6-3B.

a) Remove fiberglass scroll-to-engine cooling panel perimeter screws and two bolts attaching lower scroll to lower actuator bearing block. Scroll lower half may be removed from scroll upper half at this time if desired.

b) Remove safety wire and roll pin from fanwheel retaining nut. Refer to Figure 6-3B. Secure MT091-1 engine ring gear holding tool to ring gear support and hold ring gear stationary. Remove fanwheel retaining nut.

> **CAUTION**
>
> Failure to secure MT091-1 tool to ring gear support may result in damage to support.

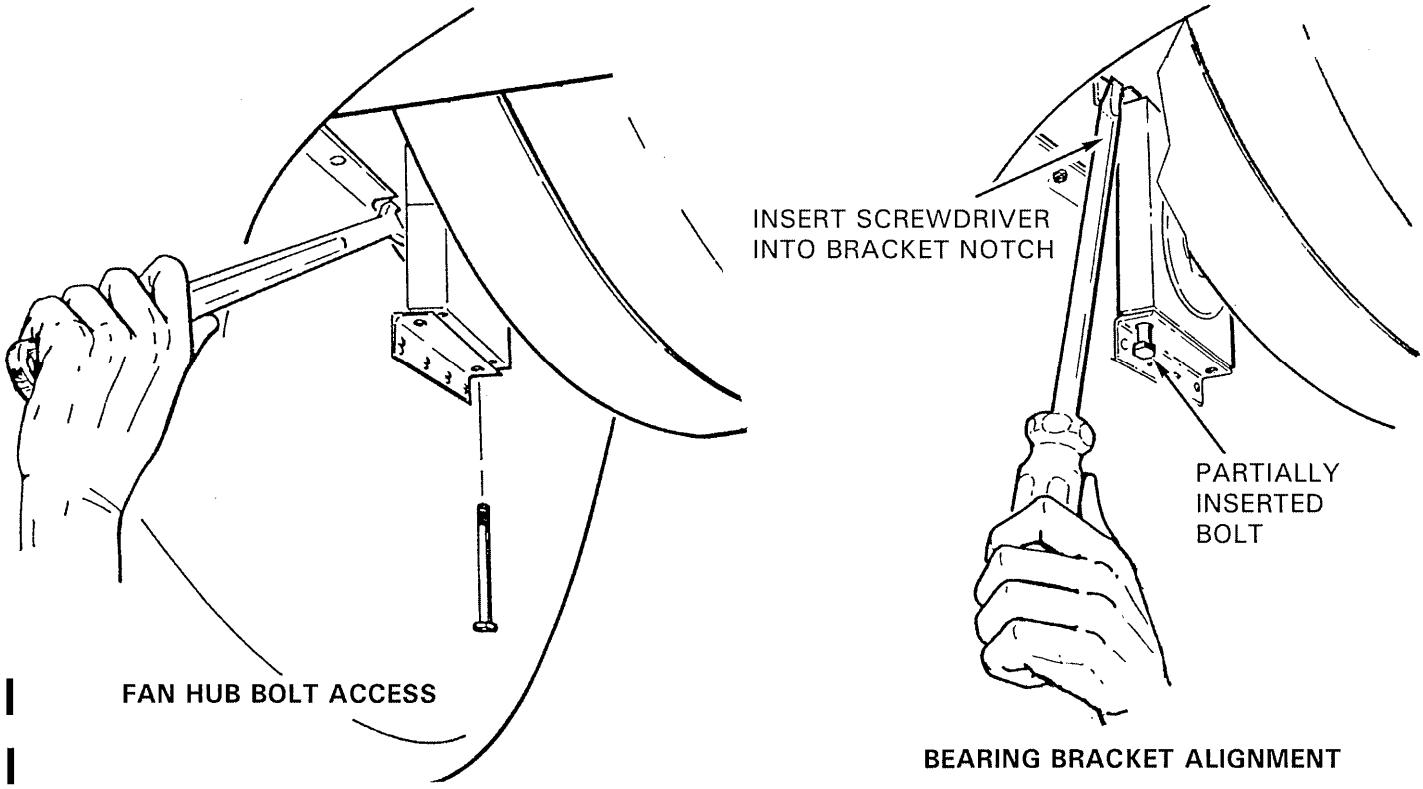

FIGURE 6-3A FAN HUB ACCESS AND LOWER BEARING BRACKET ALIGNMENT

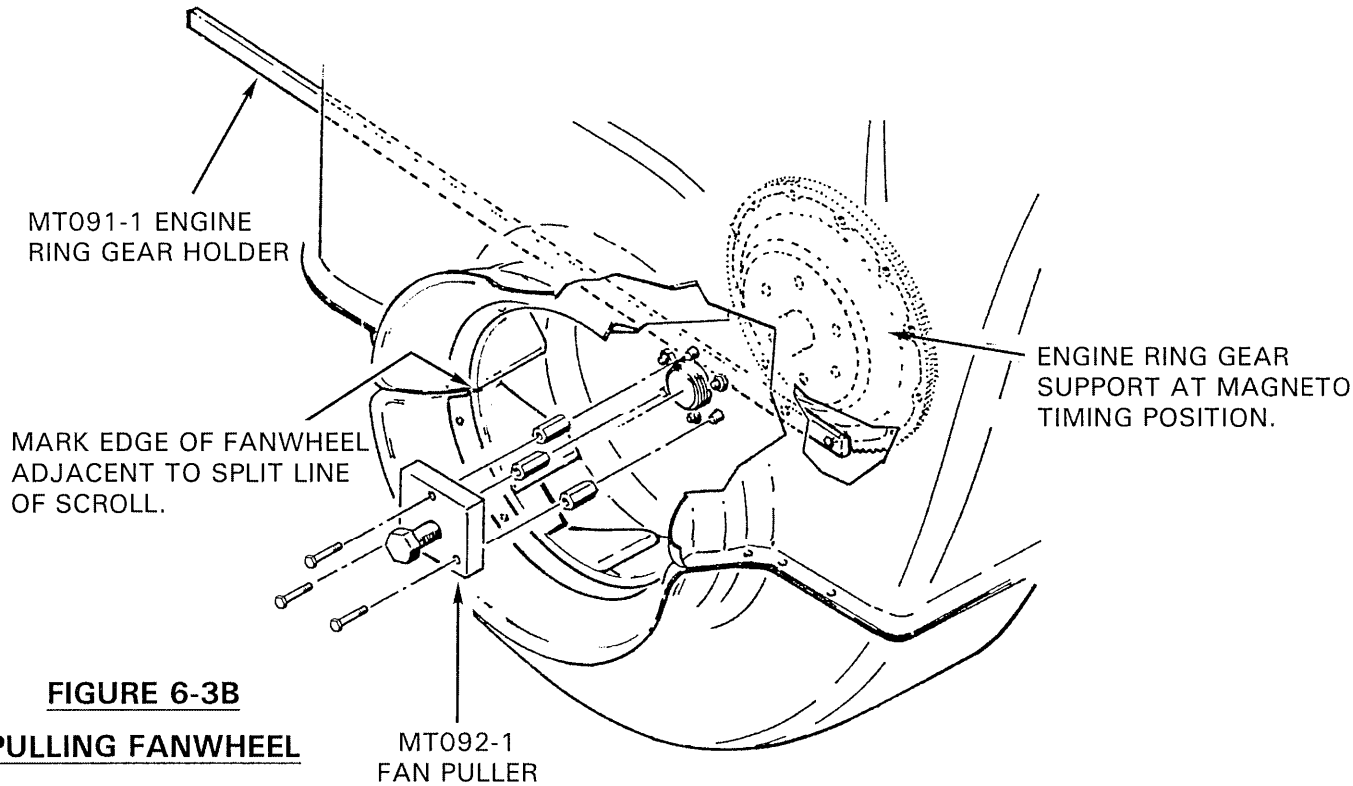

FIGURE 6-3B PULLING FANWHEEL

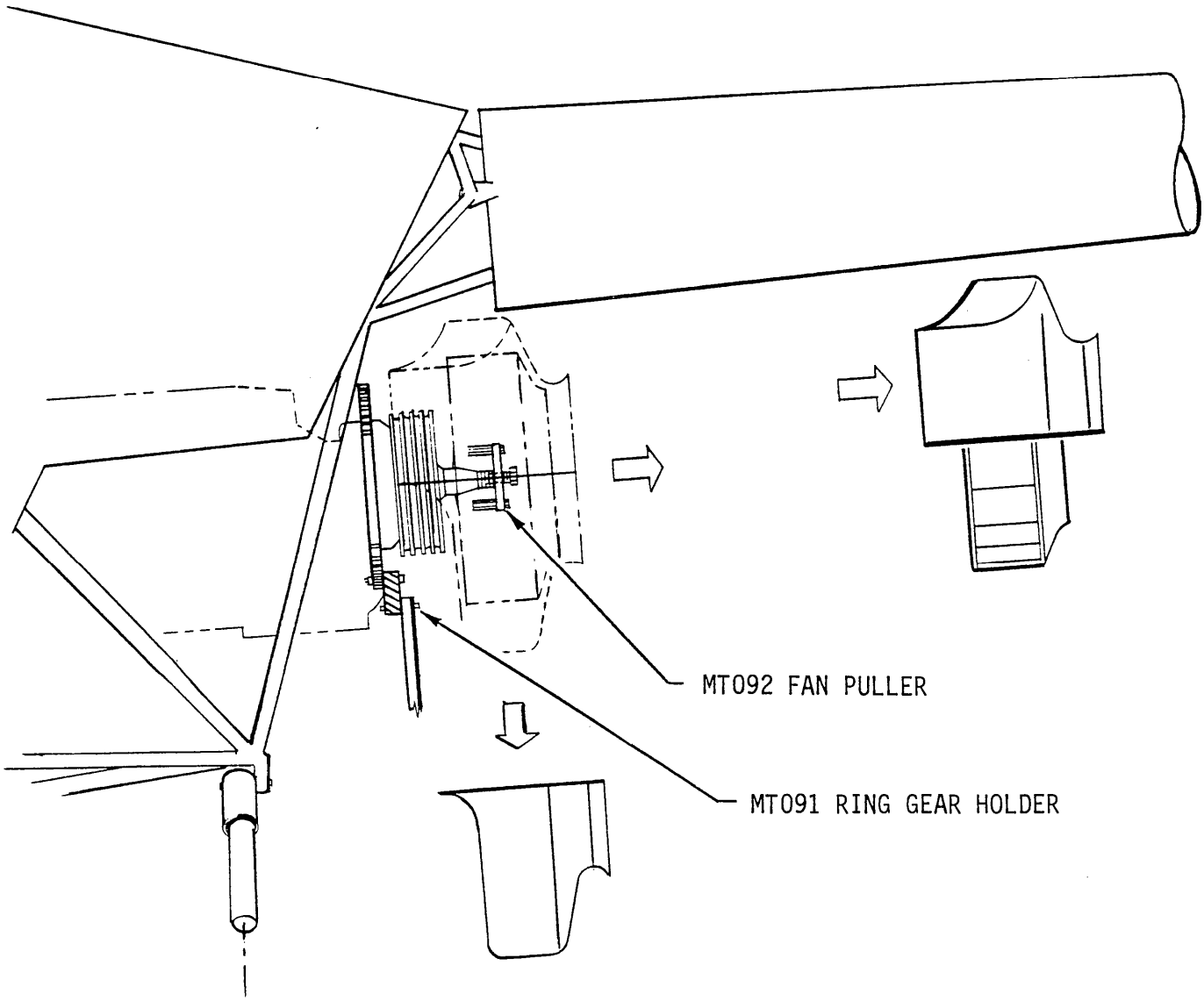

FIGURE 6-3C FANWHEEL AND SCROLL REMOVAL

6.210 Fanwheel Removal (cont'd)

c) Refer to Figure 6-3A. Using an open-end wrench to hold bolt heads, remove every other nut on center hub bolts and replace them with MT092-3 spacer nuts.

d) See Figure 6-3B. Ensure MT092-1 fanwheel puller tool's large center bolt is unscrewed sufficiently so it will not contact fan shaft. Attach fanwheel puller to MT092-3 spacer nuts.

e) While holding ring gear stationary with MT091-1 tool, tighten fanwheel puller tool's large center bolt against fan shaft until fanwheel hub is unseated.

CAUTION

Support fanwheel assembly to prevent dropping it. Fanwheel may come off tapered shaft suddenly and with a loud noise.

f) Remove MT092 fanwheel puller and install fan hub nuts on fan hub bolts. Torque nuts per Section 1.330.

6.220 Fanwheel Installation

CAUTION

Beta II/Mariner II helicopters must use B174-1 Rev F (12 NAS6603-6 cone-to-fanwheel attach bolts) or subsequent fanwheels and A007-5 (1 11/16 inch nut) or subsequent shaft assemblies.

a) Clean tapered shaft and fanwheel hub with solvent. Verify no damage to shaft and hub. Thoroughly inspect A181 bearing; verify no roughness or dryness.

b) Place upper half of fiberglass cooling scroll on fanwheel and install fanwheel on tapered shaft.

NOTE

Upper half of cooling scroll must be installed with fanwheel as it will not clear tailcone or upper frame with fanwheel installed first.

NOTE

If installing original fanwheel ensure starter ring gear support is at magneto timing position and orient fanwheel to align with marks noted in Section 6.210(a).

c) Coat threaded portion of tapered shaft and castellated nut face with A257-9 anti-seize compound (thread lubricant). For A007-5 fan shaft, install MS20002 washer against hub. Install AN960-series washers and nut. Exercise care so no lubricant gets on tapered shaft.

6.220 Fanwheel Installation (cont'd)

d) Secure MT091-1 ring gear holding tool to ring gear support and hold ring gear stationary. Torque nut per Section 1.330 until roll pin can be installed in fan shaft. Safety roll pin with 0.041 inch diameter stainless steel wire (number of AN960-series washers may be adjusted to facilitate roll pin installation).

CAUTION

Failure to secure MT091-1 tool to ring gear support may result in damage to support.

e) Install lower cooling scroll half (if removed) and insert two long bolts through lower bracket and actuator bearing block until they enter upper bracket nut plates. Align upper bracket nutplate by inserting screw driver in bracket notch (see Figure 6-3A). Torque bolts per Section 1.320.

NOTE

When replacing Revision I and prior fanwheels with Revision J and subsequent fanwheels (ref Figure 6-4B), relocate D339-4 cover to coincide with different fanwheel bolt pattern using KI-124 Kit.

f) Install screws, nuts and washers around perimeter. Torque nuts to 15 in.-lb plus nut drag.

g) Refer to Figure 2-9. Mark fanwheel with torque seal directly opposite each end of fanwheel nut roll pin to allow detection of movement between fanwheel and fan shaft.

h) Check B229 lip to fanwheel inlet clearance per Figure 6-5C. If necessary, lip clearance may be adjusted by elongating lip mounting holes.

i) Dynamic balance per Section 6.240 is required after fanwheel installation.

6.230 Reserved

6.240 Balancing Fanwheel

NOTE

The following instructions pertain to Chadwick-Helmuth Model 8350 and 177-series (Vibrex) equipment. When using Chadwick-Helmuth Model 192- or 8500- series, MicroVib or equivalent balancing equipment consult the equipment's specific operating instructions.

6.240 Balancing Fanwheel (cont'd)

a) Install accelerometer on lower actuator bearing left bolt per Figure 6-4A. Accelerometer wire should be pointed down. A suitable bracket may be assembled from two accelerometer brackets or may be fabricated.

b) Place 4270 target tape at one fan vane edge per Figure 6-4A.

c) Set Strobex mode to position B. Set Balancer RPM range to X10 scale. Set the Balancer RPM dial to 265.

d) Start engine and run helicopter at 104% with rotor system engaged.

WARNING

Use extreme care near tail rotor.

e) Point Strobex at fanwheel nut and pull trigger. Note target tape clock angle (position).

f) Push Tune button on Balancer. Note change (if any) in target tape clock angle. While pushing Tune button, adjust RPM dial to bring target tape back to clock angle viewed in Step e). Release Tune button.

g) Repeat steps e) and f) as required until there is no change in target tape clock angle when Tune Button is pushed and released (i.e. Balancer is tuned).

h) Note target tape clock angle after Balancer is tuned.

i) Note vibration reading on Balancer IPS meter.

j) Shut down engine.

k) If IPS exceeds 0.2, balance weights must be changed. Rotate fanwheel until target tape is in position noted in step h). Increase balance weight by changing washers under nut closest to 1:00 position or by splitting required weight change among two nearest nuts per Figure 6-4B. Alternatively, weight may be decreased under nut closest to 7:00 position. Total washers under each nut must result in two-four threads protruding past nut to ensure proper clamp-up. Access balance weight bolt heads thru hole under D229-4 cover (if installed; cover may be retrofitted using P/N KI-111 Kit) on forward side of lower scroll or thru oil cooler access door (with a crowfoot on a flex handle) and rotating fanwheel as required. Ensure NAS1149F0316P washers (if installed, see Figure 6-5) are not dislodged if NAS6603-6 bolts are removed. Torque NAS6603 bolts per Section 1.330. Install D229-4 cover.

l) Recheck fanwheel balance and adjust as required to obtain less than 0.2 IPS.

m) Remove accelerometer.

INSTALL BRACKETS USING EXISTING HARDWARE.

SECURE ALL CABLES WITH DUCT TAPE

PHOTOCELL (USED INSTEAD OF STROBEX)

PHOTOCELL BRACKET

VELOCIMETER BRACKET

TARGET TAPE

DANGER! TAIL ROTOR

BALANCER

STROBEX (USED INSTEAD OF PHOTOCELL)

A181-4 BEARING ASSEMBLY

LEFT AN3 BOLT

A185-1 BRACKET

TWO ACCELEROMETER BRACKETS BOLTED TOGETHER.

ACCELEROMETER/ VELOCIMETER

ACCEROMETER/ VELOCIMETER CABLE

FIGURE 6-4A EQUIPMENT INSTALLATION

ADD WEIGHT BY INCREASING WASHER SIZE OPPOSITE ACCELEROMETER/VELOCIMETER. ALTERNATIVELY, REMOVE WEIGHT BY DECREASING WASHER SIZE ADJACENT TO ACCELEROMETER/VELOCIMETER. DO NOT REMOVE NAS6603-6 BOLTS.

AN960-10 WASHER = 0.05 IPS CHANGE

A141-17 WASHER = 0.10 IPS CHANGE

AN970-3 WASHER = 0.20 IPS CHANGE

MIX ABOVE SIZES AS REQUIRED FOR BALANCE. ENSURE 2-4 THREADS EXPOSED BEYOND NUT.

ACCELEROMETER/ VELOCIMETER SENSITIVITY AXIS

LIGHT SIDE

R

RADIUS R = 5.10 IN. ON REVISION "J" AND SUBSEQUENT FANWHEELS; R = 4.10 IN. ON REVISION "I" AND PRIOR FANWHEELS.

ROTATE FAN UNTIL TARGET TAPE IS AT CLOCK ANGLE NOTED IN 6.240 (H)

B174-1 FANWHEEL ASSY (LOOKING FORWARD)

HEAVY SIDE

FIGURE 6-4B FANWHEEL BALANCING

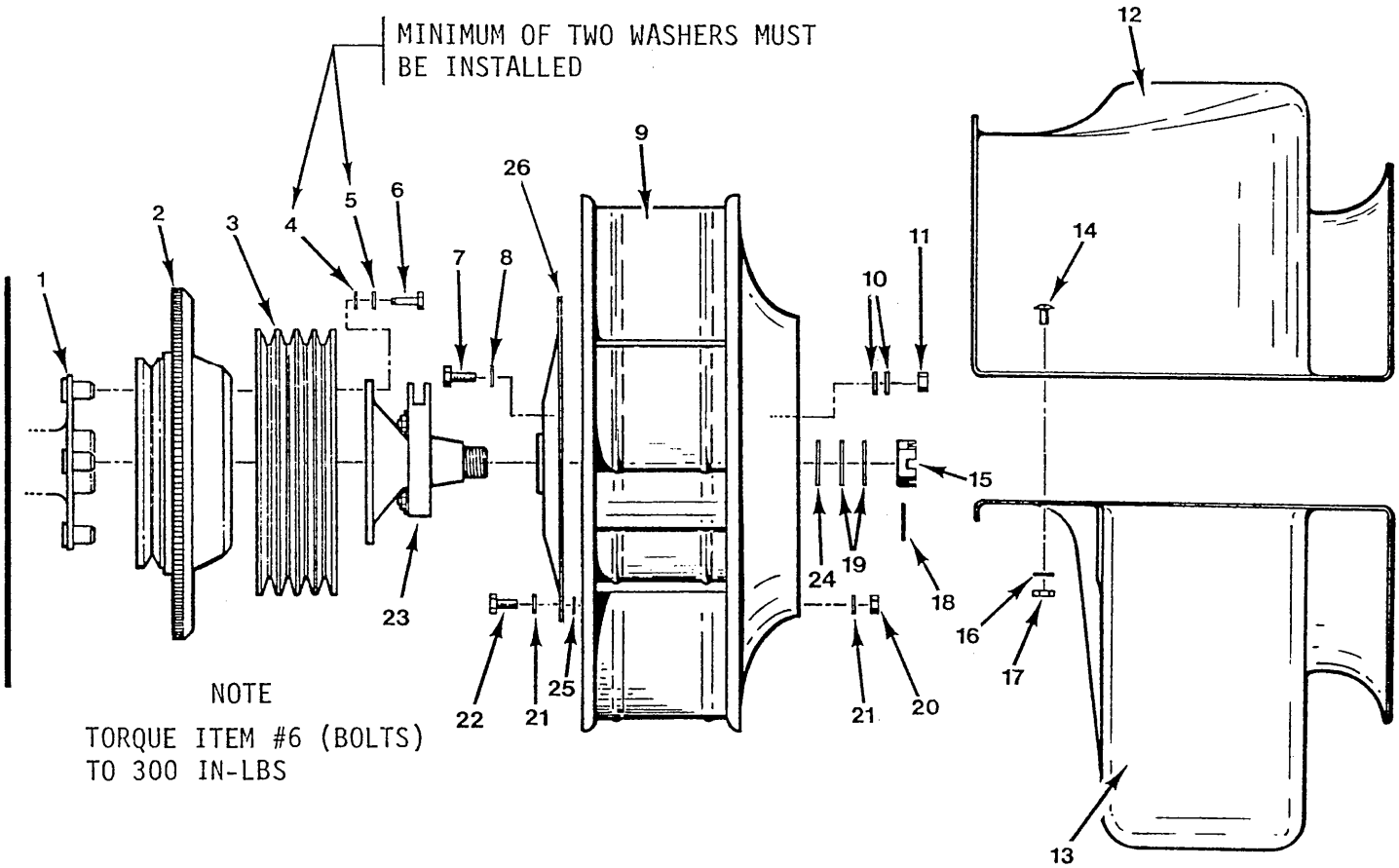

NUMBER	PART NO.	DESCRIPTION
1	-	Engine Flange
2	-	Engine Ring Gear
3	A493-1	Lower Sheave
4	AN960-616L	Washer
5	AN960-616	Washer
6	NAS1306-24H	Bolt
7	NAS1305-11	Bolt
8	AN960-516L	Washer
9	B174-1	Fanwheel Assy
10	AN960-516	Washer
11	NAS679A5	Nut
12	A236-1	Scroll (Upper)
13	A236-2* or A236-3**	Scroll (Lower)
14	AN525-832R6	Screw
15	AN320-15 AN320-18	Nut (For use on A007-3) Nut (For use on A007-5)
16	AN960-8L	Washer
17	NAS679A08	Nut
18	B350-2	Spring Pin
19	AN960-1616L (As req'd) AN960-1818L (As req'd)	Washer (For A007-3) Washer (For A007-5)
20	NAS679A3	Nut
21	AN960-10	Washer
22	NAS1303-3 NAS1303-6***	Bolt Bolt (on B174 Rev F and subsequent)
23	A007-3 A007-5	Shaft Assy Shaft Assy (Must use in Beta II and Mariner II)
24	MS20002-18	Washer (For use with A007-5)
25	NAS1149F0316P***	Washer
26	A187	Cone (Ref)

*Ship 0001 thru 0500

**Ship S/N 0500 and on

***Used on B174-1 Rev "F" and subsequent.

FIGURE 6-5 CENTRIFUGAL BLOWER INSTALLATION

6.250 Cooling Scroll Replacement

a) Remove the old scroll halves and actuator assembly, if installed.

b) Level the airframe laterally per Section 1.210. Assemble the A185-1 bracket on the bottom of the bearing housing with the A185-2 on the upper left and the A185-5 on the upper right. Use two AN3-41A bolts to secure the brackets (See Figure 6-5A). Place a bubble level across the top surface of the lower actuator bearing. Rotate the housing to level the bearing.

c) Place the upper scroll half (A236-1) and the engine cooling fan on the fanshaft. Do not disturb the position of the lower actuator bearing. Finger tighten the fanshaft nut. On Beta and Mariner ships with the larger oil coolers, the right-hand side of the upper scroll sits on the oil cooler ledge. Adjust the upper half laterally to center the lip of the fan and the edge of the inlet scoop, then clamp to the sheet metal shrouds (See Figure 6-5B).

d) Install the lower scroll half (A236-3) to the upper. Check the clearance between the lip of the fan and the edge of the inlet scoop. The clearance should be concentric all the way around the lip of the fan. Adjust both the halves as required and clamp into position (See Figure 6-5B).

e) Carefully mark the position of the lower actuator bearing and brackets on the scroll halves. Mark the mounting holes on the scroll halves through the sheet metal shrouds. Mark the top and sides of the scroll at the edge of the sheet metal shrouds. Using a 90 degree angle drill, with a #18 drill bit, match drill as many mounting holes as possible. Cleco clamp or install AN525-832 screws to secure the scroll as the holes are drilled. Match drill the two vertical mounting holes through the oil cooler ledge.

f) Position the upper and lower B229-2 lips at the inlet of the scroll. Adjust the clearance to the edge of the cooling fan to 0.030-0.070 inch. Clamp into position and match drill the lips to the scroll.

g) Remove the scroll and fan. Drill the remaining marked mounting holes, with a #18 drill bit. Assemble the A185 brackets on the drill fixture. Position the brackets on their alignment marks on the scroll. Drill through the brackets and scroll with a #40 drill bit. Position the reinforcing plates on the inside of the scroll. Enlarge the holes in the brackets, scroll and reinforcing plates with a #30 drill bit. Disassemble and deburr the holes. Reassemble and rivet the brackets and reinforcing plates using MS20470AD4 rivets.

6.250 Cooling Scroll Replacement (cont'd)

h) Position one NAS679A08 nutplate on upper scroll half at vertical mounting hole on inboard right hand side. Drill and rivet nutplate in position with flush head rivets.

i) Trim top and side edges of scroll upper half parallel with sheet metal cool panel flanges as required to maintain an edge distance of 0.01-0.02 inch

j) Trim upper scroll at lower actuator mounting bolt as necessary. No contact with bolthead is permitted.

k) Epoxy prime and paint grey.

l) Install fanwheel per Section 6.220.

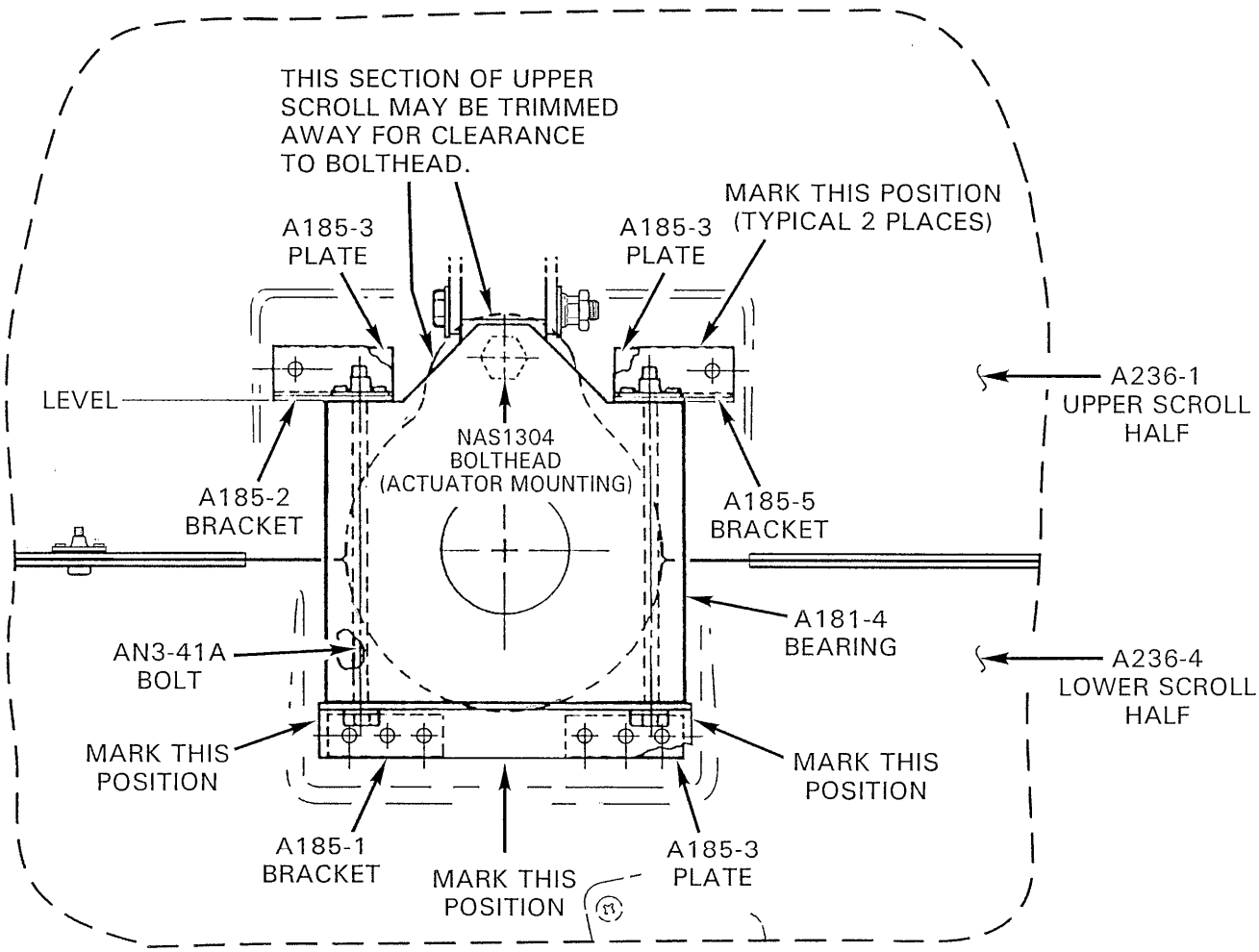

FIGURE 6-5A LOWER ACTUATOR BEARING INSTALLATION

(VIEW LOOKING AFT)

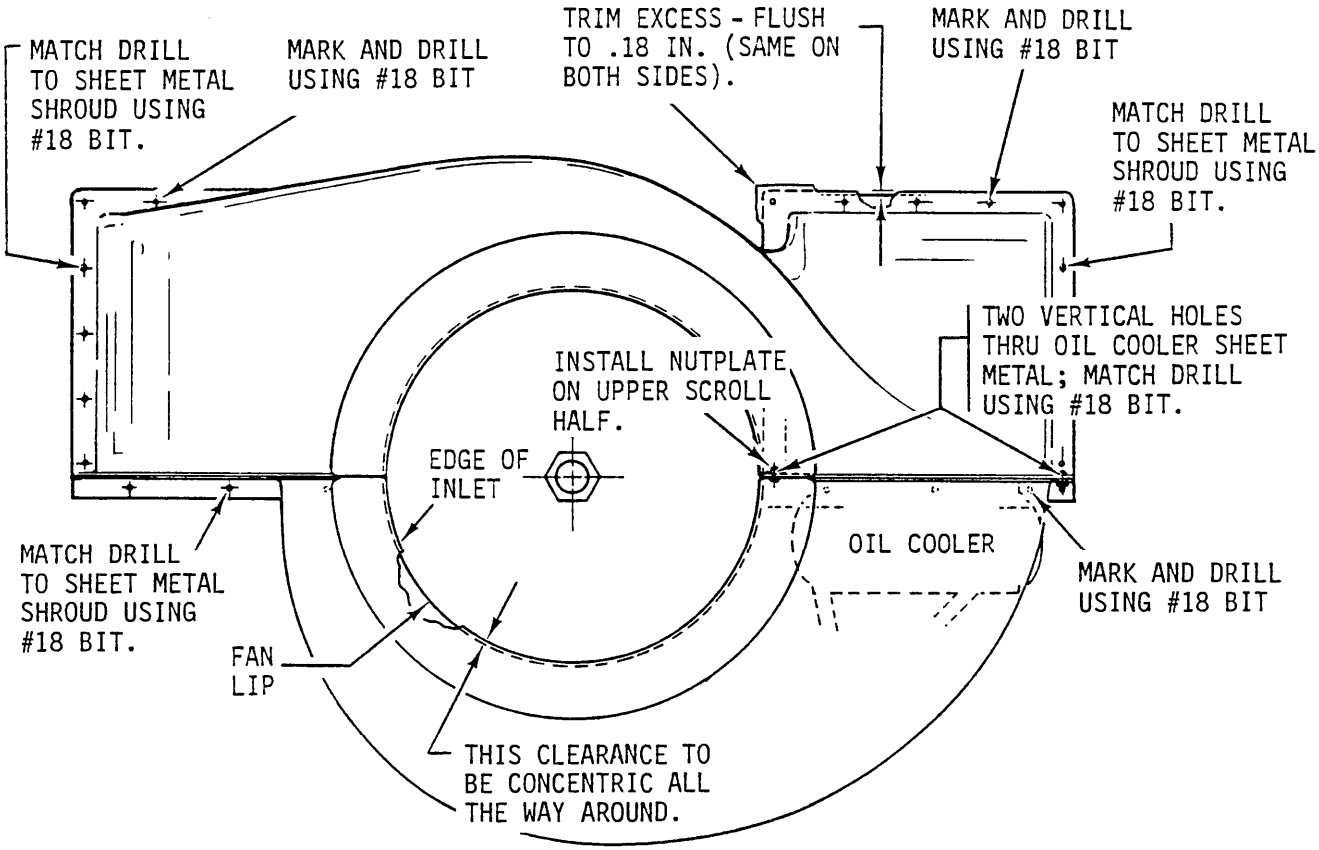

FIGURE 6-5B COOLING SCROLL REPLACEMENT

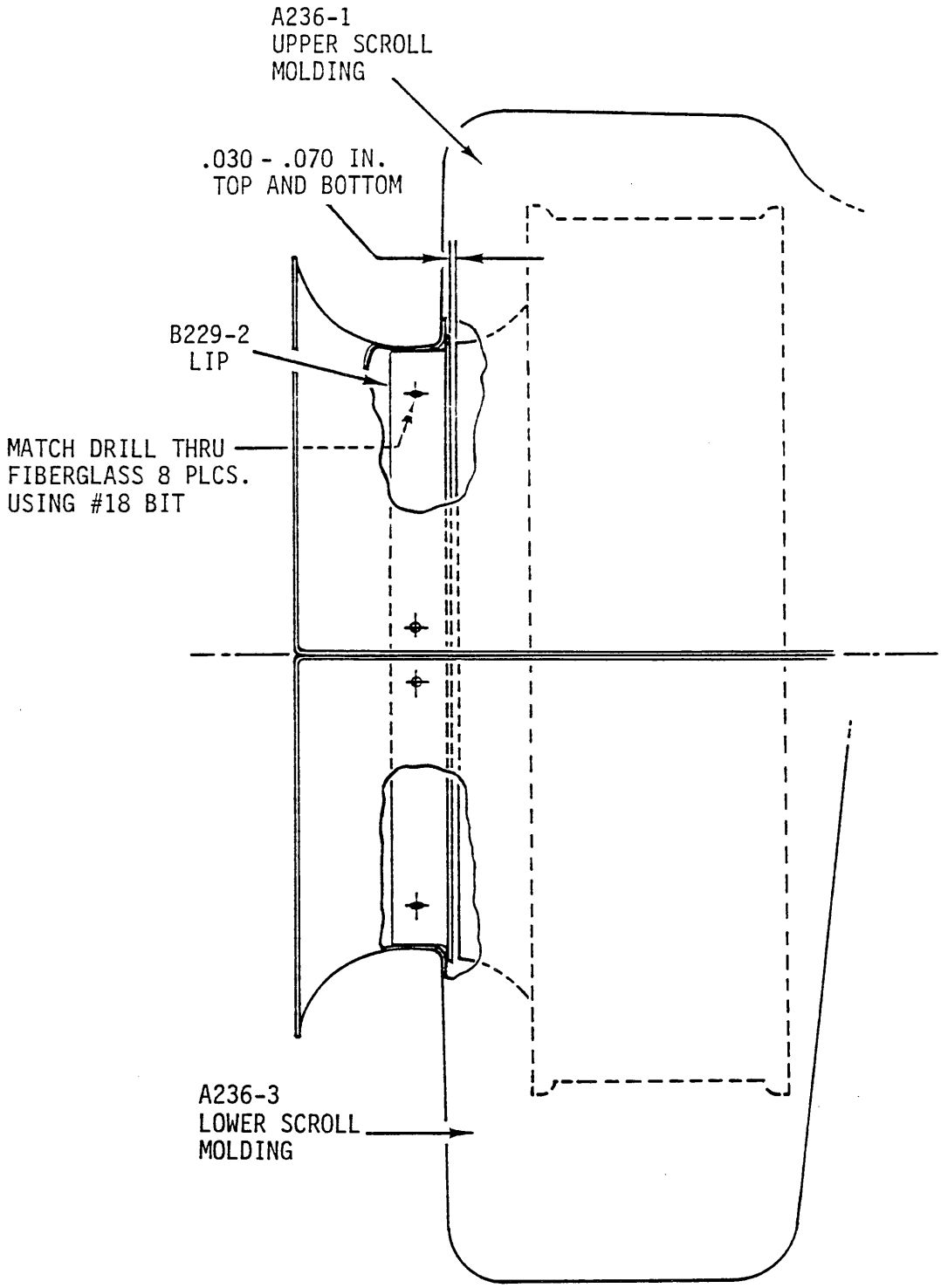

FIGURE 6-5C COOLING SCROLL REPLACEMENT
(FAN LIP POSITIONING)

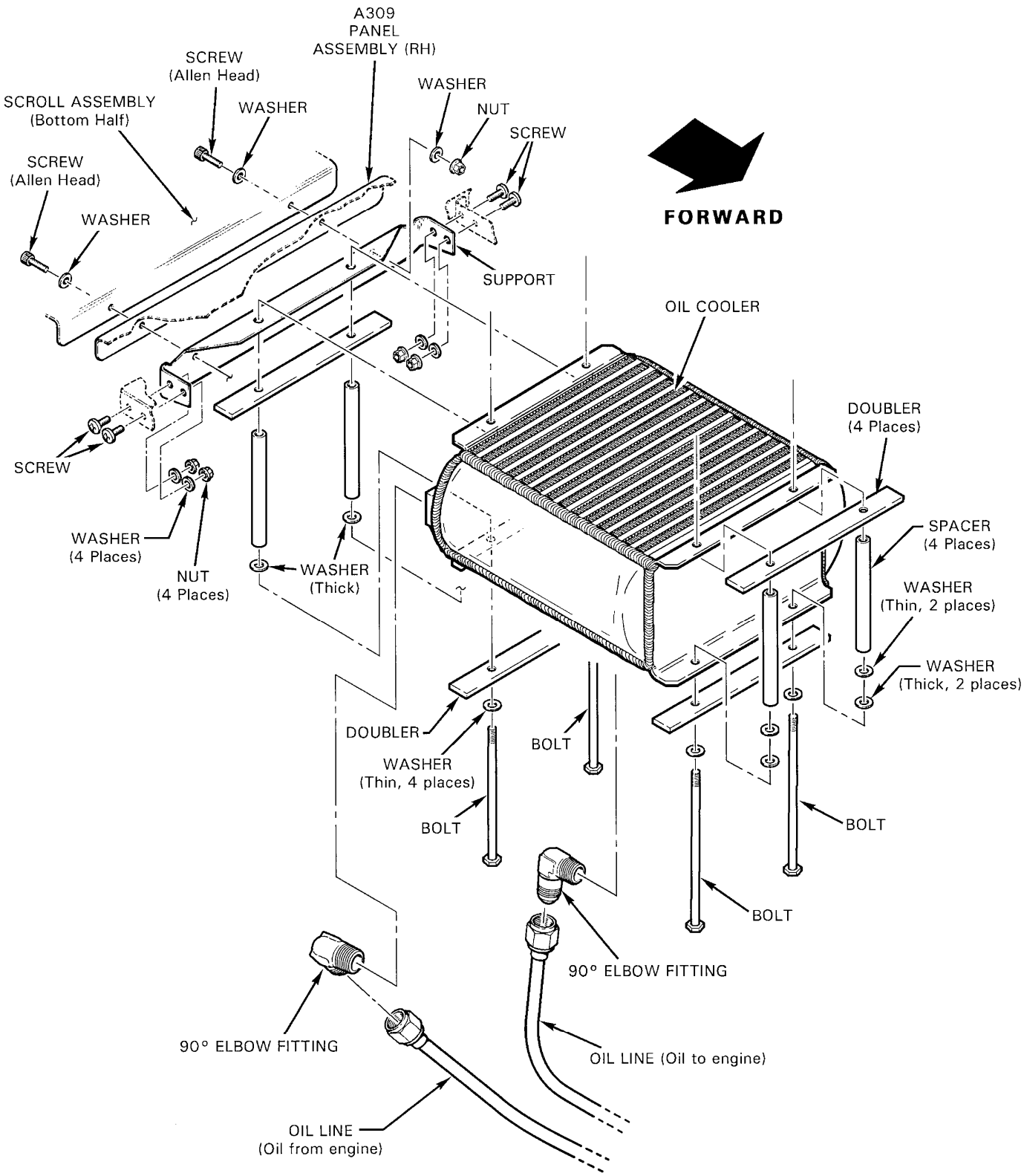

FIGURE 6-6 OIL COOLER INSTALLATION

6.300 LUBRICATION SYSTEM

> NOTE
>
> Refer to Pilot's Operating Handbook for grade and quantity of oil required. Refer to the Textron-Lycoming Operator's Manual for adjustment and maintenance of the lubrication system.

6.310 Oil Cooler Removal

1. Disconnect oil lines at cooler.
2. Remove four screws and nuts connecting support to panels.
3. Disconnect four mounting bolts and remove oil cooler and attached support. If replacing cooler do NOT attempt to remove and transfer blue-anodized 90 degree elbow fittings (steel fittings may be removed).

6.320 Oil Cooler Installation

> NOTE
>
> Seal elbows' pipe threads with B270-6 sealant prior to installing in oil cooler. Torque elbows per Section 1.320.

> **CAUTION**
>
> Hold threaded fittings on oil cooler with wrench to react torque when tightening elbows.

1. Install oil cooler and attached support to engine cooling panels using four mounting bolts. Torque AN3 bolts per Section 1.320 and torque stripe per Figure 2-1.
2. Install four screws and nuts connecting support to cooling panels (See Figure 6-6).
3. Connect oil lines, torque nuts per Section 1.330, and and torque stripe per Figure 2-1.

6.400 INDUCTION SYSTEM

6.410 Carburetor Removal

1. Disconnect air intake and carburetor heat hoses from air box.
2. Disconnect throttle linkage from carburetor bellcrank, mixture control cable from carburetor and carburetor heat control cable from air box slider valve.
3. Disconnect carburetor air temperature probe wiring.
4. Remove palnuts and nuts securing carburetor to intake manifold and remove carburetor and attached air box assembly.

6.420 Air Box Removal

1. Disconnect air intake hoses from air box.

2. Disconnect mixture control cable clamp(s) from air box.

3. Disconnect mixture safety spring from carburetor mixture control arm.

4. Open air box cover and remove air filter.

5. Disconnect carburetor heat control cable from air box and slider valve.

6. Cut safety wire and remove four bolts (or cap screws) securing air box to carburetor and remove air box and rubber gasket.

6.430 Air Box Installation

1. With air inlets on right, install air box and rubber gasket on carburetor and secure with bolts and washers (or cap screws and spacers on R22 S/Ns 2571-2664 with C057 air box). Torque fasteners per Section 1.330 and safety with 0.032 inch diameter safety wire.

2. Connect mixture control safety spring to carburetor mixture control arm. Verify spring moves arm to full rich position.

3. See Figure 6-7. Connect mixture control cable housing to air box. Push and pull on cable housing and verify it does not slip in clamp(s).

4. See Figure 6-7. Connect mixture control cable inner wire to mixture control arm. Verify mixture control moves carburetor mixture control arm stop to stop. Verify 0.03/0.10 inch clearance (spring-back) under knob at full-rich position. If required, adjust position of inner wire in A462 fitting. Torque A462 fitting per Section 1.330. Install palnut, torque per Section 1.320, and torque stripe.

5. Connect carburetor heat control cable to air box. Connect carburetor heat control cable inner wire to slider valve and torque A462 fitting per Section 1.330. Verify carburetor heat control fully opens and closes slider valve. Bend free end of inner wire ninety degrees where it exits A462 fitting, then cut wire as required to leave 0.25/0.50 inch remaining. Install palnut, torque per Section 1.320, and torque stripe.

6. Install air filter, close cover, and secure. Tighten four long bolts only enough to secure cover and eliminate looseness, then torque stripe. On R22 Mariners, seal air box cover perimeter with aluminum tape. If installed, verify spring-loaded alternate air door fully closes when released.

7. Connect air intake hoses to air box.

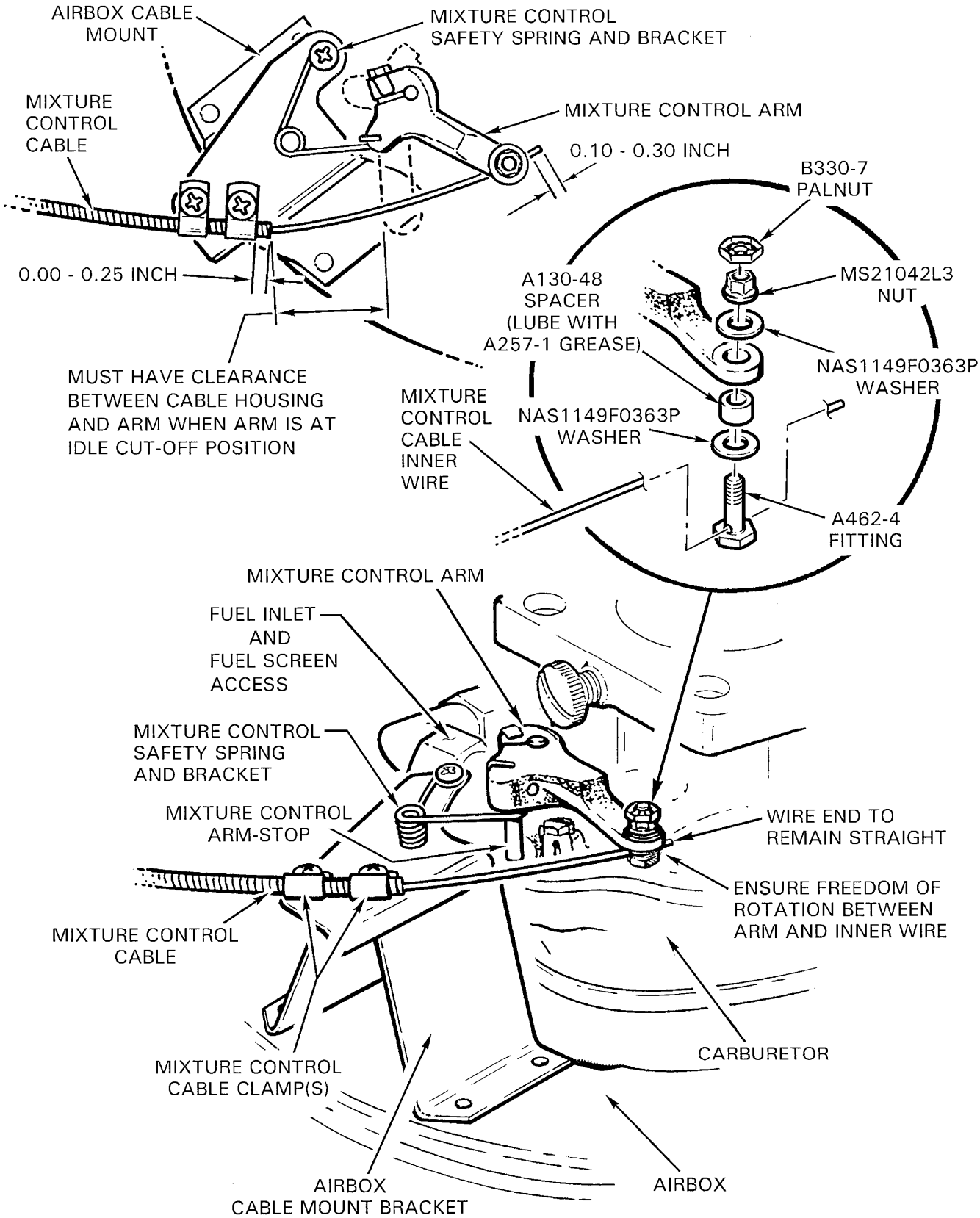

FIGURE 6-7 MIXTURE SAFETY SPRING INSTALLATION

6.435 Air Filter Cleaning

> NOTE
>
> Replace B771-1 air filters after 5 years or 600 flight hours, whichever occurs first.

1. Remove B771-1 air filter from airbox. Visually inspect filter and verify no obvious damage. Inspect filter's pleated media for cleanliness. If the media contains only dust, clean media using compressed air or water. Clean heavily soiled media using a mild soap & water solution.

   a. Compressed air: Maintain at least one-inch distance between air nozzle and pleated media and apply less than 40 psi compressed air thru media opposite the normal direction of airflow.

   b. Water: Apply less than 40 psi water stream thru media opposite the normal direction of airflow. Dry filter thoroughly using less than 160°F warm air.

   c. Mild soap & water solution: Apply less than 40 psi water stream thru media opposite the normal direction of airflow. Soak filter in a mild soap and water solution for more than 15 minutes but less than 4 hours. Gently agitate filter in soap solution to help remove dirt. Apply less than 40 psi water stream thru media in both directions. Dry filter thoroughly using less than 160°F warm air.

2. Using a bright light, examine pleated media and verify no holes or tears.

3. Verify filter sealing surfaces are a smooth, continuous circle and flat.

> NOTE
>
> Do not install a wet air filter. Do not apply oil to filter media.

4. Install filter in airbox.

6.440 Carburetor Installation

1. With carburetor butterfly bellcrank on left, install carburetor and new gasket on mounting studs of engine sump and secure with washers and nuts. Special torque nuts per § 1.330. Install palnuts, standard torque per § 1.320, and torque stripe.

2. Connect throttle push-pull tube to middle hole of carburetor butterfly bellcrank. Standard torque bolt per § 1.320. Install palnut, torque per § 1.320, and torque stripe.

3. See Figure 6-7. Connect mixture control cable inner wire to carburetor mixture control arm. Lightly tighten A462 fitting, but do not torque; fitting will be torqued in following step.

4. Install air box per § 6.430.

5. Verify idle RPM and idle mixture per § 2.210.

6. Check throttle correlation rigging per § 10.150.

6.450 Carburetor Heat Scoop Removal

1. Disconnect hose from carburetor heat scoop.
2. 0-320 engine: Remove six screws securing curved sheet metal and remove sheet.

   0-360 engine: Remove two B277 clamps securing scoop assembly to exhaust manifold and remove scoop.
3. 0-320 engine: Remove four bolts securing scoop assembly to bead clamp on exhaust riser and remove scoop assembly. Remove additional clamp from exhaust riser above bead clamp.

6.460 Carburetor Heat Scoop Installation

1. 0-320 engine: Install A694 clamp and angle on #4 cylinder exhaust riser and lightly tighten. Attach scoop assembly on bead clamp and lightly tighten.

   0-360 engine: Install scoop assembly, secure with B277 clamps, and lightly tighten.
2. Connect air inlet hose to scoop assembly.
3. 0-320 engine: Position sheet on mounts. Move A694 clamp and rotate bead clamp (with attached scoop assembly) as required to minimize preload and ensure clearance from surrounding structure. Tighten A694 clamp. Standard torque bolts per § 1.320. Install sheet with six screws.

   0-360 engine: Move scoop assembly as required to minimize preload and ensure clearance with surrounding structure. Special torque scoop attach clamps to 30 in.-lb.

6.500 Exhaust System

6.510 Exhaust System Removal

1. Remove carburetor heat hose and, if installed, disconnect heater hoses from muffler shroud.
2. Protect landing gear aft cross tube with suitable covering. Disconnect exhaust flanges at cylinder heads and remove exhaust system and gaskets.

6.520 Exhaust System Installation

1. Position a gasket on each exhaust port.
2. Protect landing gear aft cross tube with suitable covering. Position exhaust system on engine and connect riser exhaust flanges to cylinder heads with washers and nuts. Remove protective cover from cross tube.
3. Loosen bead clamp on each riser. If required, remove curved metal sheet from carb heat scoop assembly.
4. Special torque exhaust flange nuts per § 1.330. Install palnuts and standard torque per § 1.320.
5. Install carburetor heat hose and connect heater hoses, if installed.
6. Standard torque bead clamp AN3 bolts per § 1.320. If removed, install curved metal sheet on carburetor heat scoop assembly and reposition clamps as required to minimize preload and ensure clearance from surrounding structure.

6.610 LOW-POWER CHECKLIST

When low engine power output is suspected, use the following checklist to verify:

1. Aircraft gross weight is not exceeded. Weigh aircraft if it was not weighed at last overhaul.
2. Engine oil pressure, oil temperature, and CHT are within limits.
3. MAP gage indicates ambient pressure (engine off).
4. Proper grade of fuel per Pilot's Operating Handbook.
5. Main rotor blades are clean and smooth (no rough paint).
6. Exhaust is unobstructed.
7. Main rotor blade trim tabs are not excessively bent.
8. Carburetor heat valve closes fully in OFF position.
9. Induction system is unobstructed. Air filter and both inlet hoses (ambient and carburetor heat) are clean, undamaged, unobstructed, and do not collapse in flight. Carburetor-to-engine gasket is correct size.
10. Engine tachometer indication is correct. Verify with digital tachometer (such as found in newer dynamic balancing equipment) or similar equipment.
11. Oil screens or filter do not exhibit metallic debris consistent with internal engine damage.
12. Proper cylinder compression (both leakage and direct) per Lycoming recommendations.
13. Mixture neither excessively lean nor rich. Compare fuel flow. Verify fuel filter cleanliness, check spark plug indications, check carburetor throttle body-to-float bowl screw security per Lycoming SB 366.
14. Proper spark plug type and condition.
15. Proper magneto-to-engine timing. Verify engine-left (helicopter-right) magneto is not operating in retard mode when ignition switch is in BOTH position (disconnect retard terminal after starting engine and compare hover MAP indications; lesser hover MAP with retard terminal disconnected indicates magneto was operating retarded).
16. Proper fuel flow and unobstructed carburetor fuel inlet screen. Perform fuel-flow check per Section 12.
17. If primer-equipped, verify fuel is not leaking past primer pump (ensure primer pump is locked) and air is not leaking past fittings in cylinder head.

6.610 LOW-POWER CHECKLIST (cont'd)

18. Carburetor or fuel control throttle lever contacts full-throttle stop (collective must be raised slightly).

19. Carburetor or fuel control mixture arm contacts stop when mixture control is in full-rich position and mixture arm does not exhibit springback at extremes of travel when disconnected from control cable/safety spring (due to internal binding).

20. No induction/MAP system leaks. To check MAP system, disconnect MAP line at cylinder head fitting and apply suction with syringe until MAP gage indicates 10 inches Hg. Monitor gage for one minute; indication should rise no more than 1 inch Hg. Verify carburetor throttle shaft bushings are not worn; check both axial and radial clearances. Intake leaks can also occur due to loose intake pipe connections in oil sump and/or cracked sump runner tubes. For O-320-B2C engines only, incorrect thin-flanged intake pipes P/Ns 61363, 61364, or 61365 used in place of correct P/Ns LW-16728, LS-16729, and LW-16730 can cause leaks in conjunction with deep-counterbore flange P/N 74360.

21. Proper exhaust valve guide clearance per Lycoming SB388B.

22. Proper dry-tappet clearance per Lycoming Overhaul Manual.

23. With lifters pumped up (valve lash removed), each intake valve should exhibit equal travel during opening when measured with a dial indicator. Similarly, each exhaust valve should exhibit equal travel during opening. Unequal travel indicates damaged cam lobe(s).

24. Proper magneto internal timing.

25. Carburetor float bowl fuel level correct.

26. Cylinder head intake port has radiused edge where inlet airflow turns 90 degress toward valve. If no radius exists, contact Lycoming Technical Support.

27. Proper crankshaft-to-camshaft timing: As #1 piston passes TDC on compression stroke, the #2 intake valve should open while the #2 exhaust valve closes (valve overlap position).

28. If O-320/O-360/O-540 engine exhibits low-power immediately after overhaul, verify correct 8.5:1 compression ratio piston P/N 75089 has been installed (instead of 7.0:1 low compression piston P/N 75413).

6.700 THROTTLE CONTROL AND CARBURETOR HEAT ASSIST

The throttle control consists of a twist grip integral with the collective control, an overtravel spring, throttle bellcrank, throttle push-pull tube, a carburetor throttle lever, and carburetor heat assist factory installed on S/N 2571 and subsequent.

6.710 Overtravel Spring (Refer to Figures 8-6 and 10-8)

6.711 Overtravel Spring Removal

1. Remove belly panel and vertical panel between seat backs.
2. Disconnect A327-1 overtravel spring's upper rod end from collective throttle arm.
3. Disconnect A327-1 overtravel spring's lower rod end from bellcrank.
4. Remove overtravel spring.

6.712 Overtravel Spring Installation

1. Connect overtravel spring's lower rod end to bellcrank and torque per Section 1.32. Install palnut, torque per Section 1.320, and torque stripe per Figure 2-1.
2. Connect overtravel spring's upper rod end to collective throttle arm. Raise collective fully, and with throttle twist grip rotated full closed, verify dimension shown in Figure 10-8; adjust upper rod position as required. Torque screw per Section 1.330. Install palnut, torque per Section 1.320, and torque stripe per Figure 2-1.
3. Install belly panel and vertical panel between seatbacks.

6.720 (Reserved)

6.730 Throttle Push-Pull Tube Assembly

6.731 Throttle Push-Pull Tube Assembly Removal

1. Remove cover enclosing bellcrank beneath left seat baggage compartment. Disconnect throttle push-pull tube assembly from bellcrank.

2. Disconnect throttle push-pull tube assembly from carburetor and remove.

6.732 Throttle Push-Pull Tube Assembly Installation (Refer to Figure 10-8)

1. Insert throttle push-pull tube assembly forward thru firewall seal. Attach aft end to middle hole of carburetor throttle lever and tighten bolt.

2. Attach throttle push-pull tube assembly to bellcrank and tighten bolt.

3. Adjust throttle correlation rigging per section 10.150. Torque push-pull tube jam nuts(s) and palnut(s) (if installed), per Section 1.320 and torque stripe per Figure 2-1.

6.740 Carburetor Heat Assist

A carburetor heat assist device is installed on R22s with O-360 engines. The carb heat assist correlates application of carburetor heat with changes in collective setting to reduce pilot work load. Lowering the collective mechanically adds heat and raising the collective reduces heat. Collective input is transmitted through a friction clutch which allows the pilot to override the system and increase or decrease heat as required. A latch is provided at the control knob to lock carburetor heat off when not required.

6.741 Carburetor Heat Control Removal

1. Open air box.

2. Remove horizontal cover between seats.

3. Drive out spring pin on cyclic friction knob using a pin punch. Remove cyclic friction knob. Unscrew knob and collar from carb heat assist stem.

4. Raise cyclic cover and secure out of the way.

5. Remove and discard palnuts from carburetor heat slider valve fittings. Discard palnuts.

6. Loosen nut(s) securing carburetor heat control inner wire to valve.

7. Remove cotter pin and washer securing forward end of control to D334 bellcrank assembly.

8. Pull center wire out of conduit.

9. Remove B270-5 sealant surrounding conduit at vertical firewall. Remove screws securing conduit to keel panel and airbox.

10. Remove outer conduit.

6.740 Carburetor Heat Assist (Cont'd)

6.742 Carburetor Heat Control Cable Installation

1. Pull inner wire from new control. Route and secure conduit along keel panel, thru vertical firewall, and into air box with retained hardware.

2. Replace B270-5 sealant around cable at firewall pass-through.

3. Lubricate inner wire with A257-1 grease, insert into conduit. Connect forward end to bellcrank, install washer, and temporarily install cotter pin.

4. Secure cyclic cover in place, install collar and knob on stem. Verify 0.10 to 0.25 inch clearance between fitting on inner wire and forward end of conduit with control knob fully down. Reposition conduit as required.

5 Verify aft end of conduit has 0.00 to 0.15 inch protrusion into air box. As required, remove inner wire and trim conduit. Install inner wire, connect forward end to D334 bellcrank, install washer and secure with cotter pin.

6. Connect inner wire thru fitting(s) in carb heat slider valve. With knob fully down and slider valve fully aft, trim inner wire 0.10 to 0.03 inch beyond aft edge of fitting. Torque nuts on fittings per Section 1.330. Torque stripe per Figure 2-1.

7. Install air filter, close cover, and secure. Tighten four long bolts only enough to secure cover and eliminate looseness, then torque stripe. On R22 Mariners, seal air box cover perimeter with aluminum tape. If installed, verify spring-loaded alternate air door fully closes when released.

6.743 D334-5 Carburetor Heat Assist Bellcrank Assembly Removal

1. Remove belly panel and horizontal panel between seats.

2. Disconnect carburetor heat assist control inner wire from bellcrank.

3. Disconnect carb heat assist push-pull tube from B249 arm assembly. Remove six screws securing bellcrank assembly to keel panel and B368 stiffener.

4. Remove bellcrank assembly.

6.744 D334-5 Carburetor Heat Assist Bellcrank Assembly Installation

1. Position bellcrank assembly against, and with bearing block protruding thru, right keel panel.

2. Secure plate to keel panel with screws.

3. Install A142 screws thru stiffener into bearing block. Torque to 45 in.-lb and torque stripe.

4. Attach A336 push-pull tube to B249 arm assembly and torque bolt per Section 1.320. Install palnut, torque per Section1.320 and torque stripe per Figure 2-1.

5. Lubricate D333-3 fitting at forward end of carb heat control with A257-1 grease and secure to bellcrank with washer and cotter pin.

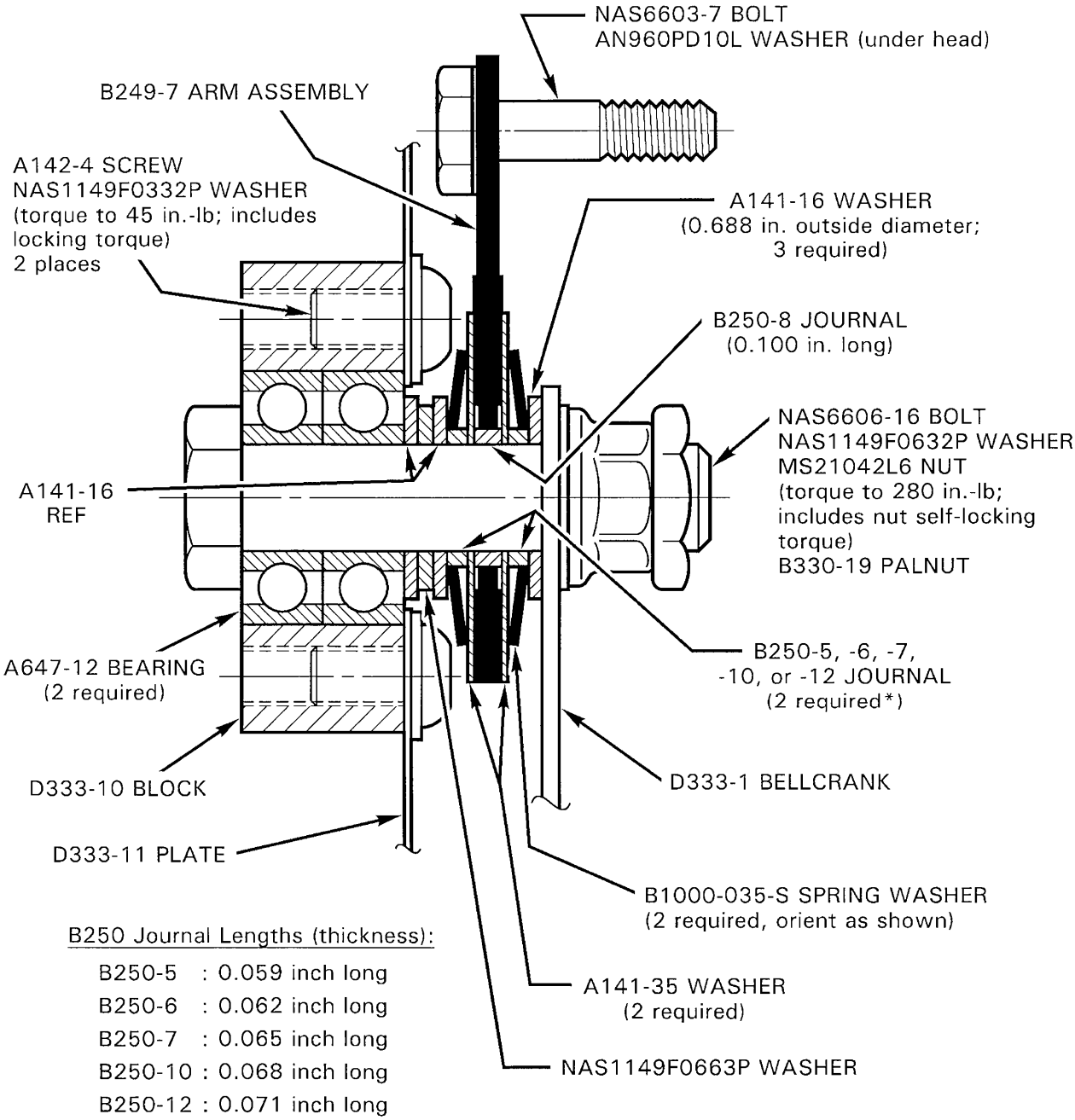

B250 Journal Lengths (thickness):

B250-5	: 0.059 inch long
B250-6	: 0.062 inch long
B250-7	: 0.065 inch long
B250-10	: 0.068 inch long
B250-12	: 0.071 inch long

*Install B250-5, -6, -7, -10, or -12 journals as required to produce a rotational friction of 10-12 inch-pounds. Journal dash numbers may be mixed. Measure rotational friction by clamping long side of D333-11 plate in padded vise w/B249-7 arm assembly against vice jaws and rotating bolt head with dial-indicating torque wrench.

FIGURE 6-8 D334 BELLCRANK ASSEMBLY
CARB HEAT ASSIST FRICTION ADJUSTMENT
(View looking aft)

6.745 D334-5 Bellcrank Friction Adjustment (Refer to Figure 6-8)

NOTE
Verify bolt head between arm and plate.

1. Measure rotational friction per Figure 6-8.
2. Adjust friction as required by exchanging B250 journals per Figure 6-8 (dash numbers may be mixed). Decreasing journal thickness increases friction. Torque NAS6606 bolt per Figure 6-8.
3. Install palnut, torque per Section 1.320, and torque stripe per Figure 2-1.

Intentionally blank

CHAPTER 7

DRIVE TRAIN

Section	Title	Page
7.000	Drive Train	7.1
7.001	Introduction	7.1
7.002	Description	7.1
7.100	Main Rotor Gearbox	7.1
7.110	Main Rotor Gearbox Removal	7.1
7.120	Main Rotor Gearbox Installation	7.3
7.130	Leveling Main Rotor Gearbox	7.5
7.140	A006-5/A908-4 Yoke Removal and Installation	7.7
7.141	Setting Hall Effect Sender Gap	7.7
7.150	Replacement of Main Rotor Gearbox Pinion Seal	7.7
7.155	Replacement of Main Rotor Gearbox Sump O-Ring	7.9
7.160	Main Rotor Gearbox Overtemp Inspection	7.9A
7.170	Main Rotor Gearbox Chip Light Indicator	7.9B
7.180	(Reserved)	
7.200	Clutch Assembly	7.10
7.210	Clutch Assembly Removal	7.10
7.211	A184 Bearing Removal	7.12
7.212	A184 Bearing Installation	7.14
7.213	Clutch Assembly Seal Replacement	7.15
7.214	Clutch Assembly Lubricant Inspection and Servicing	7.16
7.220	Clutch Assembly Installation	7.19
7.230	Clutch Sheave Alignment	7.22
7.240	Clutch Shaft Angle	7.24
7.250	Lateral Clutch Centering	7.24
7.260	A907 Yoke Removal and Installation	7.26
7.270	A195 Yoke Removal and Installation	7.26
7.280	V-Belts	7.27
7.281	V-Belt Removal	7.27
7.282	V-Belt Installation	7.31
7.290	A007 Fanshaft and Bearing Assembly, Starter Ring Gear Support, Lower Sheave and Alternator Belt Replacement	7.33A
7.291	Removal	7.33A
7.292	Installation	7.33A
7.300	Tail Rotor Drive Shaft	7.34

CHAPTER 7

DRIVE TRAIN (Continued)

Section	Title	Page
7.310	Tail Rotor Drive Shaft Removal	7.34
7.320	Tail Rotor Drive Shaft Installation	7.35
7.321	Adjustment of Damper Friction	7.37
7.330	Intermediate Flex Plate Installation and Shimming	7.40
7.340	Checking Tail Rotor Drive Shaft Runout	7.40
7.350	Two-Piece Tail Rotor Drive Shaft	7.44A
7.360	B224-1 Tail Rotor Drive Shaft Corrosion Removal	7.44D
7.400	Tail Rotor Gearbox	7.45
7.410	Tail Rotor Gearbox Removal	7.45
7.420	Tail Rotor Gearbox Installation	7.45
7.430	Tail Rotor Gearbox Shimming	7.46
7.440	Tail Rotor Gearbox Chip Indicator	7.46
7.450	A021 Tail Rotor Gearbox Output Shaft Seal Replacement	7.47
7.460	B021 Tail Rotor Gearbox Output Shaft Seal Replacement	7.48
7.470	B021 Tail Rotor Gearbox Input Shaft Seal Replacement	7.48B
7.500	Actuator Assembly	7.49
7.510	Actuator Removal	7.49
7.520	Actuator Installation	7.49
7.530	Actuator Motor Replacement	7.49
7.540	Actuator Adjustment	7.50
7.550	Switch and Fuse Replacement	7.53
7.551	Switch Replacement	7.53
7.552	Fuse Replacement	7.53
7.600	Rotor Brake	7.54
7.610	Rotor Brake Removal	7.54
7.620	Rotor Brake Installation	7.54
7.630	Rotor Brake Pad Replacement	7.55

CHAPTER 7

DRIVE TRAIN

7.000 Drive Train

7.001 Introduction

This section contains procedures for removal, installation, replacement, and maintenance of drive train components.

7.002 Description (See Figure 7-1)

A steel-coated multiple-grooved aluminum pulley, known as the lower sheave, is bolted directly to the crankshaft. Two banded-pair V-belts transmit power to the anodized aluminum upper sheave; a steel-coated upper sheave is optional. The upper sheave has an overrunning sprag clutch, also known as a freewheeling unit, in its hub through which passes the clutch shaft. The clutch shaft receives power from the sprag clutch and transmits power forward to the main rotor gearbox and aft to the tail rotor driveshaft. Flexible couplings are located at input to the main rotor gearbox and at each end of the long tail rotor driveshaft. The main rotor gearbox contains a single-stage spiral-bevel gear set which is splash-lubricated. The tail rotor driveshaft has no hanger bearings but has a lightly-loaded damper bearing. The tail rotor gearbox also contains a splash-lubricated spiral-bevel gear set. Tail rotor gearbox input and output shafts are made of stainless steel to resist corrosion. Other shafts throughout drive system are made of alloy steel.

7.100 Main Rotor Gearbox

7.110 Main Rotor Gearbox Removal

1. Remove main rotor per §§ 9.111 & 9.121.
2. Remove swashplate per § 8.411.
3. Remove mast fairing and aft cowling.
4. Disconnect rotor brake cable from brake lever.
5. Remove fuel tank(s) per § 12.100. Mark all wires for reassembly.
6. Remove jackshaft and support struts per §§ 8.311 & 8.321.
7. Remove clutch assembly per § 7.210.
8. Disconnect chip detector, Hall Effect senders, rotor brake switch and overtemp sender at quick disconnects. Disconnect ground wire. Mark all wires for reassembly.
9. Remove gearbox cooling hose and nozzle.
10. Remove four main rotor gearbox mounting bolts. Carefully lift gearbox up to clear forward push-pull tubes and remove gearbox (see Figure 7-2).

WARNING

Leveling shims may be installed between gearbox mounts and frame mounting pads. Shims should remain attached to frame, or mark mounting pads with shim thickness for reinstallation.

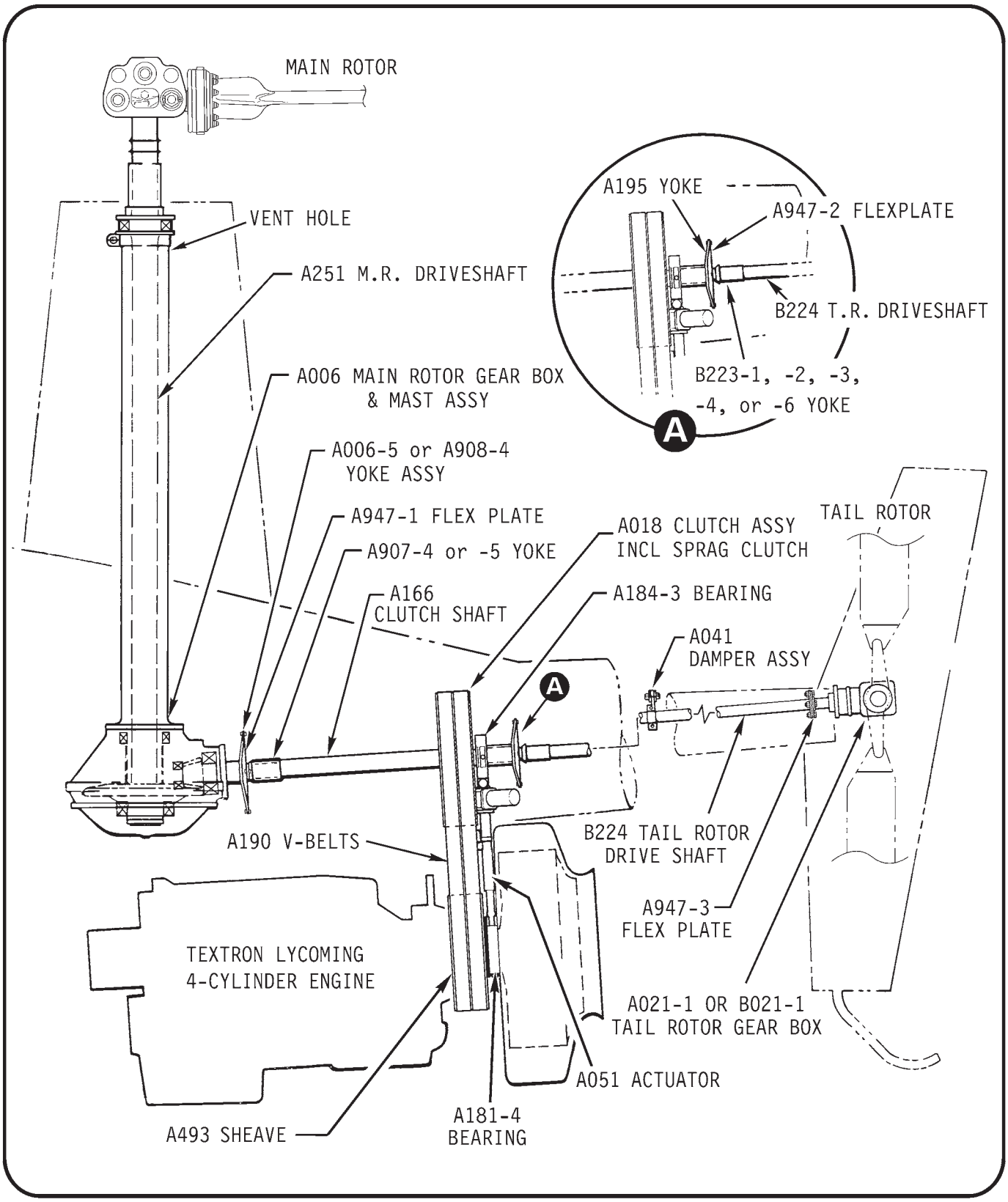

FIGURE 7-1 DRIVE TRAIN

7.120 Main Rotor Gearbox Installation

1. Ensure area is clear for installation of gearbox. One or two other people are needed to help position gearbox.

2. If original shims unknown or a new upper frame has been installed, Level main rotor gearbox mounting pads per Section 7.130. Install proper shims on main rotor gearbox mount pads before gearbox installation. Install main rotor gearbox attach bolts and A650 fittings and torque per Section 1.330.

3. Install clutch assembly per Section 7.220.

4. Install jackshaft support and jackshaft per Sections 8.312 and 8.322.

5. Install main rotor gearbox cooling hose and nozzle.

6. Install fuel tank(s) per Section 12.130 and 12.170.

7. Connect rotor brake cable to brake lever. Torque bolt per Section 1.320 and torque stripe per Figure 2-1. Verify rotor brake switch activates per Figure 7-16A dimension.

8. Connect electrical leads at fuel tank(s) and main rotor gearbox.

9. Install aft cowling and clamp static line.

10. Install fairing lower rib and ensure it is aligned with helicopter's longitudinal axis. Connect pitot tube to pitot line and install mast fairing.

11. Install swashplate assembly per Section 8.412.

12. Install main rotor system per Sections 9.112 and 9.122

13. Refer to Section 1.110 for new or overhauled gearbox servicing instructions.

CAUTION

Prior to operation of a new, overhauled, or repaired gearbox, or if gearbox has ever been laid horizontally, 6 ounces of A257-2 gear oil must be injected into vent hole (see Figure 7-1) on top aft side of mast tube. Gearbox must remain vertical during and after injecting oil. Fill gearbox with oil, via fill port, to level indicated on sight glass decal.

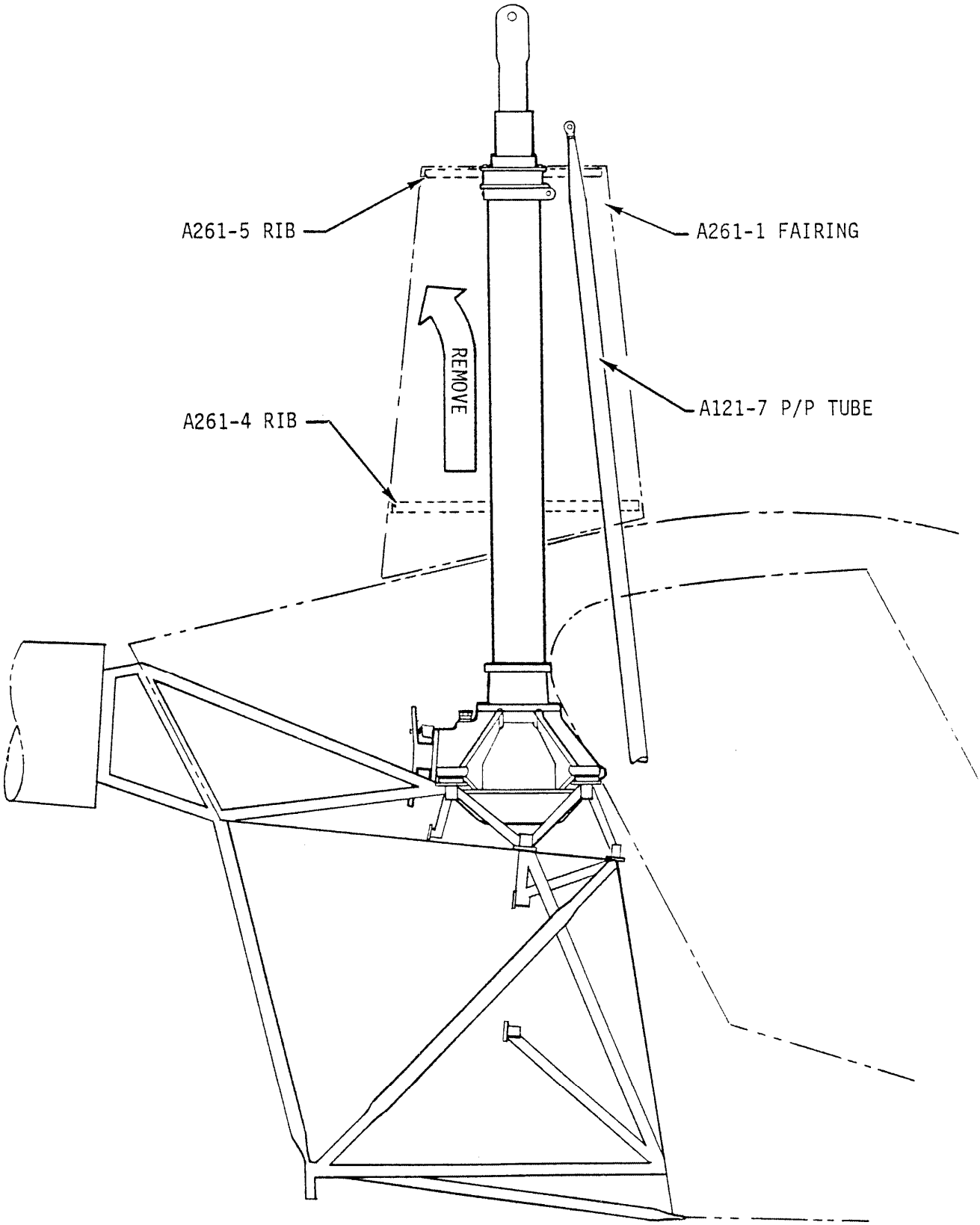

FIGURE 7-2 MAIN ROTOR GEARBOX REMOVAL

7.130 Leveling Main Rotor Gearbox

1. Level aircraft per Section 1.220.c.

2. Place A796 shims as required on upper frame MRGB mounting pads such that a level laid laterally or longitudinally between any two pads indicates ± 0.20° or less. If unable to obtain ± 0.20°, level to within one 0.020 inch thick shim. Maximum six shims per pad.

NOTE
Ensure at least one pad has no shims. As required after leveling, remove equal number of shims from each pad.

3. Install main rotor gearbox per Section 7.120.

Intentionally blank

7.140 A006-5 or A908-4 Yoke Removal and Installation

Yoke Removal:

a) Remove A947-1 flex plate and remove clutch per section 7.210 or support clutch shaft per Figure 7-8.

b) Place a wooden block between horizontal firewall and yoke flange to counteract torque when loosening nut.

c) Remove cotter pin and nut from main rotor gearbox pinion shaft and remove yoke.

Yoke Installation:

a) Install A006-5 or A908-4 yoke on main rotor gearbox pinion shaft. Install A141-10 washer and AN320-8 castellated nut.

b) Torque nut per Section 1.330 and install cotter pin. Place a wood block between yoke flange and horizontal firewall to counteract torque.

c) Install clutch assembly, if removed, and connect forward flex plate per Section 7.220.

WARNING

A193 flex plates, which do not have bonded washers, are obsolete and must be replaced with A947 flex plates having bonded washers. If a bonded washer separates from an A947 flex plate, flex plate is unairworthy and cannot be repaired. Ensure A947-1 forward flex plate is Rev E or subsequent (identified by letter "E" or subsequent letter on two arms of flex plate).

d) Check Hall Effect sender-to-yoke magnet gap per Section 7.141 before run-up or turning blades.

7.141 Setting Hall Effect Sender Gap

Hall Effect sender-to-magnet gap is 0.020 inch ± 0.005 inch. Gap is adjustable by loosening sender jamnuts. Check gaps between bolt magnets at each sender. After setting gap, tighten jamnuts and torque-stripe.

7.150 Replacement of Main Rotor Gearbox Pinion Seal

a) Ensure belt tension actuator is fully disengaged. Disconnect A947-2 intermediate flex plate at tail rotor drive shaft. Note shim location(s) for reinstallation.

b) Remove A947-1 forward flex plate. Note shim location(s) for reinstallation.

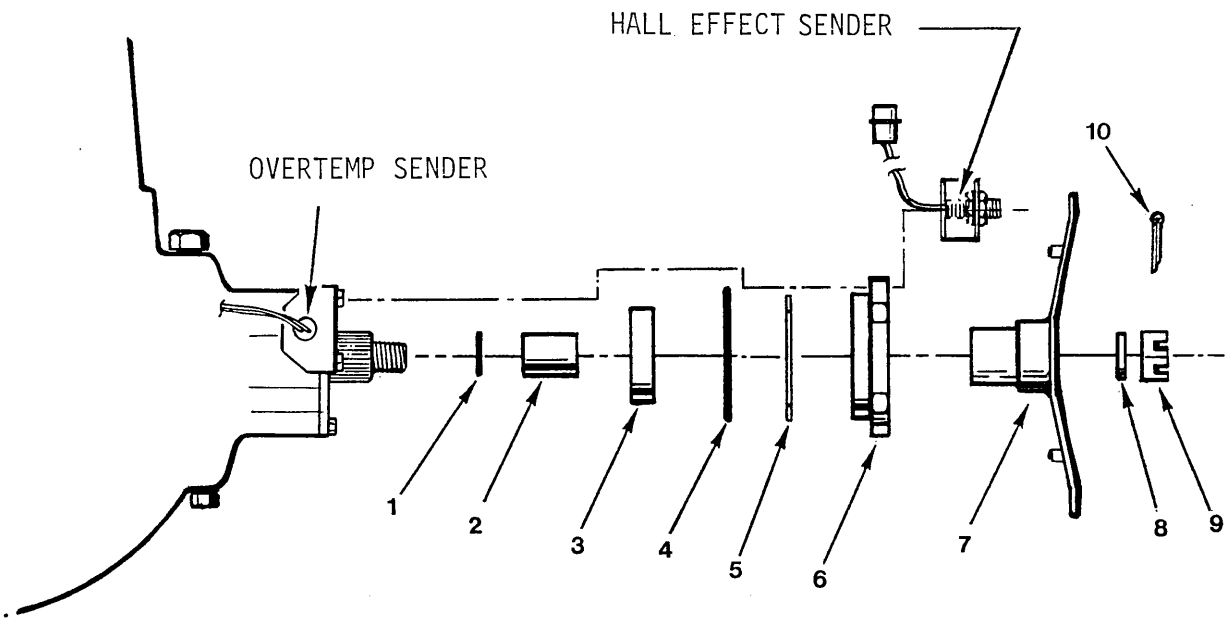

NUMBER	PART NO.	DESCRIPTION
1	A215-024	"O" Ring
2	A266-1	Spacer
3	A966-3	Seal
4	A215-152	"O" Ring
5	A117	Shim
6	A270-1	End Cover
7	A006-5 or A908-4	Yoke
8	A141-10	Washer
9	AN320-8	Nut
10	MS24665-210	Cotter Pin

FIGURE 7-2A MAIN ROTOR GEARBOX SEAL REPLACEMENT

7.150 Replacement of Main Rotor Gearbox Pinion Seal (cont'd)

c) Rest forward end of clutch shaft on firewall. Remove yoke from pinion shaft per Section 7.140.

d) Cut safety wire securing pinion bearing end cover bolts and remove bolts.

e) Remove Hall Effect sender bracket(s) and gearbox overtemp sender bracket.

f) Carefully slide pinion bearing end cover off pinion shaft.

CAUTION

Do not remove shims under pinion bearing end cover as they control bearing preload and gear backlash.

g) Press seal out of bearing end cover and press in new seal until it seats.

NOTE

Open face of seal lip must point toward gearbox.

h) Position bearing end cover on pinion shaft. Install Hall Effect and overtemp sender brackets and remaining end cover bolts.

i) Torque bolts per Section 1.330 and safety wire.

j) Adjust Hall Effect sender gap per Section 7.141.

k) Install A947-1 forward flex plate and connect A947-2 intermediate flex plate, ensuring correct ship placement.

7.155 Replacement of Main Rotor Gearbox (MRGB) Sump O-Ring

a) Drain MRGB.

b) Remove MRGB per Section 7.110.

c) Check and record MRGB gear backlash at and tangental to a gear tooth, accessible via sight gage or filler plug hole.

d) Carefully note and record position of each fastener, washer and shim stack-up at all A263-1 sump-to-A264-1 housing attach points (an equal number of shims is installed between sump and housing at each attach point). Remove, identify and retain fasteners, washers and shims.

e) Remove sump and o-ring.

f) Prelubricate new A214-172 o-ring with A257-2 oil and install on sump. Ensure o-ring is not twisted in sump groove.

7.155 Replacement of Main Rotor Gearbox (MRGB) Sump O-Ring (cont'd)

g) Carefully assemble sump to housing and secure finger-tight with fasteners, washers and shims installed in same positions recorded in step d).

NOTE

Install ground wires under nut located aft of forward right mount.

CAUTION

Verify all sump bolts have same shim stack as noted during removal.

h) Torque fasteners as follows:

Eight nuts on AN4 bolts:	90 in.-lb (incl nut self-lock torque)
Two MS20074 cap screws:	60 in.-lb and safety wire
A7260 chip det. housing:	150 in.-lb and safety wire
A7260 chip detector:	75 in.-lb and safety wire

i) Check MRGB gear backlash exactly as performed in step c). Backlash should be within 0.001 inch of value recorded in step c).

j) Install MRGB per Section 7.120.

k) Fill MRGB with A257-2 lubricant.

7.160 Main Rotor Gearbox Overtemp Inspection

a) If "MR TEMP" warning light illuminates AND Telatemp indicates abnormally high operating temperature:

1. Inspect gearbox cooling duct for obstructions and conditions. Clear obstructions or replace duct as required.

2. Remove chip detector and inspect for chips. Return gearbox to RHC if chips are found.

3. Drain gearbox oil and remove sight gage and filler plug. Observe gear tooth surfaces thru filler plug and sight gage holes while rotating gearbox pinion and inspect for damage. Return gearbox to RHC if damage is detected or if gearbox does not rotate smoothly. If no damage is noted, refill gearbox.

4. Replace Telatemp. Ensure old Telatemp adhesive is removed and new Telatemp makes good contact with gearbox.

5. If gearbox overtemp indications continue, return gearbox to RHC.

7.160 Main Rotor Gearbox Overtemp Inspection (cont'd)

b) If "MR TEMP" warning light illuminates but Telatemp indicates normal operating temperature, replace gearbox overtemp sender and perform steps a) 1, 2, & 5 above.

c) If Telatemp indicates 240°F/116°C but "MR TEMP" warning light does not illuminate, test "MR TEMP" warning circuit and perform steps a) 1, 2, 4, & 5 above.

NOTE

Light illuminates at 240 ± 5°F.

7.170 Main Rotor Gearbox Chip Light Indicator

If "MR CHIP" light illuminates:

a) Drain and flush gearbox per Section 1.120 except strain oil (a paint filter works well) while draining and examine any particles found in oil or on chip detector.

b) Particles larger than 0.12 inch long or 0.02 inch wide are cause for concern and should be identified as ferrous or non-ferrous with a magnet. If particles are ferrous return main rotor gearbox to RHC for repair along with particles. If particles are non-ferrous, drain and flush gearbox per Section 1.120.

c) If "MR CHIP" illuminates again within next 100 hours time-in-service a gearbox failure may be imminent. Return gearbox to RHC for repair.

7.180 (Reserved)

7.200 CLUTCH ASSEMBLY

7.210 Clutch Assembly Removal

1. Remove A947-2 intermediate flex plate.

2. Turn Master Battery switch on and disengage clutch switch. Adjust actuator down-limit stop screw (see Figure 7-15) for maximum drive belt slack. Turn Master Battery switch off.

CAUTION

Belt tension actuator must be fully disengaged prior to removing clutch assembly.

3. Disconnect A947-1 forward flex plate.

WARNING

A193 flex plates, which do not have bonded washers, are obsolete and must be replaced with A947 flex plates having bonded washers. If a bonded washer separates from an A947 flex plate, flex plate is unairworthy and cannot be repaired.

4. Disconnect A184 upper actuator bearing assembly from actuator.

5. Disconnect clutch lateral centering strut from upper frame.

6. Disconnect actuator wiring.

7. Pivot actuator to right. Lower clutch to allow drive belt removal.

CAUTION

Mark drive belt fore and aft positions and direction of rotation per Figure 7-8 if reinstalling drive belts.

8. Remove drive belts from clutch and remove clutch per Figure 7-3.

9. When returning clutch to RHC, remove and retain both yokes, centering strut, and attaching hardware.

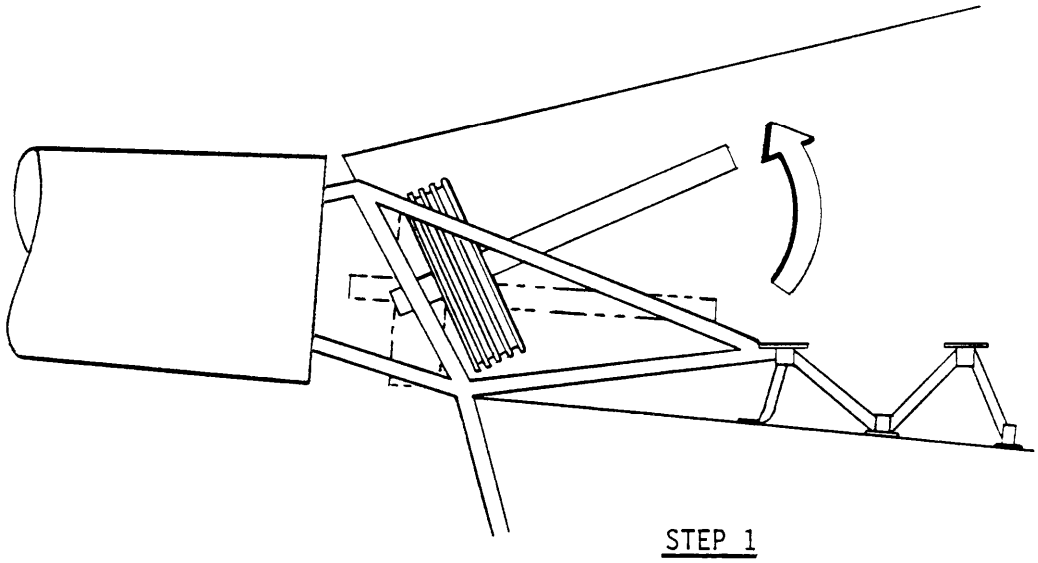

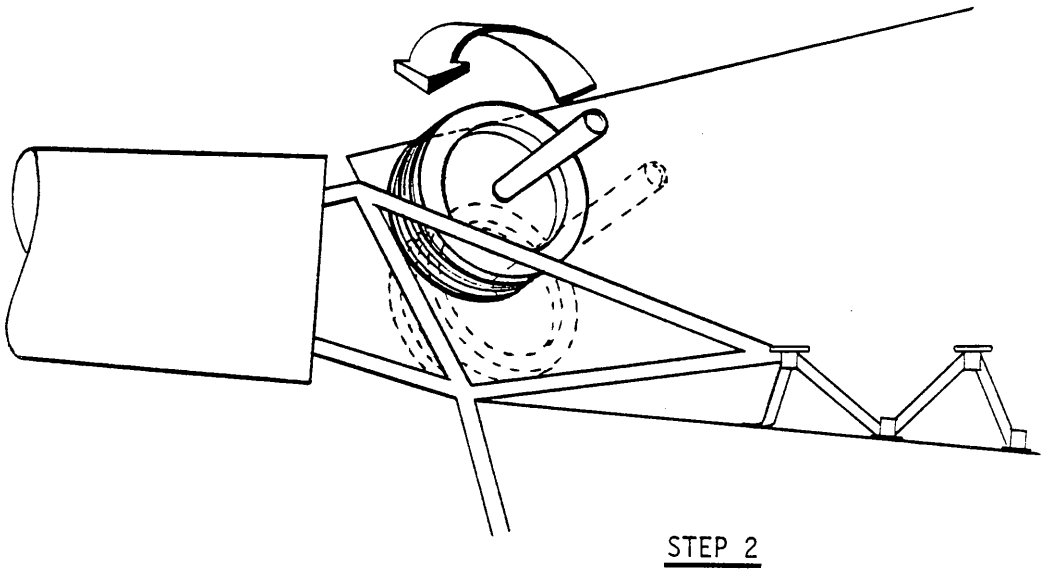

FIGURE 7-3 CLUTCH REMOVAL

7.211 A184 Bearing Removal

a. Refer to Figures 7-3A and 7-3B. Remove A184 bearing:

1. If a press is available, assemble MT303-5 lower puller assembly between A184 bearing and upper sheave per Figure 7-3A. Press clutch shaft out of bearing.

CAUTION

Ensure A018 assembly does not fall when bearing is removed.

2. If press is not available, assemble MT303-2 upper puller assembly with MT303-5 lower puller assembly on clutch per Figure 7-3B. Install MT303-16 plug in short end of clutch shaft and secure with MT303-13 pin. Ensure extractor bolt threads are lubricated with anti-seize. Remove bearing by holding handle and tightening extractor bolt.

WARNING

A647-4 bearing in A184-3 upper bearing assembly has internal clearance modified by RHC. **DO NOT SUBSTITUTE**.

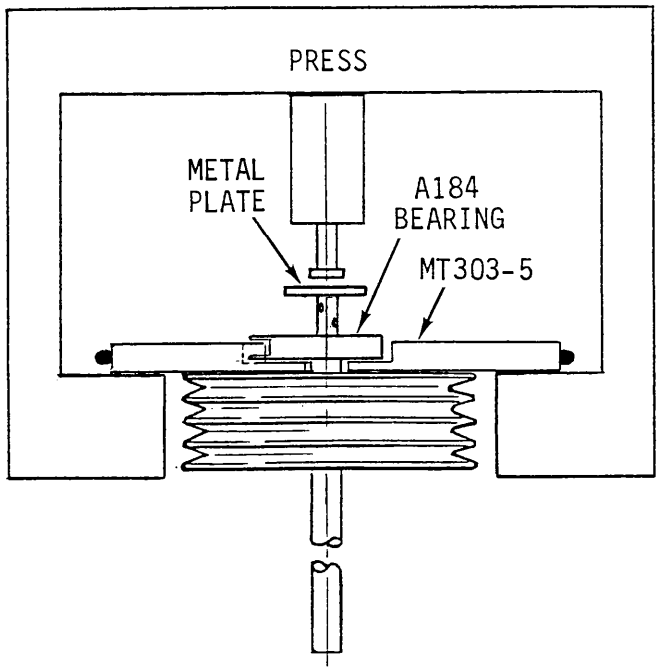

FIGURE 7-3A

Removing A184 Bearing in shop using hydraulic press and MT303-5 Lower Puller Assembly.

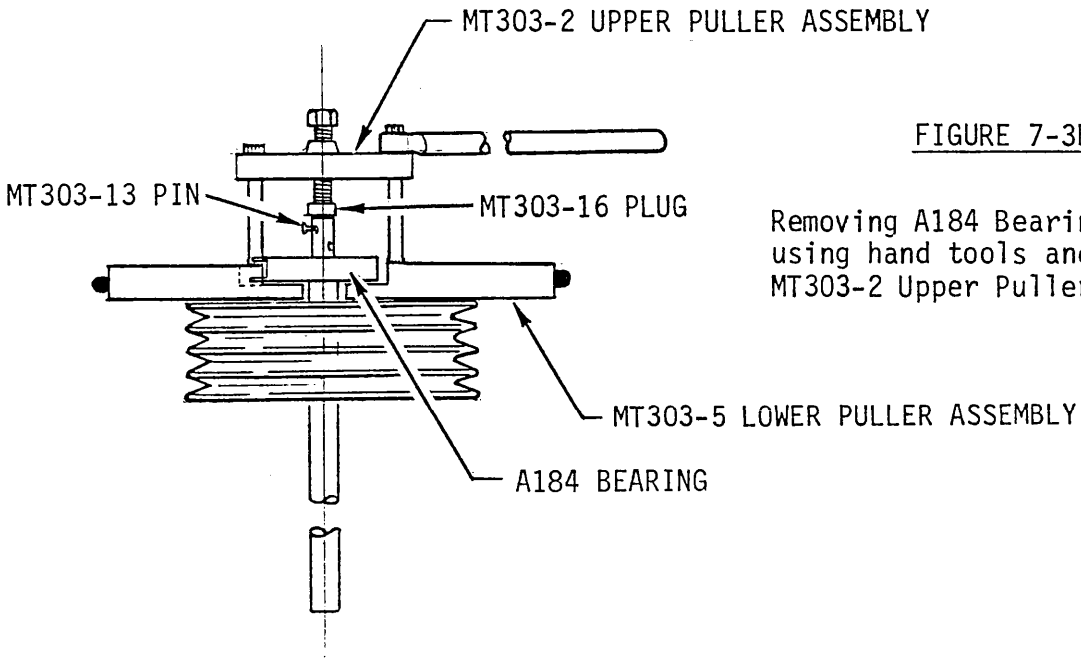

FIGURE 7-3B

Removing A184 Bearing in field using hand tools and MT303-5 and MT303-2 Upper Puller Assembly.

7.212 A184 Bearing Installation

1. Remove loose paint and clean mating area on shaft.

2. Heat A184 bearing assembly. A heat lamp placed one foot from bearing may be used. Ensure temperature of bearing does not exceed 180° F by monitoring Telatemp installed on bearing.

3. Apply zinc-chromate or epoxy primer, or B270-10 adhesive, to bearing mating area of shaft. While primer or adhesive is still wet, install bearing on clutch shaft:

NOTE

Ensure bearing is installed with lateral centering strut attachment ear to left side and actuator attachment on bottom per Figure 7-3F.

I. If press is available: If installed, remove A907 forward yoke. Position MT303-19 tube against A184 bearing assembly inner race and press assembly onto clutch shaft per Figure 7-3E until bearing is at dimension shown in Figure 7-3D.

CAUTION

Do **NOT** support clutch assembly by sheave while pressing or internal bearing will be damaged.

Do **NOT** press bearing beyond dimension shown in Figure 7-3D.

II. If press is not available: Install MT303-4 bearing press assembly and handle from MT303-2 upper puller assembly per Figure 7-3G. Lubricate threaded shaft portion of MT303-4 bearing press assembly with anti-seize compound then insert drilled end into clutch shaft. Align clutch shaft holes with threaded shaft hole and insert MT303-13 pin. Hold handle and tighten nut on MT303-4 bearing press assembly until bearing is at dimension shown in Figure 7-3D.

4. Remove bearing press tooling.

5. Check bearing for smooth operation.

6. Seal bearing inner race-to-shaft juncture with primer to minimize corrosion.

7. Torque stripe inner race of bearing to clutch shaft two places, 180° apart.

8. Install new Telatemp on A184 bearing housing if original was altered by heating.

7.213 Clutch Assembly Seal Replacement

1. Remove clutch assembly per § 7.210.
2. If replacing aft seal, remove A184-3 bearing assembly from clutch shaft per § 7.211. Remove loose paint and clean shaft.

> NOTE
>
> Orient clutch assembly vertically with leaking seal up.

3. Remove inner circle of six (6) bolts from leaking seal retainer.
   a. If seal retainer is circular with two opposing half-moon-shaped cutouts: Remove four (4) bolts in outer row, but not two (2) bolts with large-area washers (which holds inner clutch assembly together).

> NOTE
>
> DO NOT REMOVE two bolts holding the inner clutch assembly together. Further disassembly is not approved.

   b. If seal retainer has two socket-head cap screws: Remove six bolts in outer row, and two socket-head cap screws.
4. Lift retainer plate with seal off shaft per Figure 7-3C. Remove exposed O-ring from clutch housing and discard.
5. Press damaged seal out of retainer.
6. Measure retainer seal bore. If bore measures over 1.687 inches, retainer must be replaced.
7. For "National" brand seals coat seal bore of retainer with B270-3 sealant and press seal in at room temperature. For "CR" brand seal with green coating on seal outer diameter, heat retainer to 150°F and press seal in dry. Press new seal into retainer flush with outside lip.
8. Fill sprag and bearing cavity with A257-4 oil until oil level is flush with top of bearing races (see Figure 7-3D). Rotate shaft while filling to ensure complete filling of inner shaft and sprag assembly.
9. Lightly lubricate new O-ring with A257-4 oil and place it in clutch housing groove.
10. Lightly lubricate seal inner lip with A257-4 oil and slide retainer over shaft.
11. a. If seal retainer is circular with two opposing half-moon shaped cutouts: Position retainer so cut outs fit over two (2) A141-14 washers holding clutch assembly together. Install six (6) inner and remaining four (4) outer bolts in retainers with heads toward shorter end of clutch shaft.
    b. If seal retainer has provisions for two socket-head cap screws: Install cap screws with washers and tighten only enough to clamp retainer to O-ring. Install six inner and six outer bolts with heads toward shorter end of clutch shaft.
12. Using a criss-cross pattern, torque nuts per § 1.320 and torque stripe.
13. If installed, fully tighten cap screws and torque stripe.
14. If removed, install A184-3 bearing assembly per § 7.212.
15. Install clutch assembly per § 7.220.

7.214 Clutch Assembly Lubricant Inspection and Servicing

A. Clutch Assemblies with A168-4 (Forward) Retainer

WARNING

Avoid contaminating drive belts and sheaves with lubricant. Clean contaminated surfaces with mild soap and water solution, followed by a warm water rinse. Place a clean, absorbent rag beneath MT147-2 fittings, when installed, to catch any drips.

1. Open main rotor gearbox compartment access doors.
2. Rotate clutch shaft until bolts securing yokes to shaft are vertical. Engage rotor brake.
3. Remove A168-4 (forward) retainer's top B289-3 screw and install clean MT147-2 fitting. Attach drain hose.
4. Rotate sheave until fitting and attached drain hose are on bottom. Route drain hose into a suitable, clean container. Remove top B289-3 screw and allow lubricant to drain into container.
5. Install second clean MT147-2 fitting at top of retainer and connect a clean supply of A257-4 lubricant to fitting. Flush sprag clutch housing until exiting lubricant is obviously red. Disconnect lubricant supply and allow lubricant to drain completely into container.
6. Strain all lubricant from container through a 180-200 micron paint filter/strainer. Fluid may be dark, and may sparkle with very fine metallic debris; this is normal. If metallic debris is trapped in the filter/strainer, remove clutch assembly and return it to RHC, or an R22 Service Center authorized to overhaul clutch assemblies, for disassembly and inspection.
7. If metallic debris is not found in the filter, attach drain hose to top fitting. Route drain hose into a suitable container. Connect a clean supply of A257-4 lubricant to bottom fitting. Fill sprag clutch housing thru bottom fitting until no air bubbles are visible in drain hose. Shut-off fluid flow.
8. Remove top fitting and install screw. Rotate sheave until opposite fitting is on top. Remove fitting and verify lubricant level contacts threads; add lubricant as required. Install forward screw.
9. Close main rotor gearbox compartment access doors.

B. Clutch Assemblies with Retainer without B289-3 Screws

1. Perform clutch assembly (aft) seal replacement per Section 7.213.

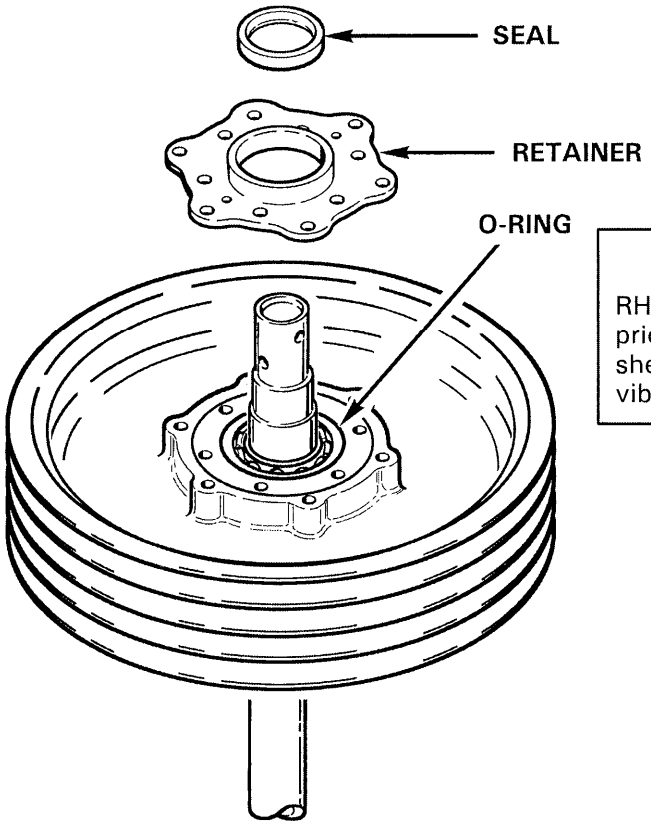

FIGURE 7-3C

CAUTION

RHC does not recommend using A170-1 or -2 Revision N or prior upper sheaves with A493-1 Revision T or later lower sheaves. Such combinations may cause excessive drive belt vibration. Refer to Figure 2-9.

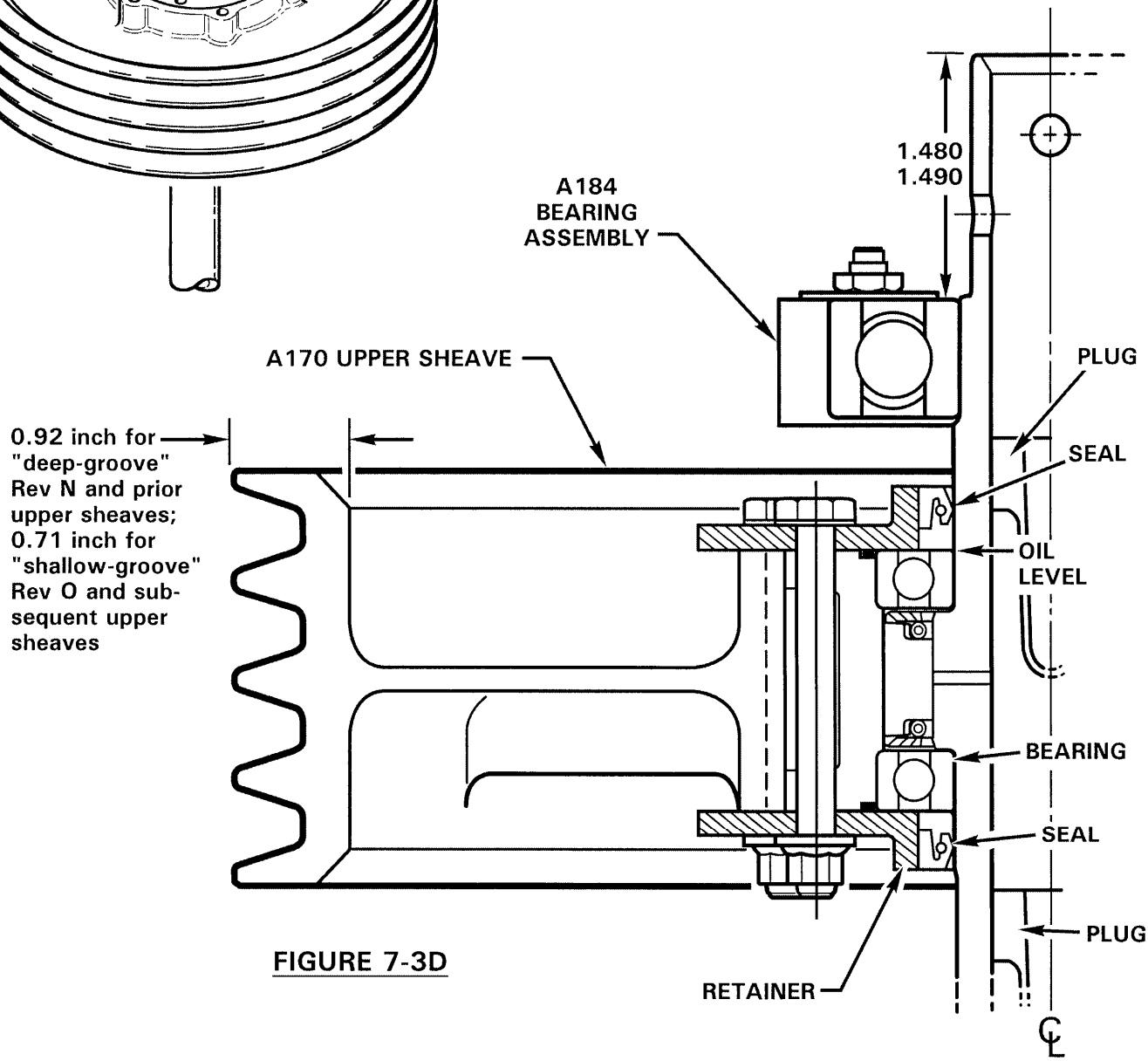

FIGURE 7-3D

FIGURE 7-3E

INSTALLING A184 BEARING USING MT303-19 BEARING PRESSING TOOL

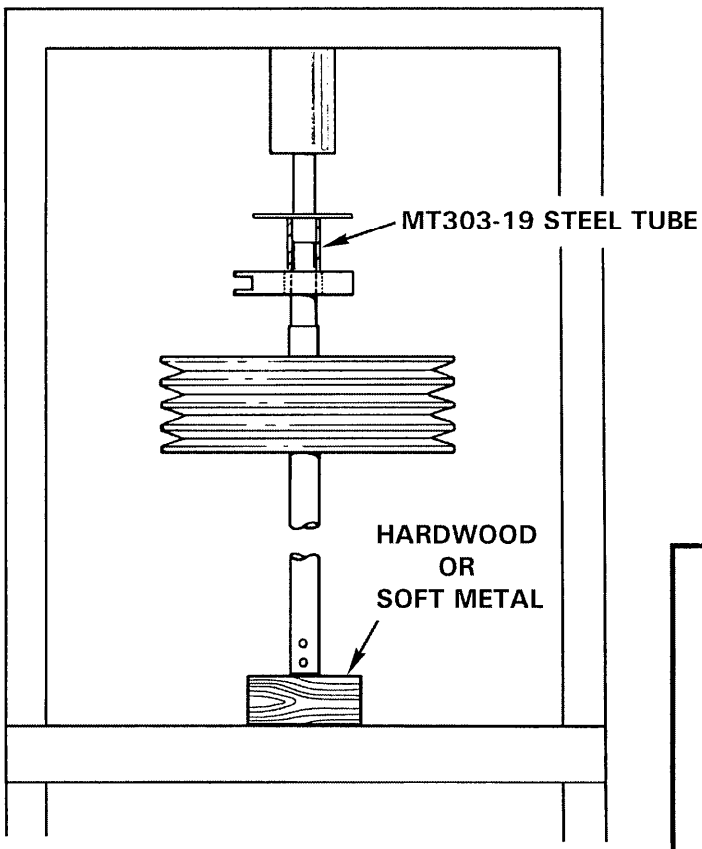

WARNING

Do not press across sheave or bearings will be damaged.

FIGURE 7-3F

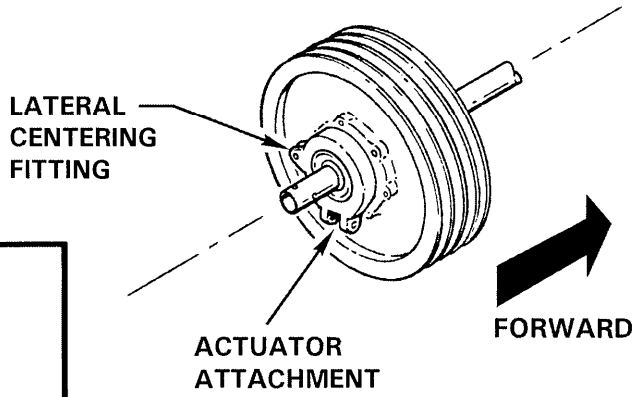

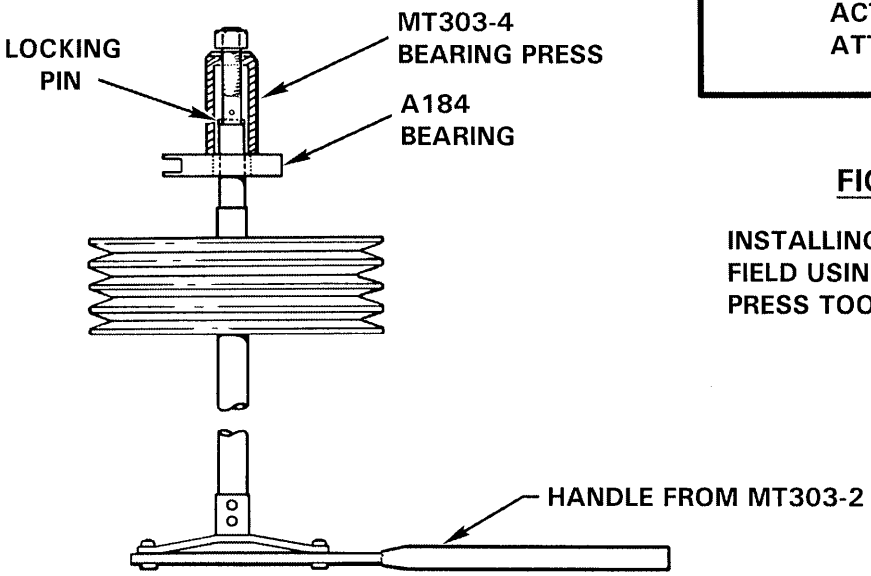

FIGURE 7-3G

INSTALLING A184 BEARING IN THE FIELD USING MT303-4 BEARING PRESS TOOL

7.220 Clutch Assembly Installation

1. If removed, install A195 and/or A907 yokes per Sections 7.260 & 7.270.

2. If removed, connect clutch lateral centering strut to A184 bearing assembly and torque fasteners per Section 1.320.

3. Ensure actuator is fully disengaged.

4. Identify type (deep-groove or shallow-groove) of upper and lower sheaves. Refer to Figures 7-3D & 2-11.

CAUTION

RHC does not recommend using A170-1 or -2 Revision N or prior upper sheaves with A493-1 Revision T or later lower sheaves. Such combinations may cause excessive drive belt vibration.

5. Install clutch assembly and pull belts over clutch aft yoke. Install belts in proper fore/aft order with proper direction of rotation.

6. Refer to Figure 7-14. Attach clutch assembly to clutch actuator. Torque fasteners per Section 1.320.

7. Refer to Figure 7-4. Install A947-1 flex plate. Torque fasteners per Section 1.320.

WARNING

A193 flex plates, which do not have bonded washers, are obsolete and must be replaced with A947 flex plates having bonded washers. If a bonded washer separates from an A947 flex plate, flex plate is unairworthy and cannot be repaired. A947-1 flex plate must be marked with letter "E" (or subsequent letter) on two adjacent arms.

8. Connect clutch lateral centering strut from clutch assembly to upper frame. Torque fasteners per Section 1.320.

9. Check clutch sheave alignment per Section 7.230 and adjust as required.

10. Install A947-2 intermediate flex plate per Section 7.330.

11. Adjust actuator down-limit stop screw (see Figure 7-15) for V-belt deflection shown in Figure 7-7A.

12. Perform run-up per Section 2.210.1. Adjust actuator down-limit stop screw as required and tighten down-limit stop screw jam nut.

13. Torque stripe fasteners per Figure 2-1.

7.220 Clutch Assembly Installation (cont'd)

NUMBER	DESCRIPTION
1	Palnut
2	Nut
3	Washer
4	Yoke
5	Bolt
6	Flex Plate
7	Bolt
8	Bolt
9	Block
10	Yoke
11	Clutch Assembly
12	Block
13	Tail Rotor Drive Shaft (OBSOLETE- see IPC for current replacement parts)
14	Washer
15	Washer (As Required)
16	Bearing Assembly
17	Palnut
18	Nut
19	Washer
20	Yoke
21	Flex Plate
22	Flex Plate (OBSOLETE- see IPC for current replacement part)
23	Nickle-plated Washer (OBSOLETE-see IPC for current replacement part)
24	Flex Plate (OBSOLETE-see IPC for current replacement part)
25	Nickle-plated Washer (OBSOLETE-see IPC for current replacement part)
26	Washer (See Section 7.230)
27	Washer (See Section 7.330)
28	Yoke (See Section 7.350)
29	Tail Rotor Drive Shaft Assembly
30	Block
31	Block
32	Bolt
33	Strut Assembly, Lateral Clutch Centering

7.220 Clutch Assembly Installation (cont'd)

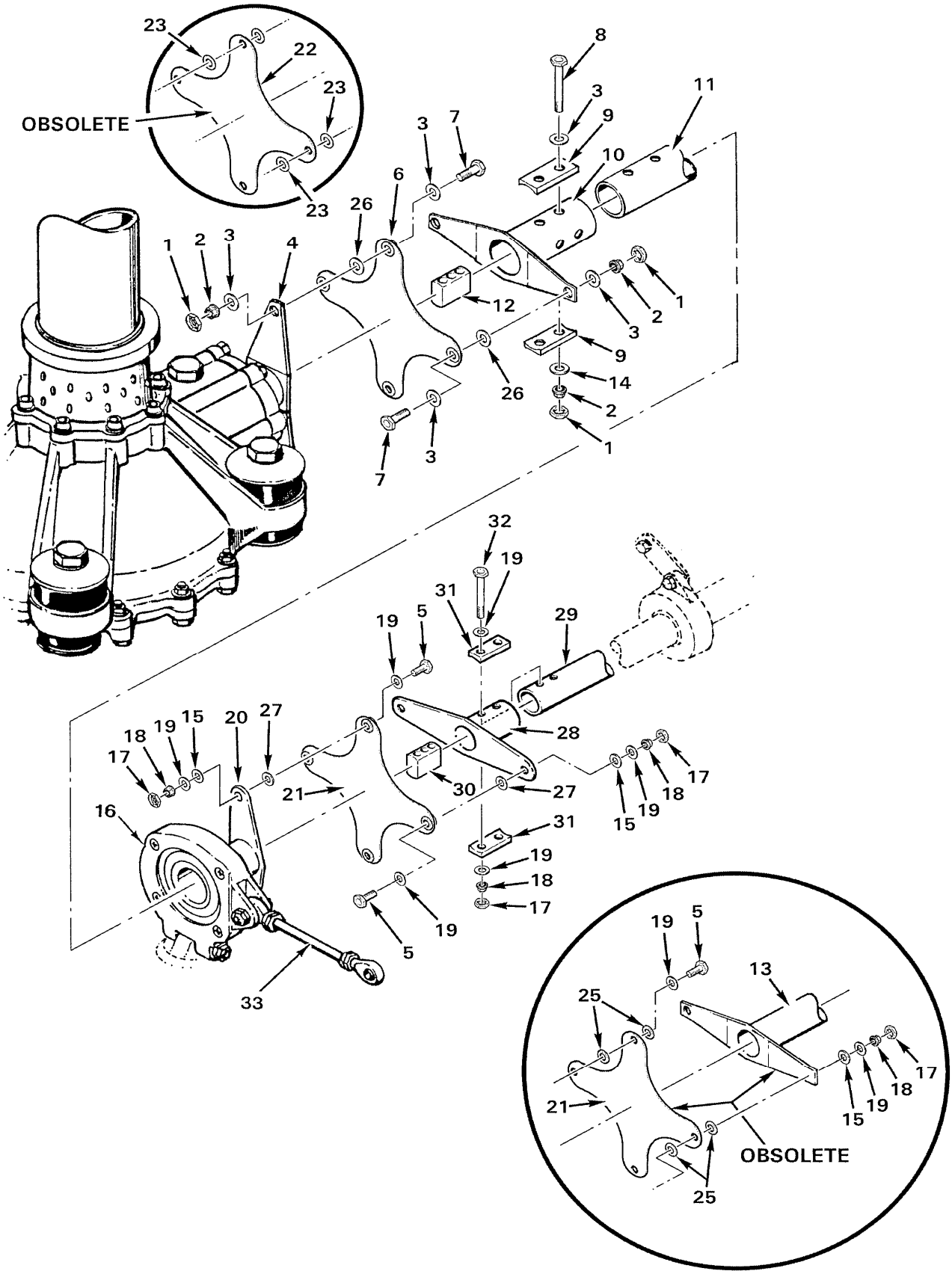

FIGURE 7-4 FORWARD AND INTERMEDIATE FLEXPLATE INSTALLATION

7.230 Clutch Sheave Alignment

1. Check engine shimming installation limits per Section 6.130. Ring-gear-to-frame dimension must be within specified limits before sheave alignment is checked.

2. Engage clutch (fan and scroll must be installed).

3. Check clutch shaft angle per Section 7.240.

4. Hold MT331-4 Sheave Alignment Bar against aft face of lower sheave extending bar upward to horizontal center line of clutch assembly upper sheave.

5. Measure left and right gaps per Figure 7-5. Both gaps must be within noted limits and left gap must be 0.010/0.030 inch larger than right gap. If left gap is not 0.010/0.030 inch larger than right gap, adjust clutch lateral centering per Section 7.250 or adjust engine shims.

   If either gap exceeds maximum limit, clutch assembly is too far forward or engine is too far aft. Engine may be moved forward by removing an equal amount of shims from each engine mount, subject to Section 6.130 minimum shim requirement. Alternatively, the clutch assembly may be moved aft by shimming at forward flex plate and/or adjusting A907 yoke length. Shimming is accomplished by installing a maximum of one AN960-516L washer between A947-1 flex plate and both arms of A907 and/or A908 yoke; AN960-516L washers installed on either yoke will decrease right and left gaps an amount equal to the washer's thickness. A907-4 and -5 yokes each have two sets of mounting holes which change effective yoke length by 0.120 inch. A907-5 yoke is 0.120 inch or 0.240 inch longer than long position of A907-4 yoke, depending on mounting holes used. Right and left gaps will decrease by 0.120 inch with each 0.120 inch increase in A907 yoke length.

   If either gap is smaller than minimum limit, clutch assembly is too far aft or engine is too far forward. Engine may be moved aft by adding an equal amount of shims to each engine mount, subject to Section 6.130 maximum shim allowance. Alternatively, clutch assembly may be moved forward by removing shims (if installed) at forward flex plate and/or adjusting A907 yoke length. Removing AN960-516L washers from between A947-1 flex plate and both arms of A907 and/or A908 yoke will increase both gaps an amount equal to washer's thickness. A907-4 and -5 yokes each have two sets of mounting holes which change effective yoke length by 0.120 inch. A907-4 yoke is 0.120 inch or 0.240 inch shorter than short position of A907-5 yoke, depending on mounting holes used. Right and left gaps will each increase by 0.120 inch with each 0.120 inch decrease in A907 yoke length.

CAUTION

Disengage clutch prior to shimming A947-1 flex plate.

A907-4 yoke replaces A907-1 and -2 yokes. A907-5 yoke replaces A907-3 yoke and includes an additional set of mounting holes.

7.230 Clutch Sheave Alignment (cont'd)

6. Check intermediate flex plate shimming per Section 7.330 if shims were added or removed at A947-1 flex plate or if A907 yoke position changed.

7. Adjust V-belt guide per Figure 7-8A.

8. Check throttle correlation rigging per Section 10.150 and adjust as required.

NOTE

Shortening clutch lateral centering strut simultaneously increases left gap and decreases right gap. Lengthening clutch lateral centering strut decreases left gap and increases right gap.

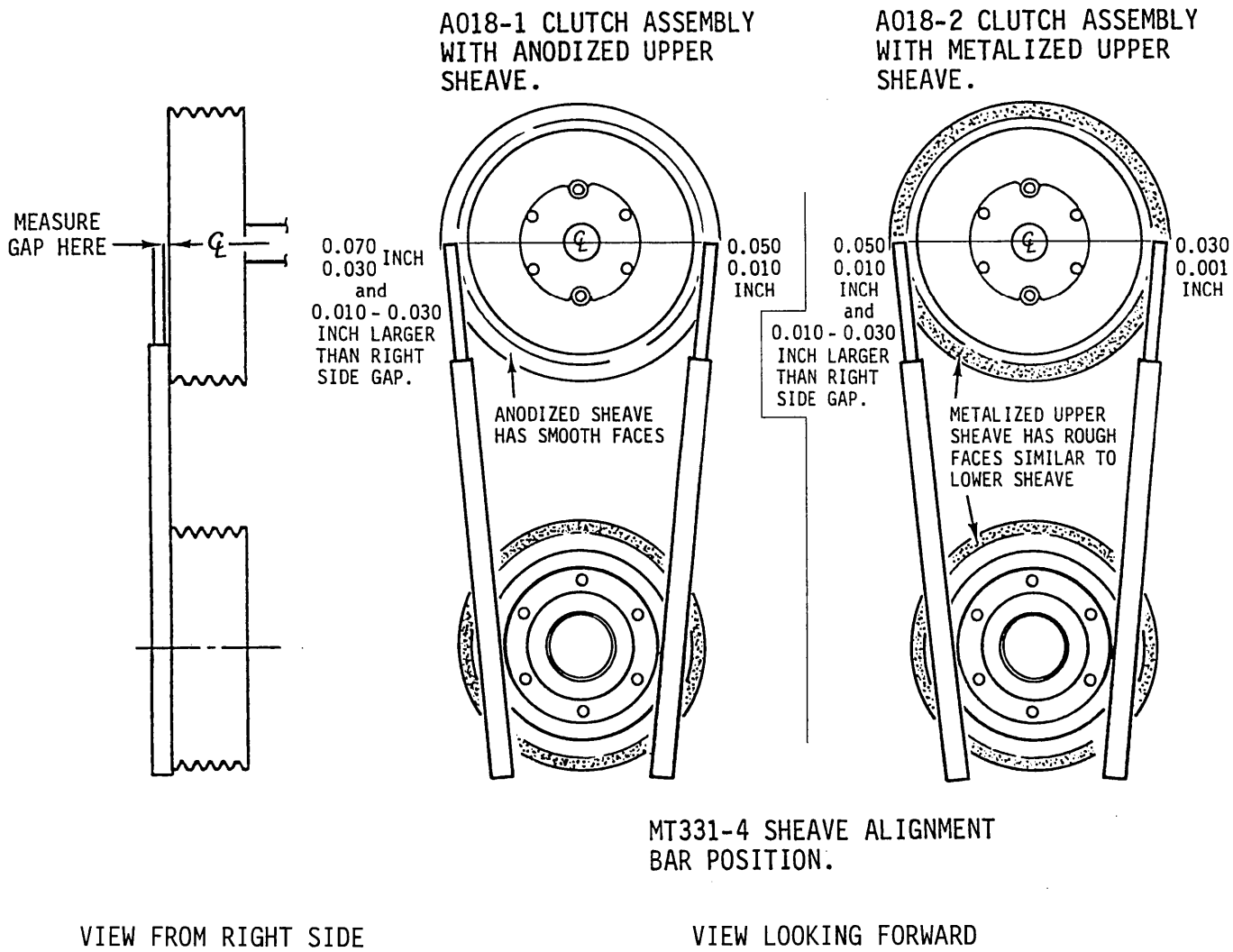

FIGURE 7-5 SHEAVE ALIGNMENT

7.240 Clutch Shaft Angle

Verify correct engine shimming per Section 6.130 prior to checking clutch shaft angle.

1. See Figure 7-6. Orient main rotor blades perpendicular to centerline of helicopter. Position protractor atop main rotor hub facing right side of helicopter as shown. Zero protractor to main rotor hub.

2. Turn master switch on and engage clutch. Check angle of clutch shaft per Figure 7-6.

3. Clutch shaft angle limits with clutch engaged are 2.5 to 5.0 degrees.

   Flex plate has zero vertical misalignment when angle is 3.5 degrees. If clutch shaft angle is not within limits, drive V-belts must be replaced.

7.250 Clutch Lateral Centering

1. Clutch actuator fully engaged.

2. Check sheave alignment on left and right side per Figure 7-5.

3. To facilitate sheave alignment, left gap should be 0.010 to 0.030 inch larger than right gap. Clutch lateral centering strut may be adjusted (with clutch engaged) to obtain gap differential provided following clearances are met:

   a. Minimum 0.030 inch between clutch actuator motor and upper frame tube.

   b. Minimum 0.150 inch between V-belts and right side frame guard (actuator engaged).

4. If alignment cannot be adjusted within required measurements, contact Robinson Helicopter Company Technical Support.

5. Torque attach bolts and jamnuts per Section 1.320.

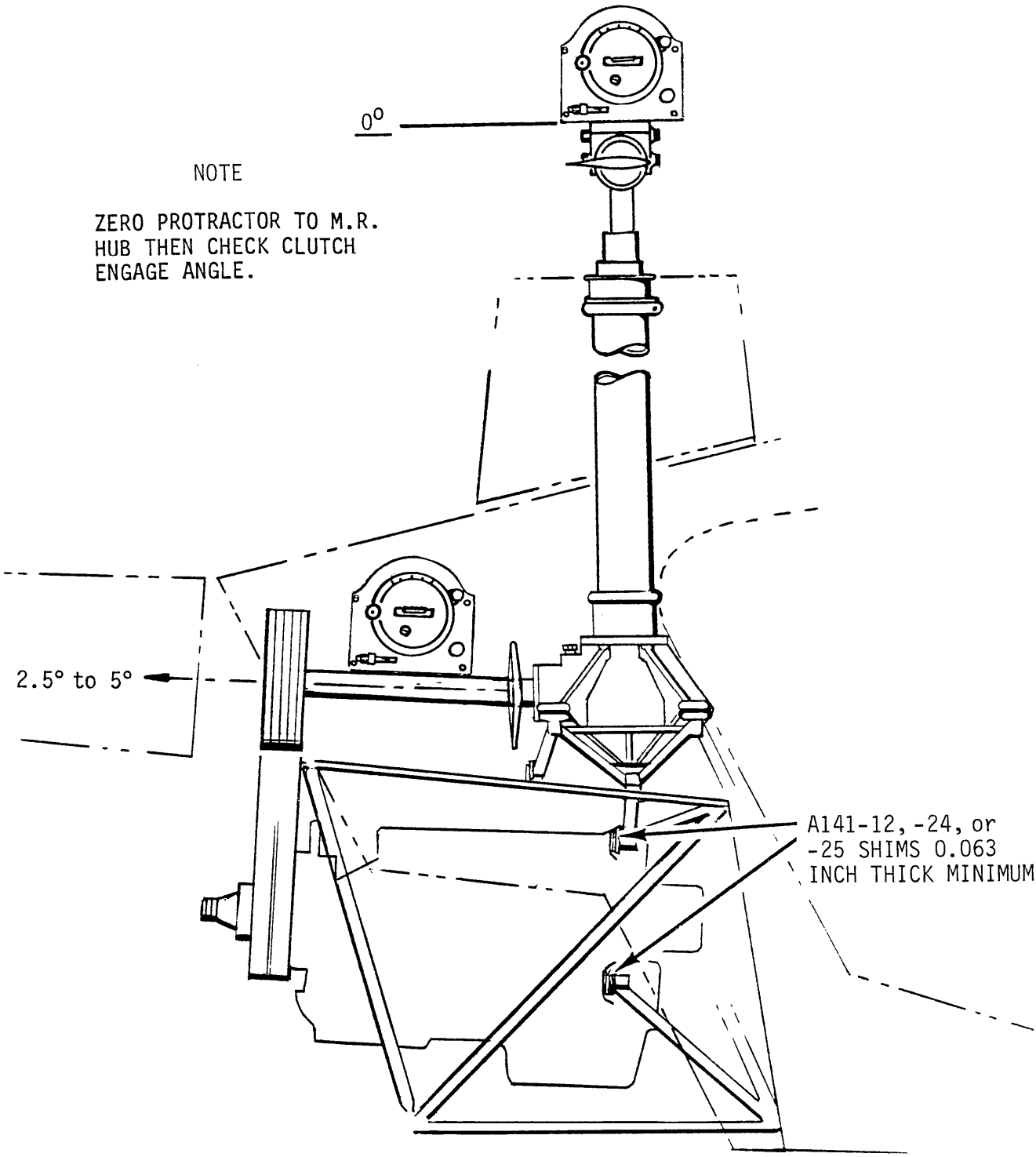

FIGURE 7-6 MEASURING CLUTCH SHAFT ANGLE

7.260 A907 Yoke Removal and Installation

To remove yoke:

1. Remove clutch assembly per Section 7.210.
2. Remove bolts and clamping blocks securing A907 yoke to clutch shaft. Mark which set of yoke attachment holes are used.
3. Remove A907 yoke:
   a. (Preferred method) If a press is available, position clutch assembly in press per Figure 7-6A. Ensure brass or aluminum drift fits against outer rim of clutch shaft and not against inner spacer. Press clutch shaft out of yoke.

   CAUTION

   Ensure clutch assembly does not fall when yoke is removed.

   b. If a press is not available, apply penetrating oil to yoke-shaft juncture. Gently clamp A907 yoke in a padded vise per Figure 7-6B. Twist clutch shaft out of yoke by turning upper sheave. If difficulty is encountered, discontinue attempt and arrange use of press as described in preceding step.

   CAUTION

   Avoid bending loads on clutch shaft when A907 yoke is clamped in vise as yoke can be damaged.

To install yoke:

1. Remove paint from and clean mating area on clutch shaft.
2. Remove paint from A907 yoke bore, from A907 yoke exterior at clamping block attachment areas, and from clamping surfaces of clamping blocks.
3. Coat A907 yoke bore and mating portion of clutch shaft with Section 1.450-approved zinc-chromate or epoxy primer. While primer is still wet, install yoke on clutch shaft and align marked holes on yoke (if applicable) with clutch shaft holes.

   CAUTION

   Use only specified primers to install yoke; do not use any other lubricants.

4. While yoke primer is still wet, secure yoke to shaft with clamping blocks coated with approved zinc-chromate or epoxy primer and bolts. Torque bolts per Section 1.320. Install palnuts and torque per Section 1.320.
5. Clean all exposed bare metal fasteners and joints, and prime with zinc-chromate or epoxy primer. Ensure formation of primer fillets at all joints for sealing out moisture.
6. Torque stripe fasteners.

7.270 A195 Yoke Removal and Installation

1. Remove clutch assembly per Section 7.210.

2. Remove bolts and clamping blocks securing A195 yoke to clutch shaft.

> **CAUTION**
>
> A195 yoke arms are easily bent. Exercise care when removing or installing yoke. Always remove A195 yoke when shipping or transporting clutch assembly.

3. Remove A195 yoke:

   a. If a press is available, assemble MT303-5 lower puller assembly around clutch shaft between A184 bearing and A195 yoke. Flat face of puller must be towards yoke. Refer to Figure 7-6C. Insert MT303-16 plug thru A195 yoke bore into clutch shaft and press shaft out of yoke.

   b. If a press is not available, assemble MT303-5 lower puller assembly with MT303-2 upper puller assembly per Figure 7-6C. Flat face of puller must be towards yoke. Insert MT303-16 plug thru A195 yoke bore into clutch shaft. Place a deep socket (or similar) between MT303-16 plug and extractor bolt. Tighten bolt and remove A195 yoke.

To install yoke:

1. Remove paint from and clean mating area on shaft.
2. Remove paint from A195 yoke bore, from A195 yoke exterior at clamping block attachment areas, and clamping surfaces of clamping blocks.
3. Coat inside of A195 yoke and mating portion of clutch shaft with Section 1.450-approved zinc chromate or epoxy primer. While primer is still wet, slide A195 yoke onto clutch shaft and align mounting holes.
4. While yoke primer is still wet, secure yoke to shaft with clamping blocks coated with approved zinc-chromate or epoxy primer and bolts. Torque bolts per Section 1.320. Install palnuts and torque per Section 1.320.
5. Clean all exposed bare metal fasteners and joints, and prime with zinc-chromate or epoxy primer. Ensure formation of primer fillets at all joints for sealing out moisture.
6. Torque stripe fasteners.

7.280 V-Belts

7.281 V-Belt Removal

a. Remove fanwheel per Section 6.210

b. Fully disengage belt tension actuator. Place a six-inch wooden block between clutch shaft and horizontal firewall per Figure 7-8. Block will prevent excessive sheave drop and protect forward flex plate.

c. Disconnect clutch lateral centering strut from upper frame and remove intermediate flex plate.

d. Mark drive belts for "fore" and "aft" position and direction of rotation if they will be reinstalled.

> **CAUTION**
>
> Used belts must be reinstalled in proper order due to individual differences in belt stretch.

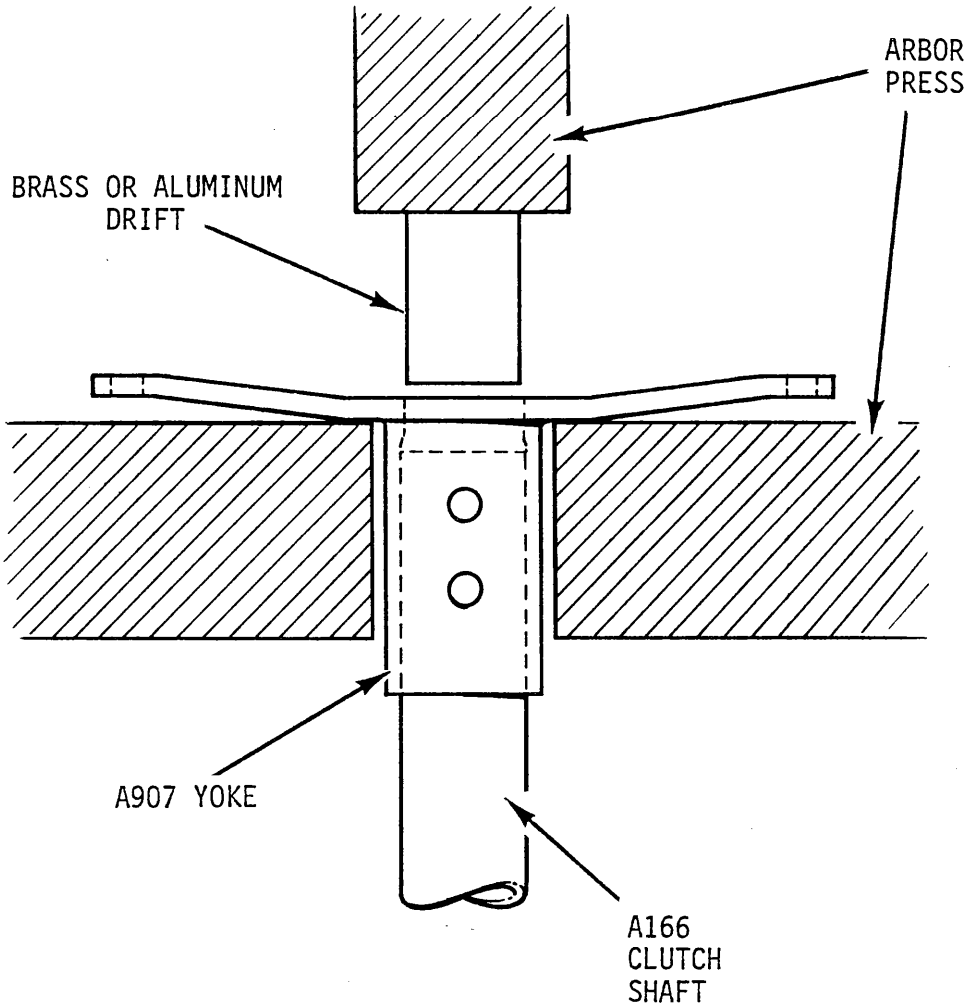

FIGURE 7-6A A907 YOKE REMOVAL

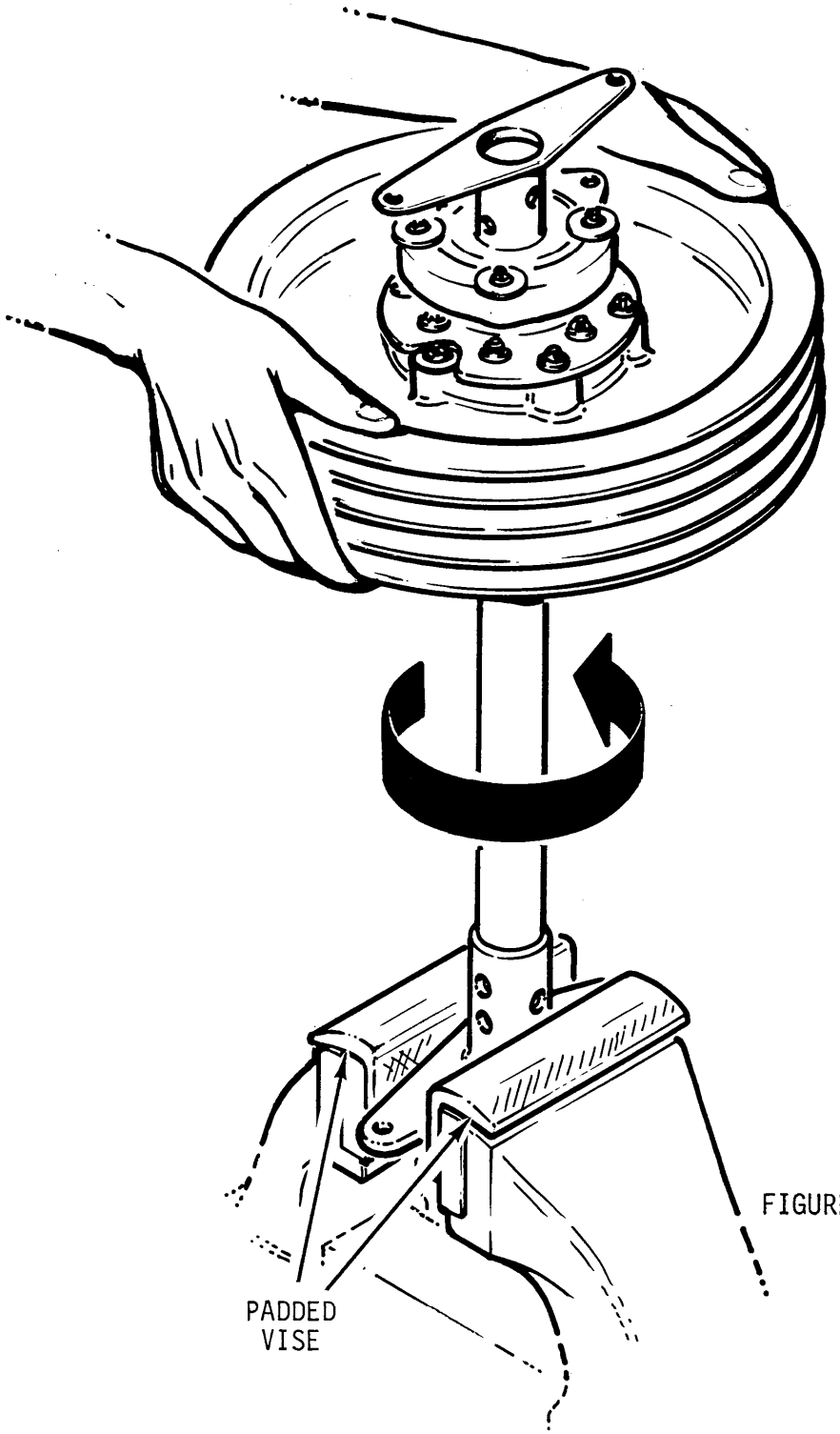

FIGURE 7-6B A907 YOKE REMOVAL

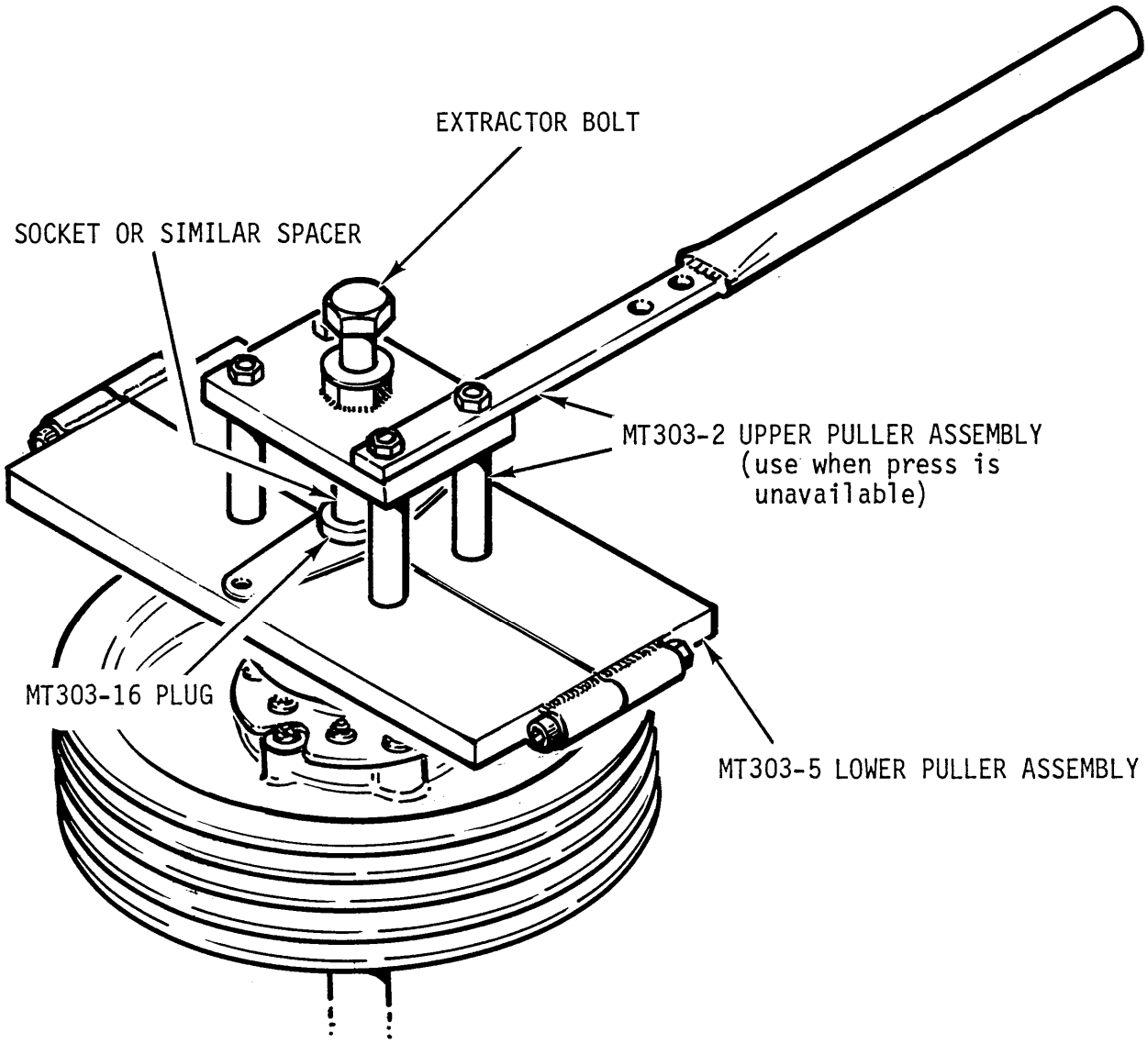

FIGURE 7-6C A195 YOKE REMOVAL

7.270 Yoke Removal and Installation (cont'd)

a) Disconnect yoke (A195) from the flexplate, leaving flexplate connected to the tail rotor driveshaft. Ensure washers are reinstalled in same position from which removed.

b) Remove the attaching bolts and clamping blocks.

WARNING

The arms of the A195 yoke are easily bent. Use extreme care when removing or reinstalling the A195 yoke on the clutch shaft. Always remove this yoke when shipping or transporting the clutch assembly.

c) Slide yoke off the aft portion of clutch shaft.

To install the yoke:

1) Slide A195 yoke onto aft end of clutch shaft.

2) Using the clamping blocks, install attaching bolts thru A195 yoke. Torque bolts to 100 in-lbs plus nut drag. Install palnuts and torque stripe.

3) Connect tail rotor driveshaft and flexplate per Section 7.320.

7.280 V-Belts

7.281 V-Belt Removal

a) Remove cooling fan and scroll per Section 6.210.

b) Put a six-inch wooden block under the clutch shaft, just forward of the upper sheave on the horizontal firewall. This keeps the sheave from dropping any farther than needed to pull the belts off and prevents damage to the forward flexplate. (Refer to Figure 7-8).

c) Mark and disconnect the intermediate flexplate and horizontal side strut per Section 7.330.

d) Mark the back of each belt with a felt pen "fore" or "aft" so they will be in the same positions if they are to be reinstalled. Mark the direction of rotation on each belt so that they cannot be reversed.

CAUTION

Used belts must be reinstalled in proper order due to individual differences in belt stretch.

7.281 V-Belt Removal (cont'd)

e) Loosen belt guide and position guide to remove v-belts.

f) Disconnect actuator wiring.

g) Remove belts from sheave and pull over aft yoke.

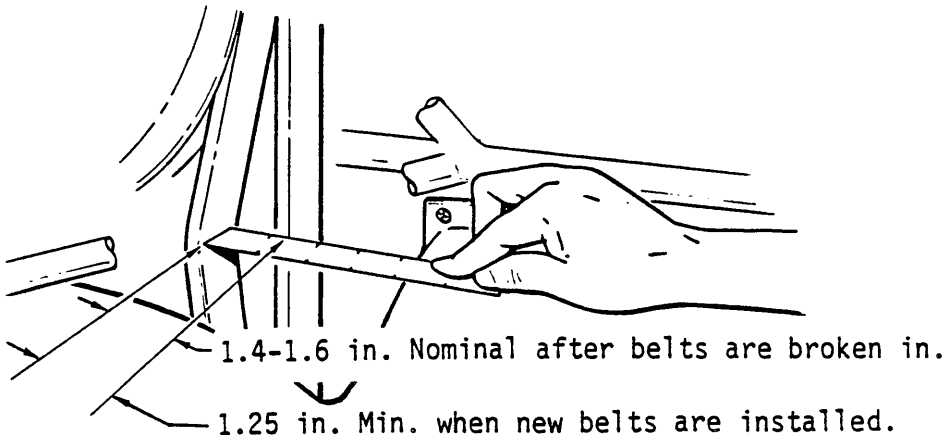

FIGURE 7-7A V-BELT DEFLECTION (ACTUATOR DISENGAGED)

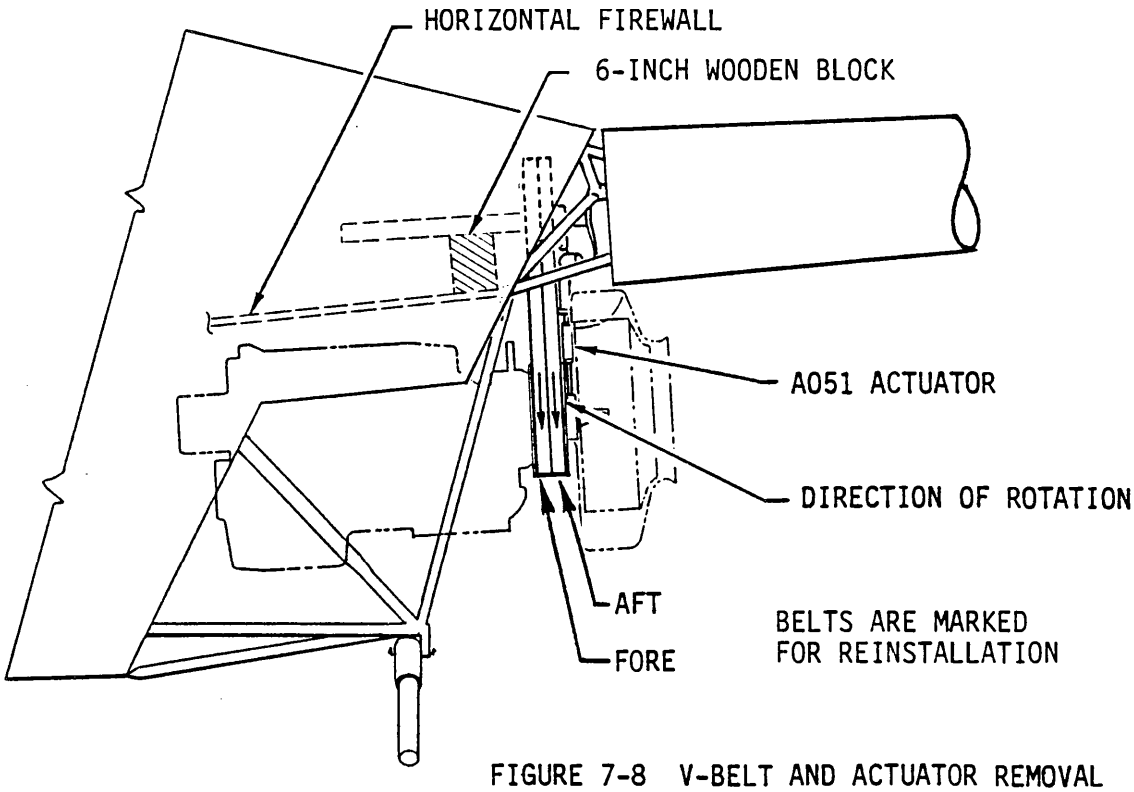

FIGURE 7-8 V-BELT AND ACTUATOR REMOVAL

7.282 V-Belt Installation

1. Evaluate alternator belt(s) condition and replace as required.

2. Inspect upper and lower actuator bearings per Section 2.505.

3. Identify type (deep-groove or shallow-groove) of upper and lower sheaves. Refer to Figures 7-3D & 2-11.

CAUTION

RHC does not recommend using A170-1 or -2 Revision N or prior upper sheaves with A493-1 Revision T or later lower sheaves. Such combinations may cause excessive drive belt vibration.

4. Inspect both sheaves. Replace any sheave showing corrosion, pitting or flaking of the metalized or anodized coatings, wear through anodized coating, grooves, roughness, or sharp ridges.

CAUTION

Rough or corroded grooves in the upper or lower sheave can cause V-belts to roll, break, or come off.

5. Paint lower sheave grooves with a thin coating of zinc-chromate or epoxy primer (ref. Section 1.400). Sheave may be primed without removal by using an aerosol can or air brush.

6. Inspect belts per Section 2.507.

7. Install belts on sheaves. Ensure belts are installed in proper fore/aft order with proper direction of rotation.

WARNING

V-belts are a matched set. Only install V-belts as matched set.

8. Connect actuator wiring.

9. Connect lateral centering strut bolts and torque per Section 1.320.

10. Install fanwheel and scroll per Section 6.220.

7.282 V-Belt Installation (cont'd)

11. Measure belt defection with actuator disengaged. Using a scale and finger pressure, belts must deflect inward 1.4 - 1.6 inches per Figure 7-7A. Adjust actuator down-limit stop screw (see Figure 7-15) as required to obtain correct dimension. Tighten down-limit stop screw jam nut.

CAUTION

Belts which are too tight can damage flex plates during start and belts which are too loose can jump out of grooves during engagement.

NOTE

A delay of more than 5 seconds between clutch switch engagement and rotor turning indicates excessive slack. If rotor rotates when cranking engine, belts may not have enough slack. Actuator down limit screw adjustments are required more frequently with new belts.

12. Check clutch sheave alignment per Section 7.230.

13. Shim and connect intermediate flex coupling per Section 7.330.

14. Rotate drive train by hand with actuator disengaged. Verify minimum 0.125 inch clearance with new belts (0.25 inch after approximately 10 hours) between intermediate flex coupling and A331-1 tail rotor bellcrank-to-A121-17 push-pull tube attach bolt. If clearance less than minimum, shim engine per Section 6.130.

15. Position V-belt guide to maintain clearance specified in Figure 7-8A. Torque attach hardware per Section 1.320.

16. If required, install protective clamp on upper frame per Figure 2-4B.

17. Ground run or hover helicopter for at least one-half hour.

18. At end of half-hour run, inspect primer wear pattern in lower sheave grooves. A similar wear pattern in all four grooves indicates compatible belt/sheave combination. A noticeably different wear pattern from groove to groove indicates combination is not compatible. Refer to Section 2.508 for allowable wear pattern limits.

19. If belt/sheave combination is not compatible, re-check sheave alignment, replace belts, and repeat installation procedure. If belt/sheave combination is still not compatible, it may be necessary to replace lower sheave. Wear pattern in all four grooves must be similar before aircraft is released for flight.

20. Check clutch shaft angle per Section 7.240

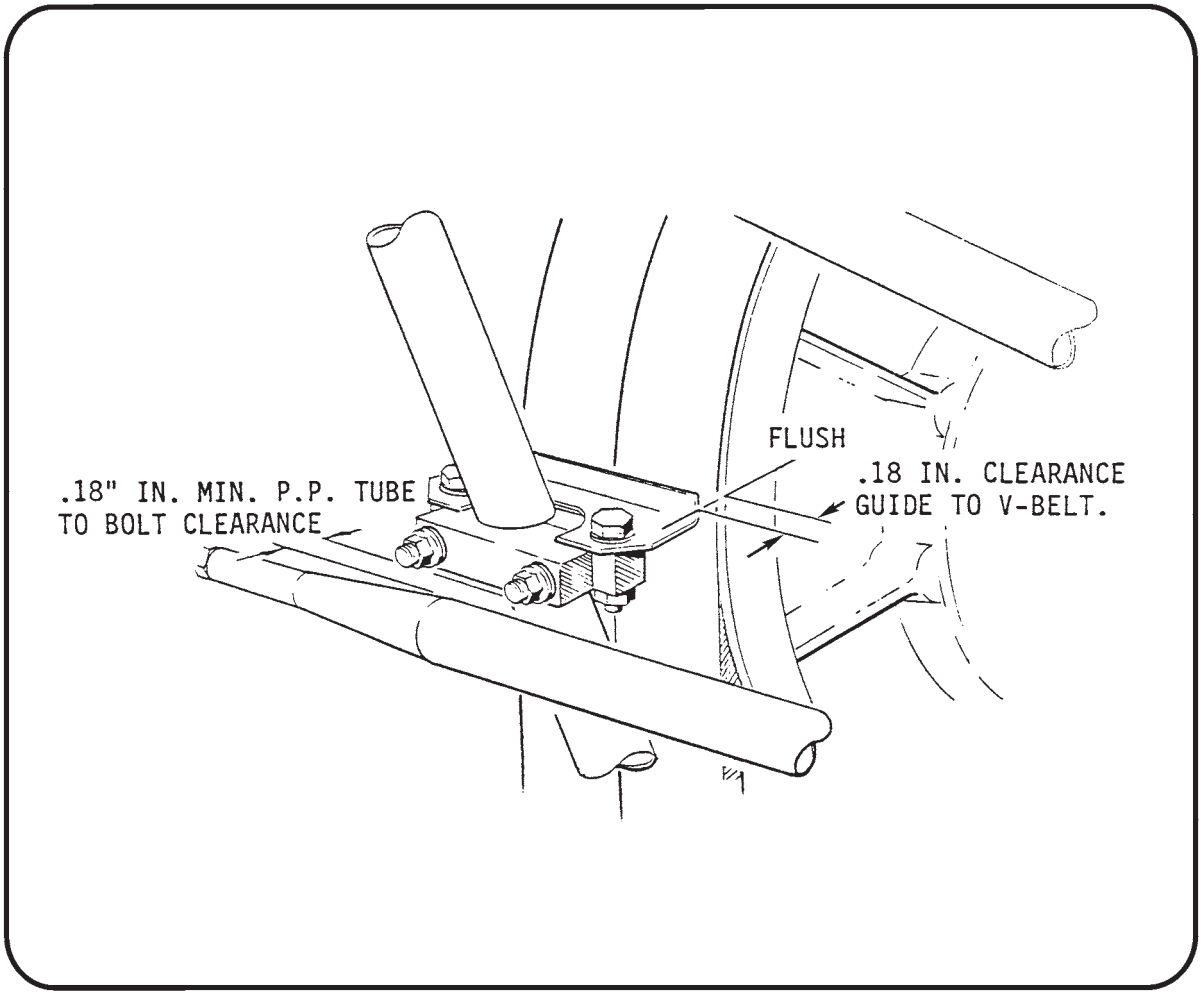

FIGURE 7-8A V-BELT GUIDE

7.282 V-Belt Installation (continued)

CAUTION

Position guide to 0.18 inch clearance with clutch engaged. Guide to be flushed with front face of sheave. Maintain 0.18 inch clearance between P/P tube and guide attach bolts.

NOTE

A020-2 upper frame S/N 0501 and subsequent have guide bracket welded to frame.

7.290 A007-3 & -5 Fanshaft and Bearing Assembly, Starter Ring Gear Support, Lower Sheave and Alternator Belt Replacement

7.291 Removal

a. Remove fanwheel and fiberglass scroll per § 6.210.

> NOTE
>
> Fanwheel and fiberglass scroll may be removed without splitting scroll.

b. Support clutch shaft assembly at horizontal firewall with a wooden block. Remove lower bolt connecting belt tension actuator to A181-4 lower bearing assembly.

c. Label drive belts (forward & aft) for reinstallation.

d. Cut safety wire and remove six NAS6606-24H bolts. Note number and thickness of washers under each bolt head.

e. Remove A007-3 or -5 fanshaft and bearing assembly. Temporarily secure lower sheave if it is not to be removed.

f. To remove lower sheave, tap it with a soft mallet while pulling.

g. Removal of starter ring gear support is required to change alternator belt or gain access to engine nose section.

   1. Loosen alternator belt tension.

   2. Note “0” mark on the starter ring gear support at one crankshaft flange bushing. Mark this bushing to ease reinstallation.

   3. Remove starter ring gear support.

7.292 Installation

a. Install new and spare alternator belts if required. Install starter ring gear support. Align “0” mark on ring gear support with marked bushing. Bushing and hole marked 0 are slightly larger than other five holes.

b. Install lower sheave and fanshaft assembly. Ensure one AN960-616 and one AN916-616L washer is installed under each NAS6606-24H bolt head. Torque bolts per § 1.320 in a crossing pattern. Safety wire bolts in pairs with 0.041 inch diameter stainless steel safety wire.

> **CAUTION**
>
> One AN960-616 washer and one AN960-616L washer must be installed under each NAS6606-24H bolt head for proper fanshaft-sheave-crankshaft clamp-up.

7.290 A007-3 & -5 Fanshaft and Bearing Assembly, Starter Ring Gear Support, Lower Sheave and Alternator Belt Replacement (cont'd)

7.292 Installation (cont'd)

CAUTION

RHC does not recommend using A170-1 or -2 Revision N or prior upper sheaves with A493-1 Revision T or later lower sheaves. Such combinations may cause excessive drive belt vibration. Refer to Figures 2-9 and 7-38.

c) Place drive belts in correct forward and aft order on upper and lower sheaves. Install lower bolt connecting belt tension actuator to lower actuator bearing assembly, and torque per Section 1.320.

d) Install fanwheel per Section 6.220.

e) Remove wooden block supporting clutch assembly. Adjust alternator belt tension per Lycoming Service Instruction 1129 (current revision).

WARNING

Bearings in A007-3 and A007-5 fanshaft bearing assemblies have internal clearance modified by RHC. **DO NOT SUBSTITUTE** any other bearing.

7.300 TAIL ROTOR DRIVESHAFT

7.310 Tail Rotor Driveshaft Removal

a) Disconnect the tail rotor shaft at the intermediate flexplate. Leave the flexplate connected to the aft clutch yoke. Use 4-inch block under the driveshaft near the forward end to support the driveshaft in the tailcone. This prevents damage to the aft flexplate.

b) Remove the tailcone per Section 4.311.

c) Use a 3-foot socket extension with a 3/8-inch socket to disconnect the two NAS1303 bolts which hold the driveshaft to its mounting bracket.

d) Disconnect tail rotor push-pull tube from tail rotor gearbox bellcrank arm. If push-pull tube length is not changed, rerigging is not required.

e) Remove the four bolts (one NAS1304-8, three MS20074-04-06) that hold the tail rotor gearbox to the tailcone casting. Hold the forward end of the driveshaft while the gearbox is pulled out of the tailcone casting far enough to allow removal of the flex coupling bolts.

f) Mark aft end of driveshaft and flexplate for reassembly. Disconnect driveshaft from flexplate, leaving flexplate connected to gearbox. Reinstall bolts, spacers and nuts on flexplate so none will be lost or misplaced.

g) The driveshaft can now be pulled out of the forward end of the tailcone.

7.320 Tail Rotor Drive Shaft Installation

Also applies to Tail Rotor Gearbox Installation to Tailcone.

a) Insert tail rotor drive shaft into tailcone and pull aft end of shaft through tailcone's aft casting.

b) Reconnect flex plate to tail rotor gearbox. Bonded washers on flex plate must be directly against flange of gearbox input shaft. Torque NAS1304 bolts per Section 1.320. (See Figure 7-9)

CAUTION

Improper installation of flex plate can damage tail rotor drive shaft and gearbox.

c) Support forward end of drive shaft and push flex coupling forward through aft casting.

d) Reconnect the four bolts that hold the gearbox to the casting. Torque NAS1304 bolt per Section 1.320. Torque the MS20074-04-06 bolts per Section 1.330 and safety with 0.032 inch diameter safety wire.

e) Connect damper assembly to tailcone frame and torque attach bolts per Section 1.320. Through inspection holes on side of tailcone, determine longitudinal alignment of damper clip (or arm) with tailcone's attachment bracket. If clearance or interference between clip (or arm) and bracket is greater than 0.12 inch, contact RHC Technical Support. Ensure damper is oriented per Figure 7-11B.

f) Install tailcone per Section 4.312.

g) Connect the A121-17 aft push-pull tube and torque fastener per Section 1.320.

h) Install and shim intermediate flex plate per Section 7.330.

i) Perform tail rotor drive shaft run-out check per Section 7.340.

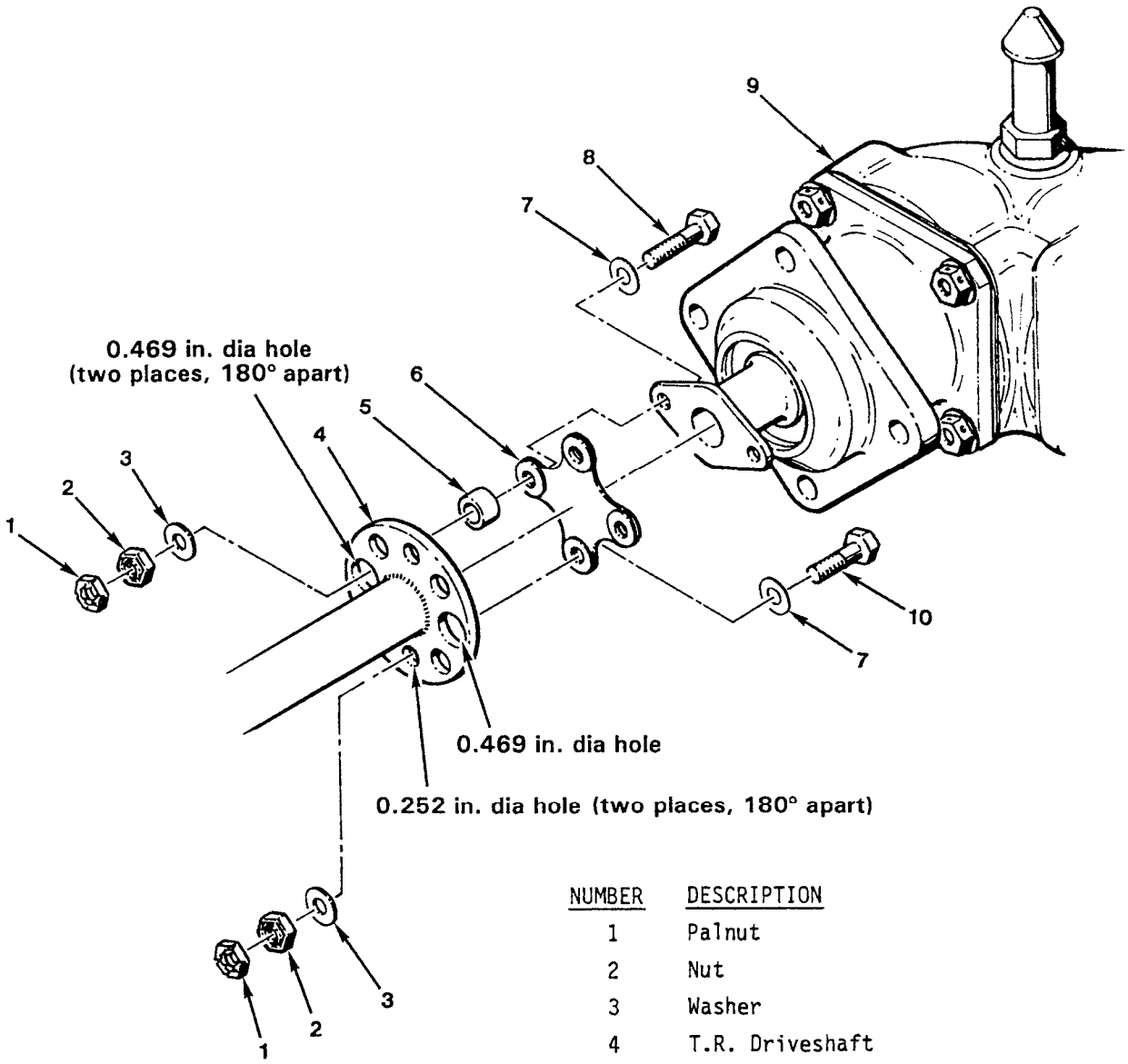

NUMBER	DESCRIPTION
1	Palnut
2	Nut
3	Washer
4	T.R. Driveshaft
5	Spacer
6	Flexplate
7	Washer
8	Bolt
9	T.R. Gearbox Assy.
10	Bolt

FIGURE 7-9

AFT FLEXPLATE INSTALLATION

*A197 T.R. Driveshaft no longer available. See R22 Parts Catalog for replacement with proper B224-1 T.R. Driveshaft and B223 Yoke combination.

7.321 Adjustment of Damper Friction

a) Remove tail rotor drive shaft from tailcone per Section 7.310.

b) Disassemble damper per Figure 7-10 or Figure 7-10A, as applicable.

c) Inspect the following parts for wear and replace worn parts:

1. Inspect A041-5 DU washers for worn Teflon® coating (dark gray face).

2. Inspect A141-15 washers and A041-3 arm for indications of wear or grooving.

d) Assemble damper per Figure 7-10 or Figure 7-10A, as applicable. Install spring washers with concave face toward A041-5 DU washers.

CAUTION

The Teflon® (dark gray) face of the A041-5 DU washer must be placed against the A141-36 washer or A041-3 arm. Remove plastic or tape coating, if installed.

e) Torque nuts per Section 1.320.

f) Using a spring scale or dead weight, measure pivot frictions per Figure 7-11A. If friction is less than specified, bend A041-6 spring washer until it has a 0.070 ± 0.010 inch total height. If spring washer height is within limits but friction is still too low, lap metal from end of A105-9 journal. If friction is greater than specified, flatten A041-6 spring washer slightly or replace A105-9 journal.

FIGURE 7-10
DAMPER ASSEMBLY

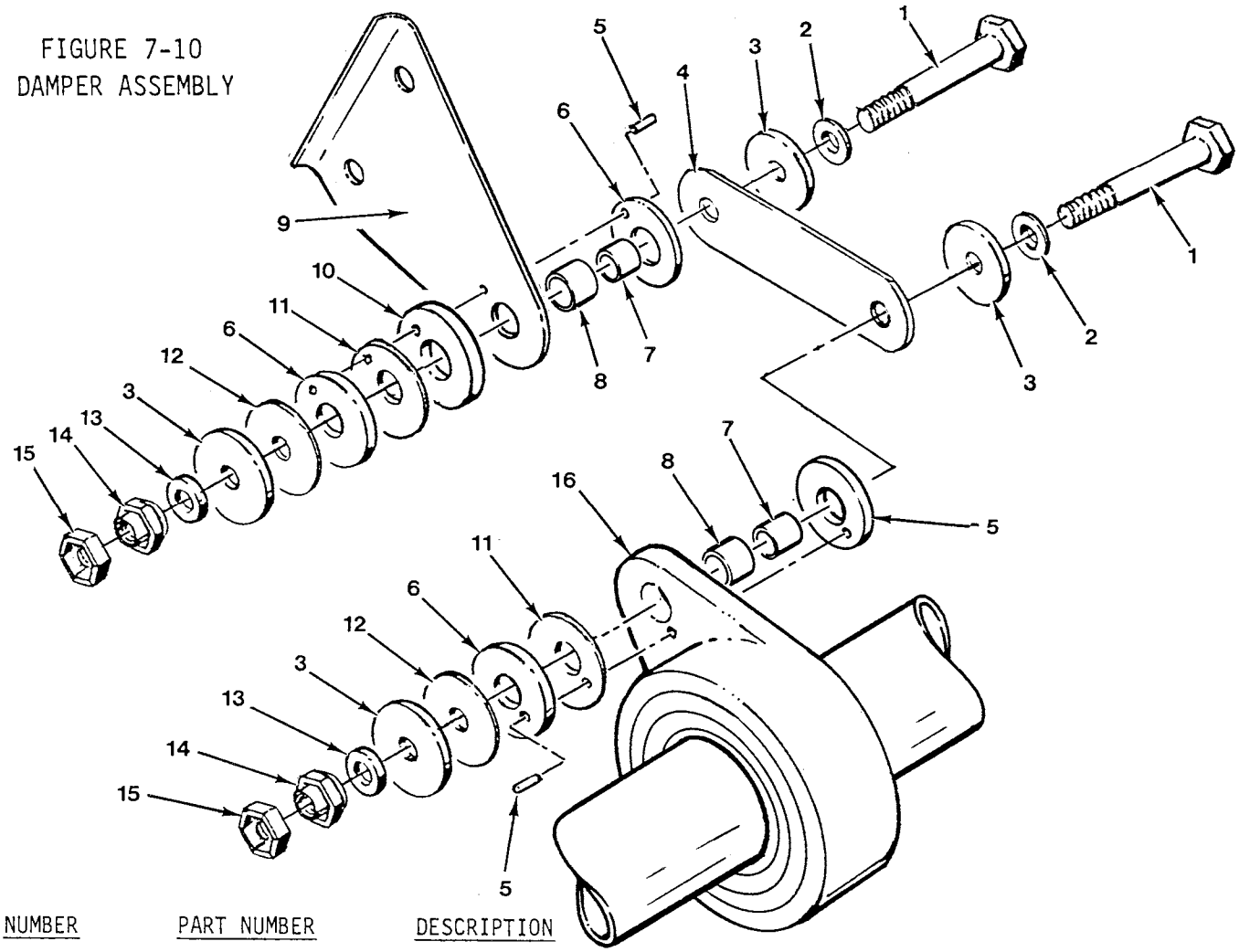

NUMBER	PART NUMBER	DESCRIPTION
1	NAS6603-8	Bolt
2	AN960-10L	Washer
3	A141-18	Washer
4	A041-3	Arm
5	A041-10	Dowel Pin
6	A041-5	DU Washer
7	A105-9	Journal
8	04DU04	Bushing
9	A041-8	Clip
10	A041-9	Spacer
11	A041-6	Spring Washer
12	A041-15	Washer
13	AN960-10	Washer
14	NAS679A3	Nut
15	B330-7	Palnut
16	A041-11	Bearing Assembly
17	A041-7*	Clip
18	A041-4*	Spacer

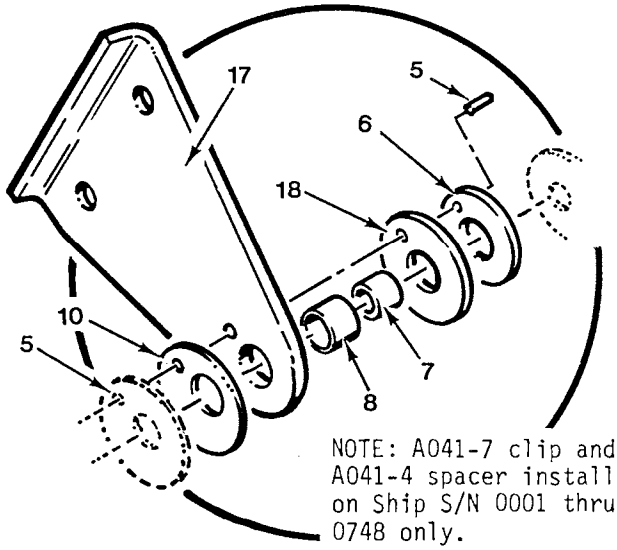

NOTE: A041-7 clip and A041-4 spacer installed on Ship S/N 0001 thru 0748 only.

*No longer available. Order A041-9 spacer along with A041-8 clip for replacement.

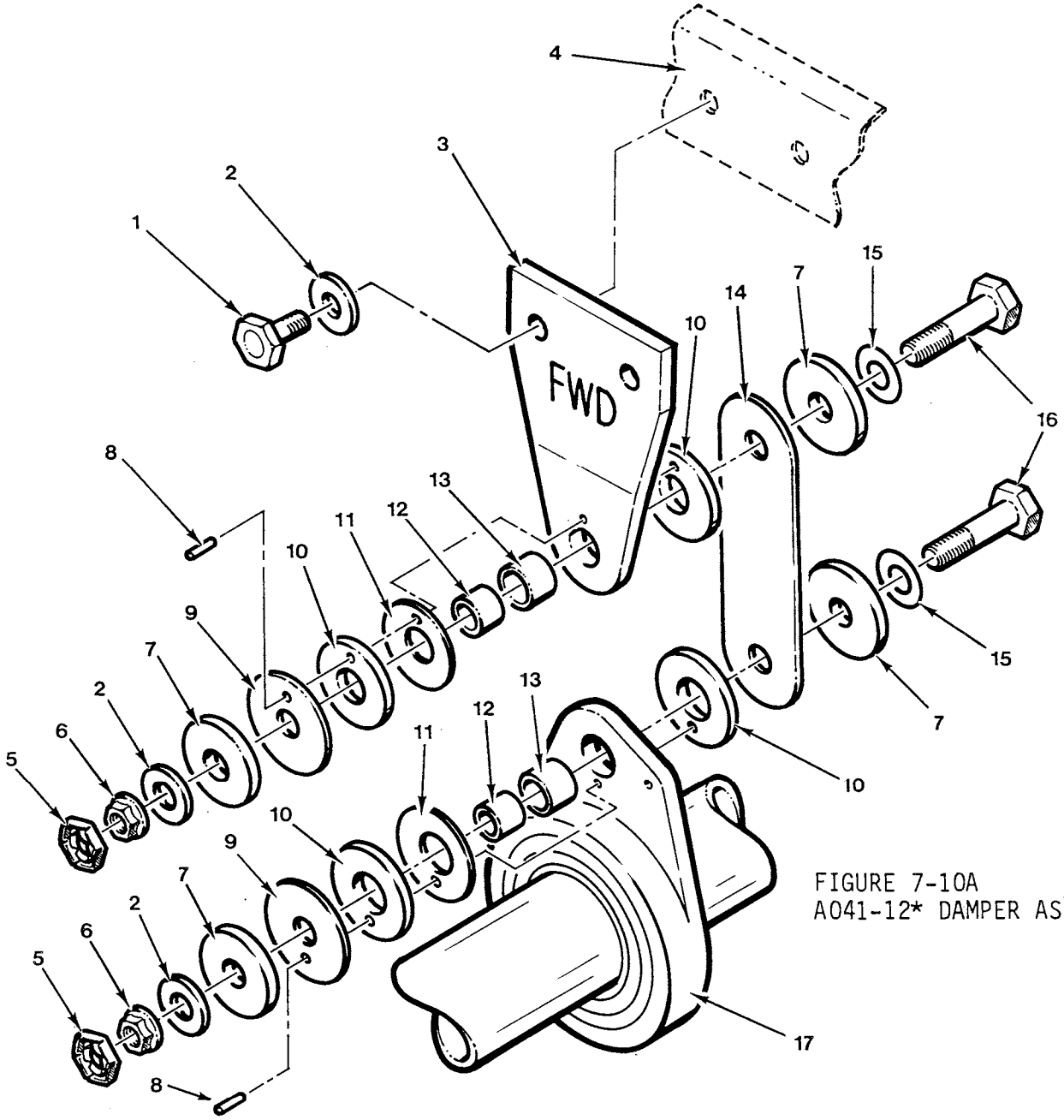

FIGURE 7-10A
A041-12* DAMPER ASSEMBLY

NUMBER	PART NUMBER	DESCRIPTION	NUMBER	PART NUMBER	DESCRIPTION
1.	NAS6603-3	Bolt	11	A041-6	Spring Washer
2	AN960-10	Washer	12	A105-9	Journal
3	A041-13	Arm	13	04DU04	Bushing
4	B288-8	Support (Ref)	14	A041-3	Arm
5	B330-7	Palnut	15	AN960-10L	Washer
6	MS21042L3	Nut	16	NAS6603-8	Bolt
7	A141-18	Washer	17	A041-11	Bearing Assembly
8	A041-10	Dowel Pin	18	A041-12*	Damper Assembly (Includes items 3, and 5-17)
9	A141-15	Washer			
10	A041-5	DU Washer			

*Ship S/N 2571 and on, and ships equipped with A023-22 or A023-23 tailcones.

This page intentionally left blank.

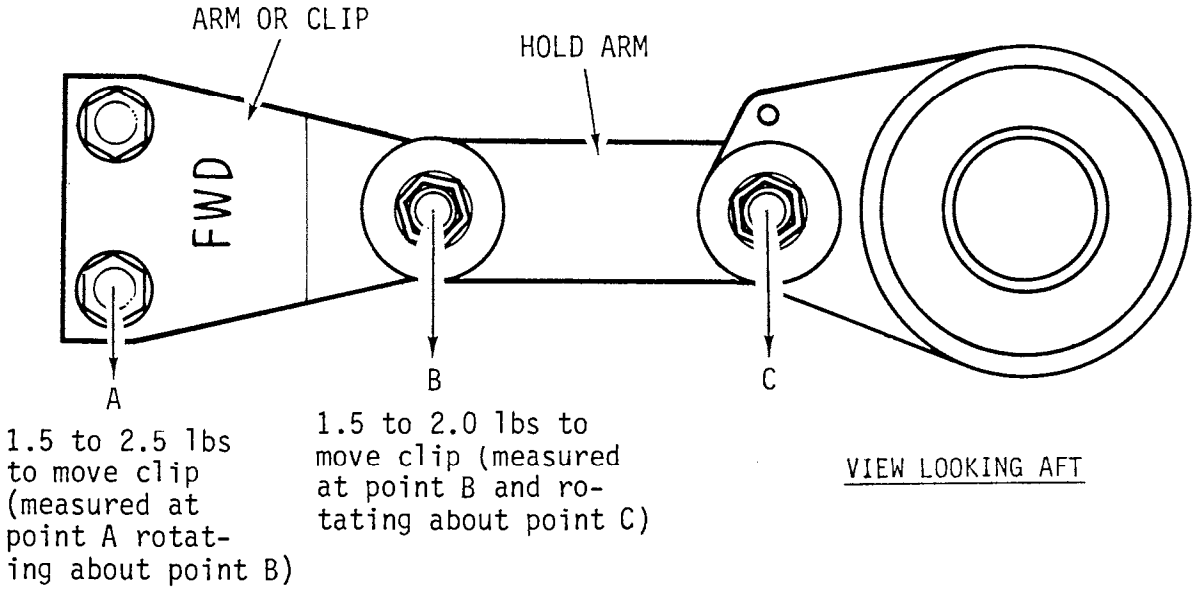

FIGURE 7-11A

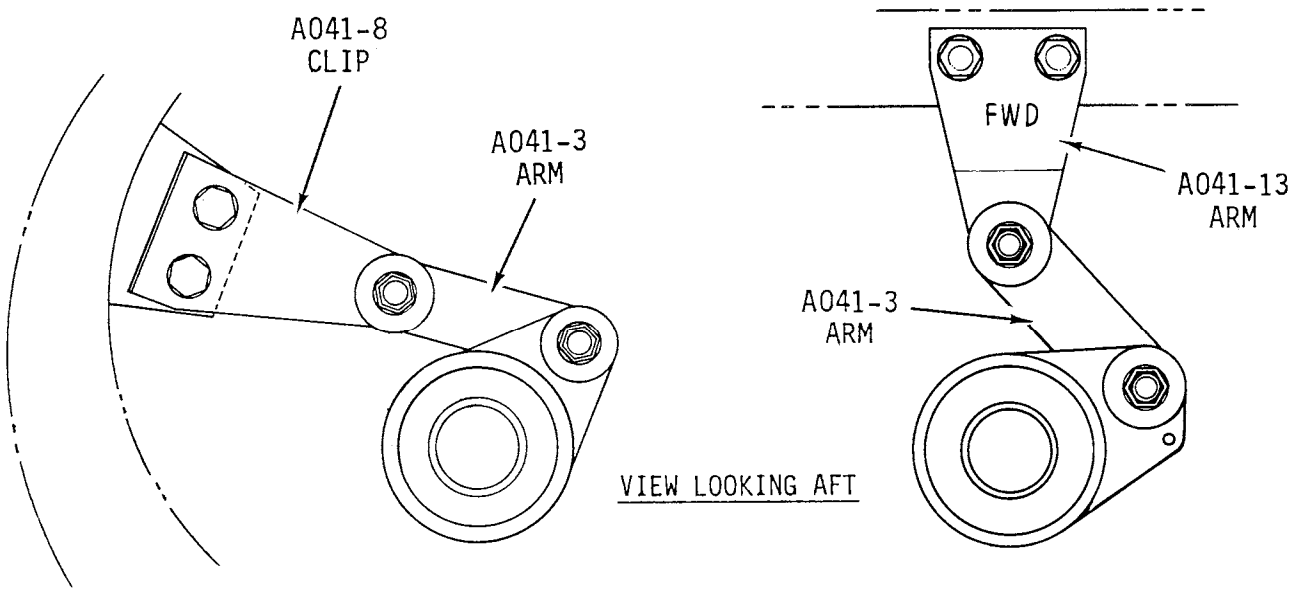

A041-1 DAMPER ASSEMBLY ORIENTATION

A041-12 DAMPER ASSEMBLY ORIENTATION

FIGURE 7-11B

7.321 Adjustment of Damper Friction (cont'd)

CAUTION

Do not adjust damper drag by changing bolt torque.

f) Torque MS21042L4 nut per Section 1.320 and recheck damper drag. Install B330-13 palnut and torque stripe.

g) Install tail rotor drive shaft per Section 7.320.

7.330 Intermediate Flex Plate Installation and Shimming

Measurements taken with intermediate flex plate removed.

a) Engage clutch actuator.

b) Rotate tail rotor drive shaft yoke and A195 yoke so yoke arms are horizontal.

c) Insert NAS1304 bolt through tail rotor shaft yoke and A195 yoke at 9 o'clock position. Measure gap between yoke arms at 3 o'clock position.

d) Insert bolt at 3 o'clock, remove bolt at 9 o'clock, and measure gap at 9 o'clock. Measurements in sequence c and d are measurement 1.

e) Remove bolt and rotate tail rotor drive shaft 180 degrees. Repeat steps c) and d). This will be measurement 2.

NOTE

Measurement 1 and 2 should be similar. If measurements are not similar one or both yokes are bent.

f) Record difference between 3 o'clock and 9 o'clock gaps in measurement 1 and in measurement 2. Difference between 3 o'clock and 9 o'clock gap must not exceed 0.050 inch in either measurement 1 or measurement 2. If difference exceeds 0.050 inch adjust clutch lateral centering strut length as required and align sheaves per Section 7.230.

g) Use following formula to obtain calculated dimensions for proper intermediate flex plate shimming.

TABLE 7-1

INTERMEDIATE FLEX PLATE SHIM TABLE

	CLUTCH SIDE	TR DRIVE SHAFT SIDE
Calculated dimension in inches from Section 7.330(g)	Shim required between A947-2 flex plate and A195-1 yoke 2 places.	Shim required between A947-2 flex plate and B223-X yoke 2 places.
0.135 or more	Remove TRGB shims or shim A947-1 flex plate** or change A907 yoke length** or install longer B223 yoke	
0.134 to 0.105	AN960-416 washer	AN960-416 washer
0.104 to 0.075	AN960-416 washer	AN960-416L washer
0.074 to 0.045	AN960-416L washer	AN960-416L washer
0.044 to 0.015	AN960-416L washer	None
0.014 to -0.015	None	None
-0.016 or greater negative number	Shim TRGB aft (max. 0.080 inch*) or remove shims at A947-1 flex plate** or change A907 yoke length** or install shorter B223 yoke	

*When shimming tail rotor gearbox, replace MS20074-04-04 bolts with MS20074-04-06 bolts. If over 0.040 inch shims used, change washers under bolt heads to AN960-416L. Total shims must not exceed 0.080 inch. Torque bolts per Section 1.330.

**Requires clutch sheave alignment check per Section 7.230.

7.330 Intermediate Flex Plate Installation and Shimming (cont'd)

NOTE

Use measurement with smaller difference between 3 and 9 o'clock gaps.

9 o'clock reading + 3 o'clock reading	=	_____
Divide by 2	=	_____
Subtract	-	_____*
Calculated Dimension	=	_____

*Measure A947-2 flex plate thickness across bonded washers four places and average.

Shim as required per Table 7-1.

NOTE

When shims are installed or removed between tail rotor gearbox and tailcone casting, lengthen A121-17 push-pull tube by 1/2 turn of rod end for each 0.018 inch that tail rotor gearbox is shimmed aft; shorten A121-17 push-pull tube by 1/2 turn of rod end for each 0.018 inch of shims removed.

h) Install A947-2 flex plate using shims determined above. Torque attach bolts per Section 1.320. Install palnut and torque stripe.

NOTE

Use AN960-416L or AN960-416 washers under nuts as required to expose two to four threads beyond nut.

WARNING

A193 flex plates, which do not have bonded washers, are obsolete and must be replaced with A947 flex plates having bonded washers. If a bonded washer separates from an A947 flex plate, flex plate is unairworthy and cannot be repaired.

i) Check clearance between A331 bellcrank-to-A121-17 push-pull tube forward rod end attach bolt and flex plate (0.250 inch minimum) with actuator disengaged.

7.340 Checking Tail Rotor Drive Shaft Runout

Excessive tail rotor drive shaft runout can cause intermediate flex coupling or damper assembly failure. To check runout:

a) Remove tailcone inspection covers on tailcone right side. Engage clutch.

b) Assemble MT260-6 tool and suitable dial indicator.

NOTE

The dial indicator included in the Robinson MT122 bolt stretch gauge can be used.

c) Insert dial indicator through farthest aft inspection hole on right side of tailcone. Press dial indicator firmly against tailcone with extension riding on drive shaft.

d) Have someone rotate drive train at A166 clutch shaft at least three full revolutions. Dial indicator may vary somewhat with each revolution so it will be necessary to take an average.

e) Repeat procedure in steps c) and d) at next inspection hole forward.

f) Remove extension from MT260 tool and, using longer extensions, check drive shaft at remaining inspection holes.

g) Maximum runout at any location must not exceed 0.025 inch. If runout is excessive, drive shaft must be repaired or replaced.

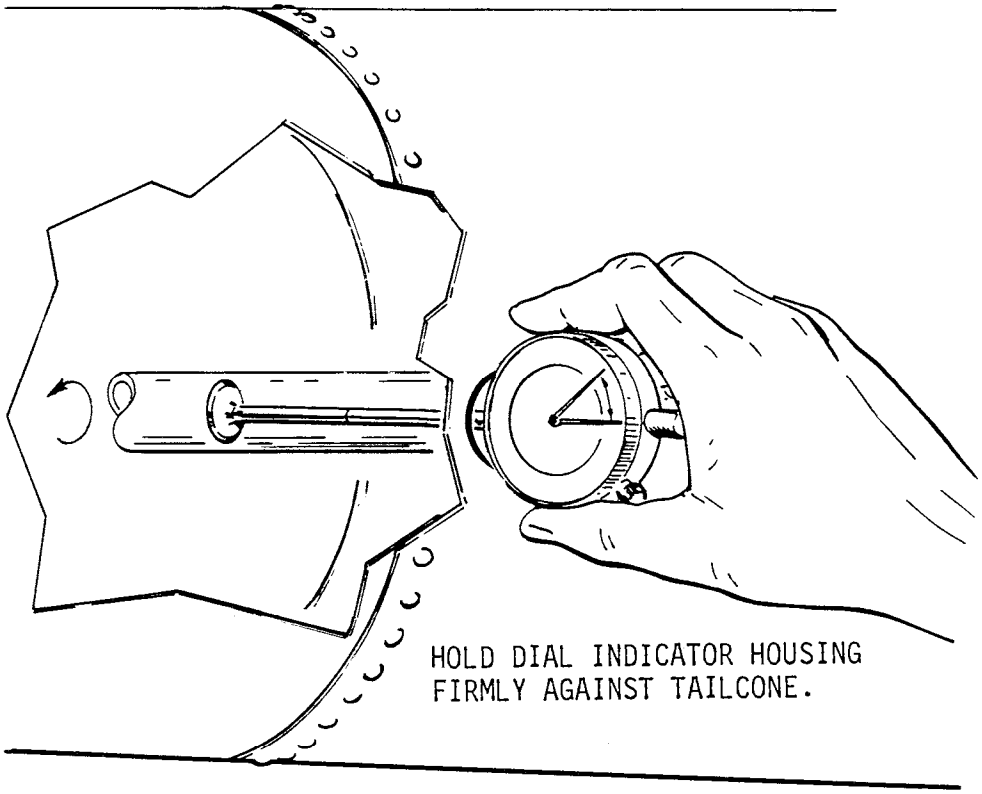

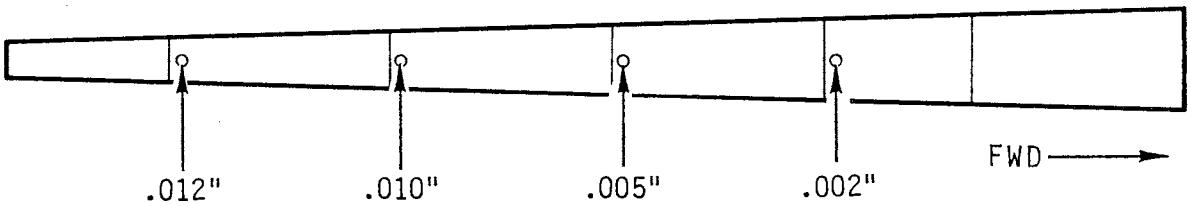

Sample of measurements taken.

FIGURE 7-12 TAIL ROTOR DRIVESHAFT RUNOUT CHECK

7.350 Two-Piece Tail Rotor Driveshaft

a) The two-piece tail rotor driveshaft consists of a B224-1 driveshaft, B223-1, -2, -3, or -4 yoke assembly, A041-1 damper bearing assembly, A553-2 block and two A207-4 blocks. See Figure 7-12A.

b) The A041-1 damper bearing assembly is field replaceable only with the two-piece tail rotor driveshaft.

c) The B224-1 driveshaft is produced in one length only. The overall length of the driveshaft assembly may be adjusted with various length B223 yokes. The yokes are produced in .150 inch length increments. See Figure 7-12B.

d) A197-1 one-piece driveshaft assemblies may be replaced with the two-piece driveshaft per the table below:

One-Piece Driveshaft	Overall Length (inches)	B223 Yoke Req. w/ B224 D.S.
A197-7	140.25	-1
A197-4	140.40	-2
A197-5	140.55	-3
A197-6	140.70	-4
A197-1	Varies	As Required

e) If the length of the driveshaft cannot be measured or is unknown, use the following procedure to determine the correct B223 yoke to use:

1. Install the intermediate flexplate onto the A195-1 yoke on the clutch shaft. For this measurement procedure, no shims should be installed between the beveled washers or the bonded washers on the flexplate and the A195-1 yoke.

2. Install the A553-2 block into the forward end of the driveshaft. Align the two bolt holes in the block and the driveshaft.

3. Consult the appropriate section of this manual for the following installation steps. Connect the B224-1 driveshaft to the aft flexplate and the tail rotor gearbox input yoke. Install the gearbox on the tailcone. Connect the damper assembly to the clip on the inside of the tailcone. Install the tailcone on the upper steel tube frame. Engage the actuator.

7.350 Two-Piece Tail Rotor Driveshaft (cont'd)

4. Hold the driveshaft centered on the intermediate flexplate. Measure the distance from the flexplate to the center of the forward hole on the driveshaft. Subtract .032 inches from this measurement, which is the thickness of the beveled washer or the bonded washer. This will be the Calculated Dimension. Select the B223 yoke which is closest to but does not exceed the Calculated Dimension. Shims may be added or subtracted between the tail rotor gearbox and the tailcone aft casting to adjust the driveshaft-to-flexplate dimension. See Figure 7-12B. The difference between the Calculated Dimension and the length of the B223 yoke will be taken up with shims per Section 7.330 of this manual.

5. Install A553-2 block in yoke end of T.R. driveshaft. Removal of primer to install block is allowed. If primer is removed, swab wet primer inside the T.R. driveshaft before installing block. After installation, prime inside of T.R. driveshaft to cover tube and seal edges of block.

6. Install the correct length B223 yoke onto the forward end of the driveshaft. Align the two bolt holes. Install two NAS1304-21 bolts with a washer and a B207-4 block under the bolt heads and the nuts. Torque the nuts to 100 inch-pounds plus nut drag (add 10% for the total torque-110 inch-pounds). Install and tighten the palnuts.

7. Use Zinc Chromate or epoxy primer to form fillets at all joints for sealing moisture out. Paint as required.

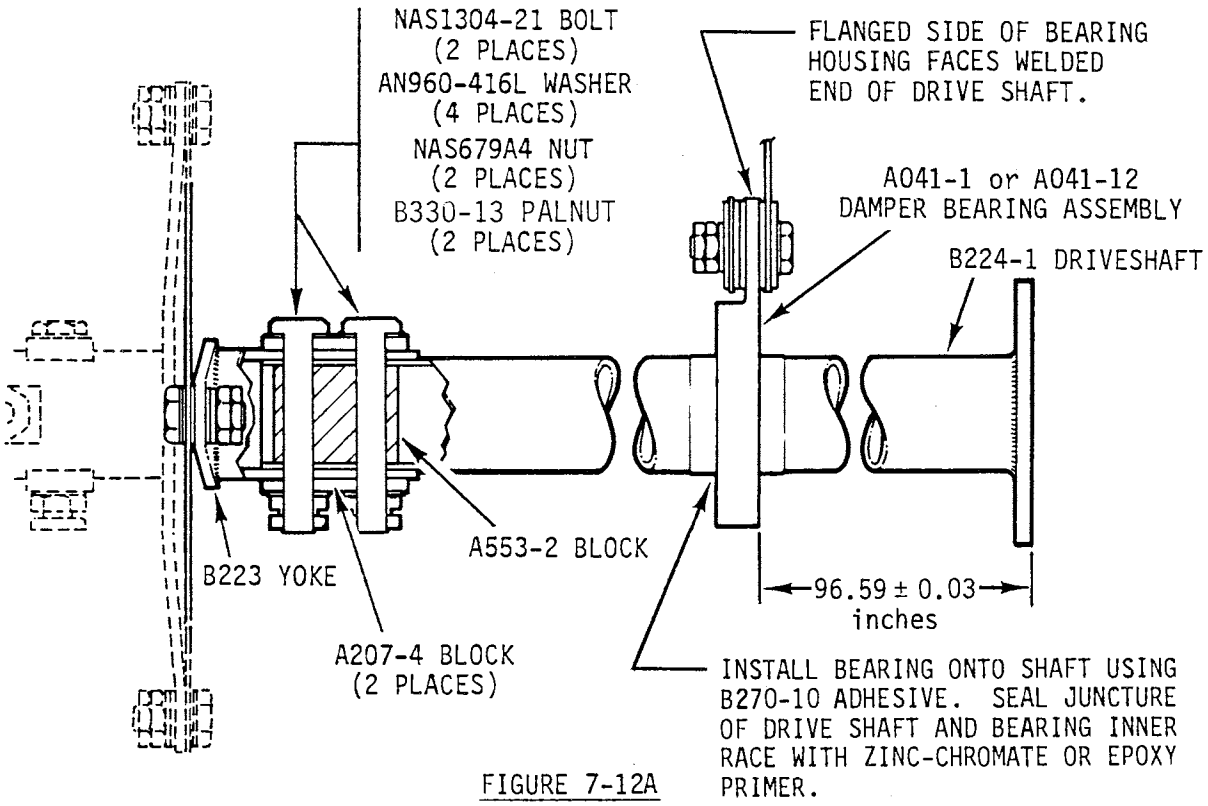

FIGURE 7-12A

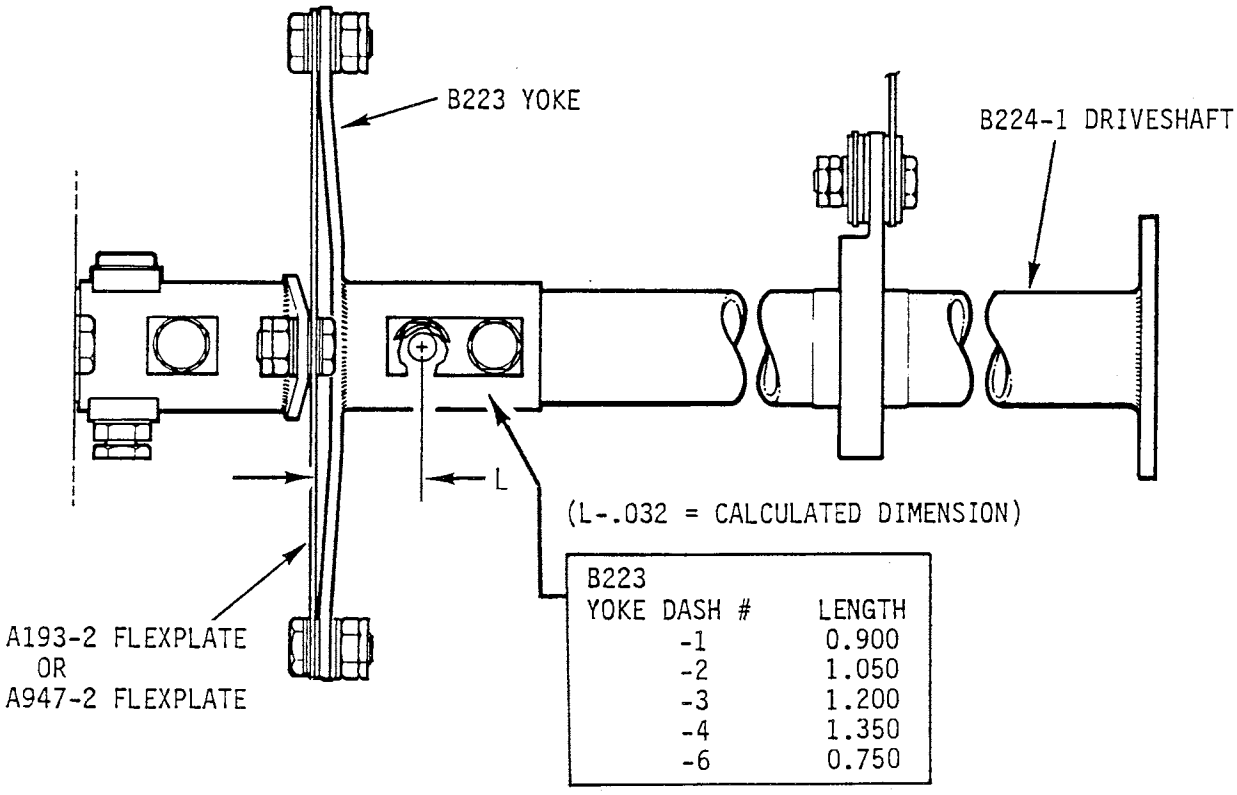

B223 YOKE DASH #	LENGTH
-1	0.900
-2	1.050
-3	1.200
-4	1.350
-6	0.750

FIGURE 7-12B

7.360 B224-1 Tail Rotor Driveshaft Corrosion Removal

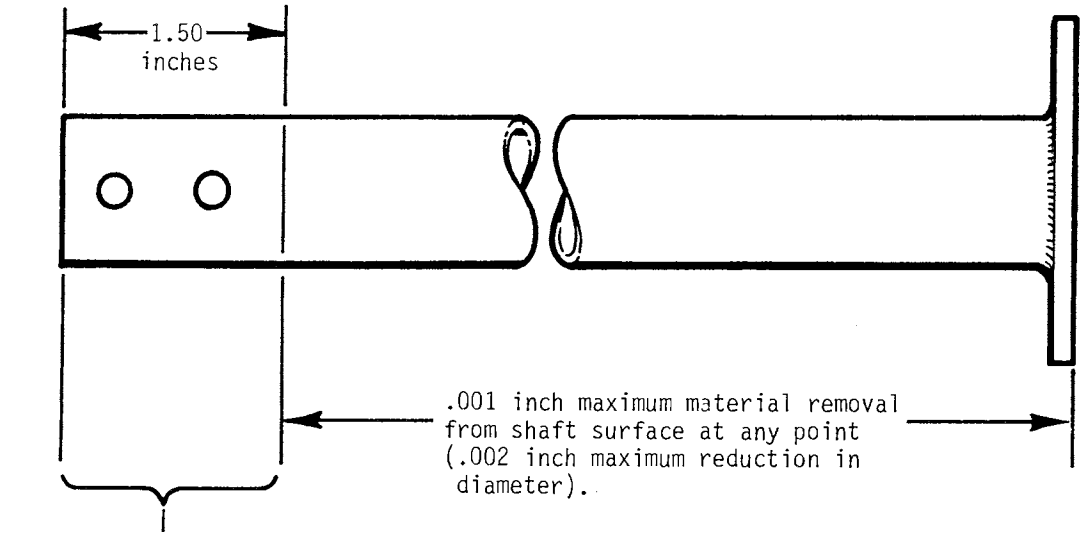

a) No power tools allowed.

b) Remove only the minimum amount of material necessary to clean up damage; do not exceed limitations shown.

c) Sand or polish parallel to the shaft's long axis.

d) Polish reworked areas with 400 grit or finer wet-or-dry sandpaper.

e) Zinc chromate or epoxy prime bare metal surfaces.

7.400 TAIL ROTOR GEARBOX

7.410 Tail Rotor Gearbox Removal

1. Mark tail rotor hub and blades and tail rotor pitch links to their respective pitch control arms before disassembly. This will facilitate reinstallation and eliminate re-rigging tail rotor if push-pull tube lengths are not altered.

2. Remove tail rotor assembly. Leave pitch control links attached to tail rotor blades.

3. Disconnect A120-1 bellcrank from push-pull tube.

4. Disconnect A120 bellcrank from gearbox and reassemble bellcrank hardware to bellcrank. Slide pitch control, with bellcrank attached, off gearbox output shaft.

5. Disconnect gearbox chip detector wire at quick disconnect.

6. Remove tail rotor driveshaft per Section 7.310.

7. Remove aft flex plate from gearbox. Reinstall bolts, spacers, and nuts on flex plate to prevent loss.

7.420 Tail Rotor Gearbox Installation

1. Install tail rotor drive shaft per Section 7.310.

WARNING

A193 flex plates, which do not have bonded washers, are obsolete and must be replaced with A947 flex plates having bonded washers. If a bonded washer separates from an A947 flex plate, flex plate is unairworthy and cannot be repaired.

2. Install tail rotor pitch control and bellcrank. Check bellcrank to pitch control shimming per Section 8.560.

3. Connect A121-17 push-pull tube to aft bellcrank.

4. Install tail rotor assembly per Section 9.213.

7.430 Tail Rotor Gearbox Shimming

Shimming of gearbox at mounting flange is only required when intermediate flexplate gap between clutch shaft yoke and tail rotor drive shaft forward yoke is too small to allow installation of flexplate. Gearbox may be shimmed aft a maximum of 0.080 inch. If shims are installed (3) MS20074-04-06 and (1) NAS1304-8 bolts must be used for gearbox-to-casting installation. If more than 0.040 inch shims are used, change NAS1149F0463P washers under bolt heads to NAS1149F0432P. If tail rotor system is rigged and shims are subsequently installed, extend A121-17 push-pull tube aft rod end 1/2 turn for each 0.018 inch the gearbox is shimmed aft; retract rod end 1/2 turn for each 0.018 inch of shims removed.

7.440 Tail Rotor Gearbox Chip Indicator

If "TR CHIP" light illuminates:

1. Drain and flush gearbox per Section 1.130 except strain oil (a paint filter works well) while draining and examine any particles found in oil or on chip detector.

2. Particles larger than 0.09 inch long or 0.02 inch wide are cause for concern and should be identified as ferrous or non-ferrous with a magnet. If particles are ferrous return gearbox to RHC for repair along with particles. If particles are non-ferrous, drain and flush gearbox per Section 1.130.

3. If "TR CHIP" illuminates again within next 100 hours time-in-service a gearbox failure may be imminent. Return gearbox to RHC for repair.

7.450 A021 Tail Rotor Gearbox Output Shaft Seal Replacement

1. Drain gearbox oil. Clean and inspect chip detector. Clean sight gage as required. Reinstall chip detector and sight gage, torque per Section 1.330 and safety wire.

2. Remove tail rotor per Section 9.210.

3. Remove pitch control per Section 8.561 and clean gearbox output shaft.

4. Verify tailcone-to-upper frame attach bolts are torqued per Section 1.320.

5. See Figures 7-13A and 7-13B. Slide MT295-10 mandrel on output shaft until it contacts seal. Tape mandrel to gearbox to maintain position when punching holes in seal.

6. Using small holes in MT295-10 mandrel as a guide, punch four holes in output shaft seal with MT295-3 punch.

CAUTION

MT295-10 mandrel is designed to guide and limit MT295-3 punch protrusion into gearbox. Punching seal using other tools may damage gearbox case, output shaft, and/or bearings.

7. Remove tape holding MT295-10 mandrel. Rotate mandrel to align large holes in flange with punched holes in output shaft seal. Install a 92470A113 screw thru each large hole in flange into matching hole in seal. Tighten screws until heads contact mandrel flange; do not overtighten screws.

CAUTION

Do not use screws longer than 0.75 inch; longer screws may damage bearing.

8. See Figure 7-13C. Lubricate MT295-6 screw threads with anti-seize and install in end of MT295-10 mandrel. Tighten screw to remove seal. Remove mandrel and seal.

9. Carefully clean seal seating surfaces in gearbox and on output shaft with a solvent-dampened cloth, dry, and inspect for damage. Verify output shaft shoulder has a smooth edge and will not damage seal lip. Do not polish or alter seal seating surfaces. Return gearbox to RHC for repair if damage is noted.

10. See Figure 7-13D. Lubricate new A966-2 seal inner lip and output shaft seal seat area with A257-2 lubricant. Do not lubricate seal outside edge and its mating surface in gearbox; they must remain clean and dry. Slide seal on output shaft with cupped face toward gearbox until seal contacts gearbox.

7.450 A021 Tail Rotor Gearbox Output Shaft Seal Replacement (cont'd)

11. Remove MT295-6 screw and old seal from MT295-10 mandrel and slide mandrel on output shaft until it contacts seal.

12. See Figures 7-13A and 7-13B. Determine if gearbox output shaft seal installation is recessed type or flush type. Install flush-type seal until it is flush with seal bore; install recessed-type seal until MT295-10 mandrel contacts gearbox face. Lightly tap end of mandrel with soft-face hammer until seal is properly positioned.

13. Remove mandrel.

14. Service tail rotor gearbox with A257-2 lubricant. Verify filler-vent plug vent holes are clear. Install filler-vent plug and torque per Section 1.330.

15. Install pitch control per Section 8.562.

16. Install tail rotor per Section 9.212 or 9.213, as applicable.

17. Inspect seal for leaks after dynamic balancing tail rotor.

7.460 B021 Tail Rotor Gearbox Output Shaft Seal Replacement

1. Drain gearbox oil. Clean and inspect chip detector. Clean sight gage as required. Using new O-ring(s) install chip detector and sight gage, torque per Section 1.330, and safety wire.

2. Remove tail rotor per Section 9.210.

3. Remove pitch control per Section 8.561 and clean gearbox output shaft.

4. Cut safety wire and remove four drilled-head bolts securing B552-1 retainer and slide retainer off output shaft.

CAUTION

Do not alter shim stack-up between retainer and bearing or bearing preload may be adversely affected.

5. Remove seal and O-ring from B552-1 retainer.

6. Carefully clean and dry retainer seal seating surface and O-ring groove.

7. With seal lip toward gearbox, press new A966-4 seal into retainer bore 0.140/0.160 inch below external flat surface. Lubricate new O-ring with A257-2 gear oil and install in retainer groove without twisting.

8. Lubricate seal seating area of output shaft with A257-2 gear oil.

9. Carefully slide retainer over output shaft. Align retainer and gearbox bolt holes and press retainer into gearbox. Install four drilled-head bolts, torque per Section 1.330, and safety wire.

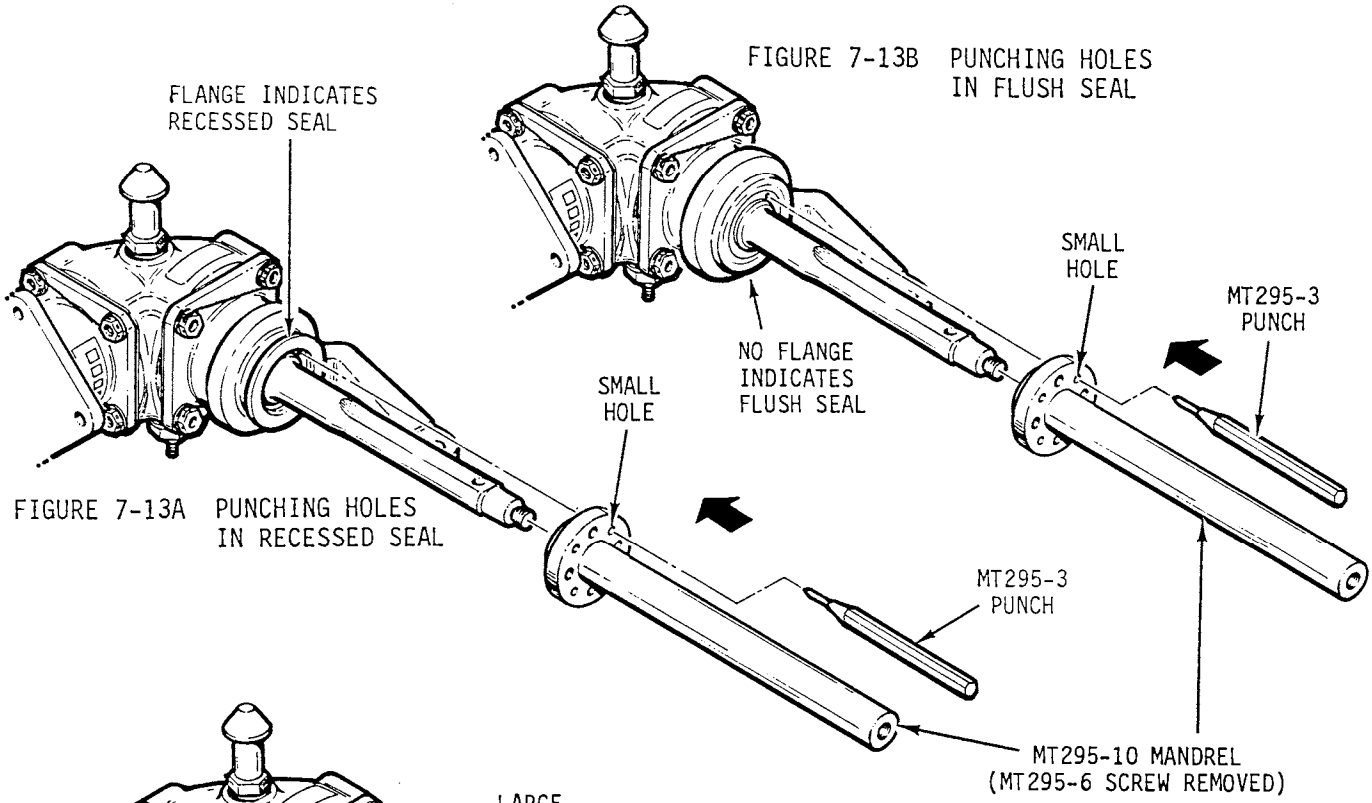

FIGURE 7-13A PUNCHING HOLES IN RECESSED SEAL

FIGURE 7-13B PUNCHING HOLES IN FLUSH SEAL

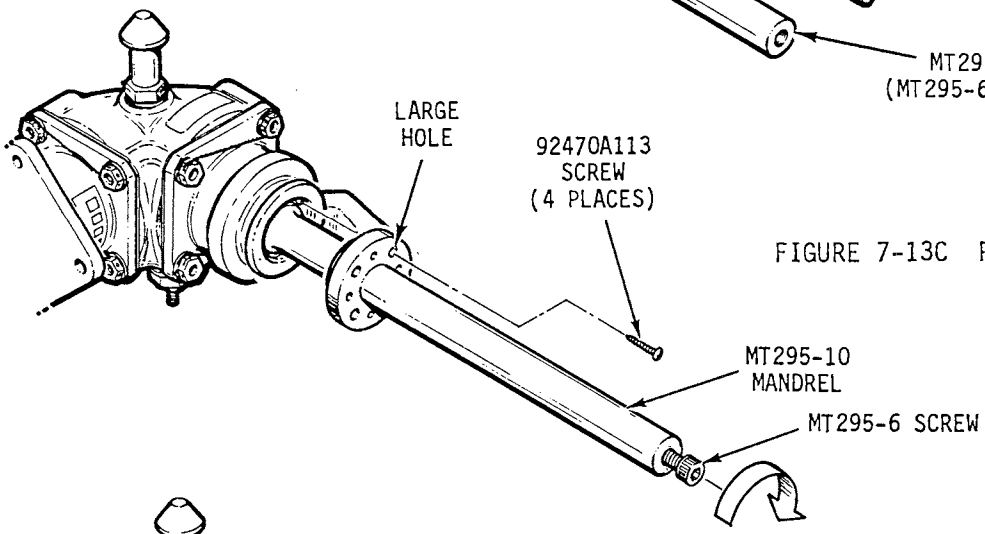

FIGURE 7-13C REMOVING SEAL

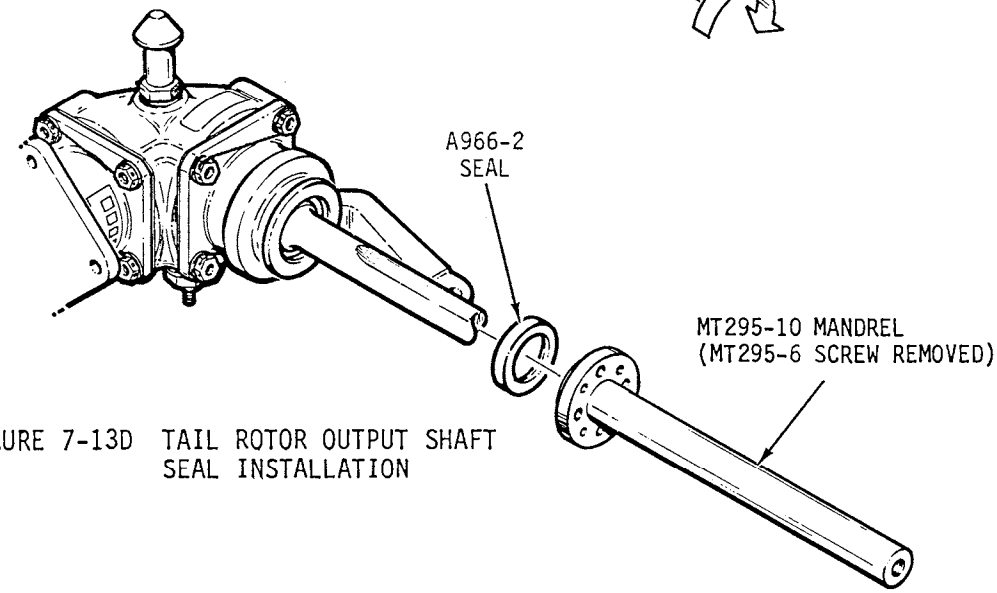

FIGURE 7-13D TAIL ROTOR OUTPUT SHAFT SEAL INSTALLATION

7.460 B021 Tail Rotor Gearbox Output Shaft Seal Replacement (cont'd)

10. Install pitch control per Section 8.562.

11. Install tail rotor per Section 9.212 or 9.213, as applicable.

12. Inspect for leaks after dynamically balancing tail rotor.

7.470 B021 Tail Rotor Gearbox Input Shaft Seal Replacement

1. Drain tail rotor gearbox lubricant.

2. Remove tailcone per Section 4.311

3. Remove tail rotor driveshaft per Section 7.310.

4. Remove aft flex plate from gearbox.

5. Remove nut & washer securing splined B546 input yoke on gearbox input shaft. Remove yoke.

6. Cut safety wire from B549 retainer and remove retainer and adjacent A117 shim from gearbox.

7. Remove and discard seal and o-ring from retainer.

8. Remove A266 spacer and underlying o-ring from input shaft. Discard o-ring.

9. Clean parts and inspect. Verify no grooves in A266 spacer, no scoring on A117 shim (such as from rotating), and no wear steps on input yoke & shaft splines.

10. Coat input shaft splines with B270-21 protectorant and allow to dry.

11. Press new A966 seal 0.030 inch deep beyond flush into chamfered inner end of B549 retainer, with solid side of seal toward opposite hexagonal end.

12. Prelubricate new o-ring with A257-2 lubricant and install in groove around B549 retainer.

13. Slide A117 shim over input shaft until it contacts input bearing outer race.

14. Prelubricate new o-ring with A257-2 lubricant and slide over input shaft until it contacts input bearing inner race.

15. Lubricate outside diameter of A266 spacer with A257-2 lubricant and slide it, inner-chamfered end first, over input shaft until spacer inner chamfer seats on o-ring.

16. Coat threads of B549 retainer with A257-9 anti-seize and install on gearbox. Torque retainer per Section 1.330 and safety wire.

17. Install input yoke on input shaft. Apply B270-11 adhesive to input shaft threads and install washer and nut. While adhesive is still wet, torque nut per Section 1.330 and torque stripe.

7.500 ACTUATOR ASSEMBLY

7.510 Actuator Removal

1. Remove tailcone fairing.
2. Full disengage clutch.
3. Remove fanwheel per Section 6.210.
4. Put a four-inch wood block under clutch shaft just forward of upper sheave on horizontal firewall. This keeps sheave from drooping and prevents damage to forward flex plate per Figure 7-8.
5. Disconnect two wiring connections to actuator.
6. Remove upper and lower NAS6604 bolts connecting actuator to bearings and remove actuator.

7.520 Actuator Installation

1. Refer to Figure 7-14. Connect actuator to A184 bearing and torque bolt per Section 1.320. Install palnut, torque per Section 1.320, and torque stripe per Figure 2-1.
2. Install lower attach bolt with head facing aft. Use one NAS1149F0432P washer under bolt head and one NAS1149F0463P washer under nut. Torque bolt per Section 1.320. Install palnut, torque per Section 1.320, and torque stripe per Figure 2-1. Remove wooden block.
3. Install fanwheel per Section 6.220.
4. Connect motor and switch assembly electrical leads.

CAUTION

Do not engage actuator without scroll installed.

7.530 Actuator Gearmotor Replacement

Actuator Gearmotor can be replaced with actuator on helicopter.

1. Disconnect motor electrical leads.
2. Cut safety wire from and remove four gearmotor attaching screws. Exercise care not to drop either safety wire or screws in V-belt sheaves.
3. Slowly slide motor assembly from housing. An unscrewing motion may be necessary.
4. Lightly lubricate worm gear on new gearmotor assembly with A257-1 grease before installing. Install O-ring onto motor nose piece.

7.530 Actuator Motor Replacement (cont'd)

5. Install new gearmotor into housing with wire leads pointing down. Verify no gap exists between housing and motor mounting flange before installing screws; do not use screws to draw gearmotor into housing as motor flange can break.

6. Secure gearmotor to housing with four mounting screws and safety wire with 0.020-inch diameter wire using single strand method.

7. Connect motor electrical leads. Engage clutch, listen for binding, and verify actuator fully tensions drive belts.

8. Seal all fasteners, seams and openings around gearmotor with B270-8 sealant.

9. Ty-rap gearmotor electrical leads as required.

CAUTION

Severe damage to actuator and drive belts can occur if gearmotor electrical leads are installed incorrectly in wiring connector (gearmotor will operate backwards and down-limit switch and spring switches will not shut off gearmotor current).

7.540 Actuator Adjustment

1. Engaged Limit

   The actuator engaged limit is determined by column springs which control drive belt tension. Column springs may only be adjusted by the factory.

2. Disengaged Down-Limit Adjustment (see Figure 7-15)

   The down-limit switch is activated by the down-limit stop screw which can be adjusted using long 3/8-inch open-end and ¼-inch box-end wrenches. Adjust down-limit stop screw to maintain proper belt deflection per Section 7.282 with actuator fully disengaged. Minimum clearance between screw heads at scissors is 0.005 inch.

3. Maximum Extension (see Figure 7-15)

   Maximum engaged extension is 1.85 inches measured between top of column spring block and bottom of screw housing. Drive V-belts must be replaced when maximum extension is encountered.

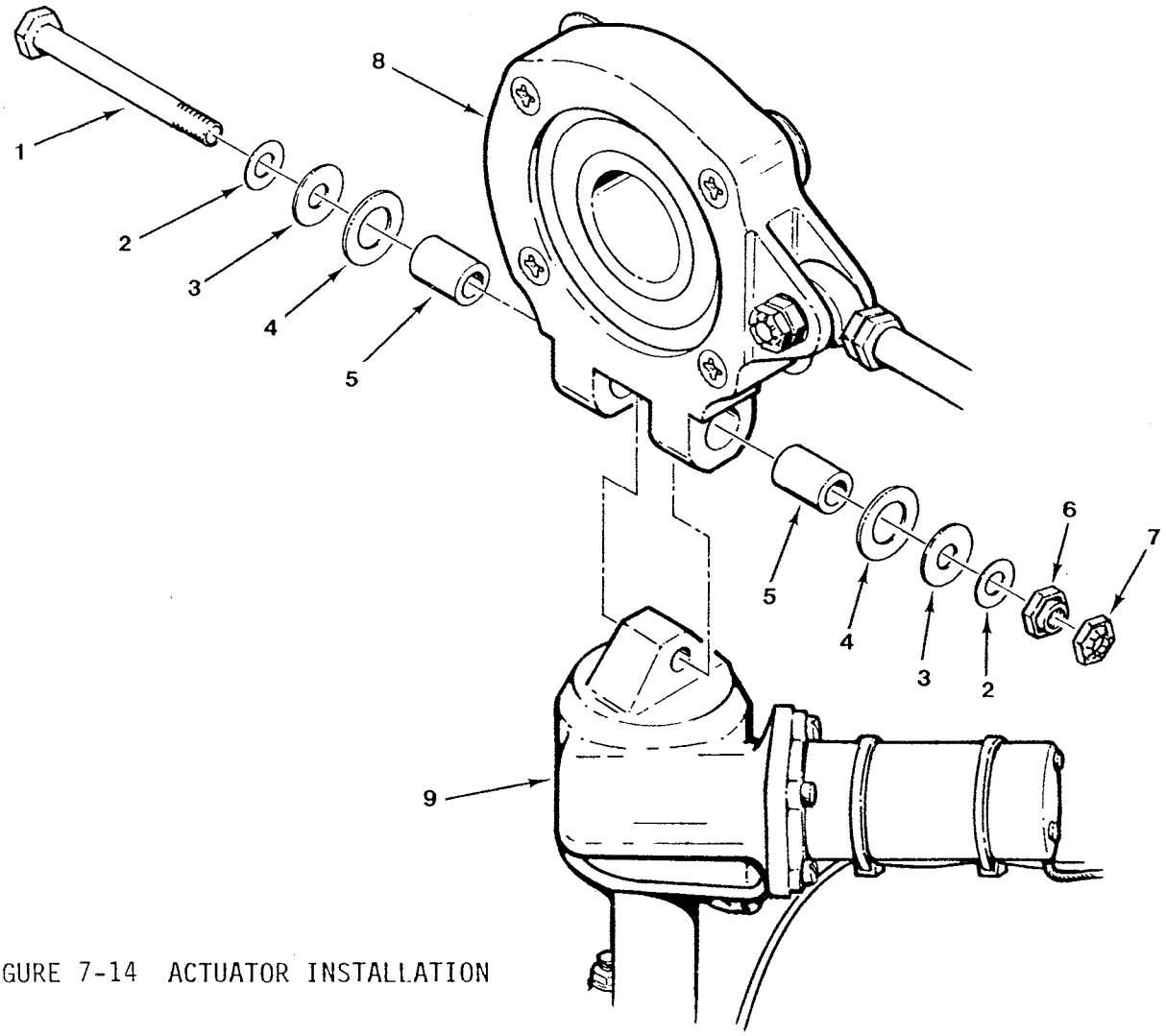

FIGURE 7-14 ACTUATOR INSTALLATION

NUMBER	PART NUMBER	DESCRIPTION
1	NAS1304-29	Bolt
2	AN960-416L	Washer
3	A141-3	Washer
4	A214-5	Thrust Washer (fabric)
5	A105-1	Journal
6	NAS679A4	Nut
7	B330-13	Palnut
8	A184-3	Upper Actuator Bearing
9	A051-1	Actuator

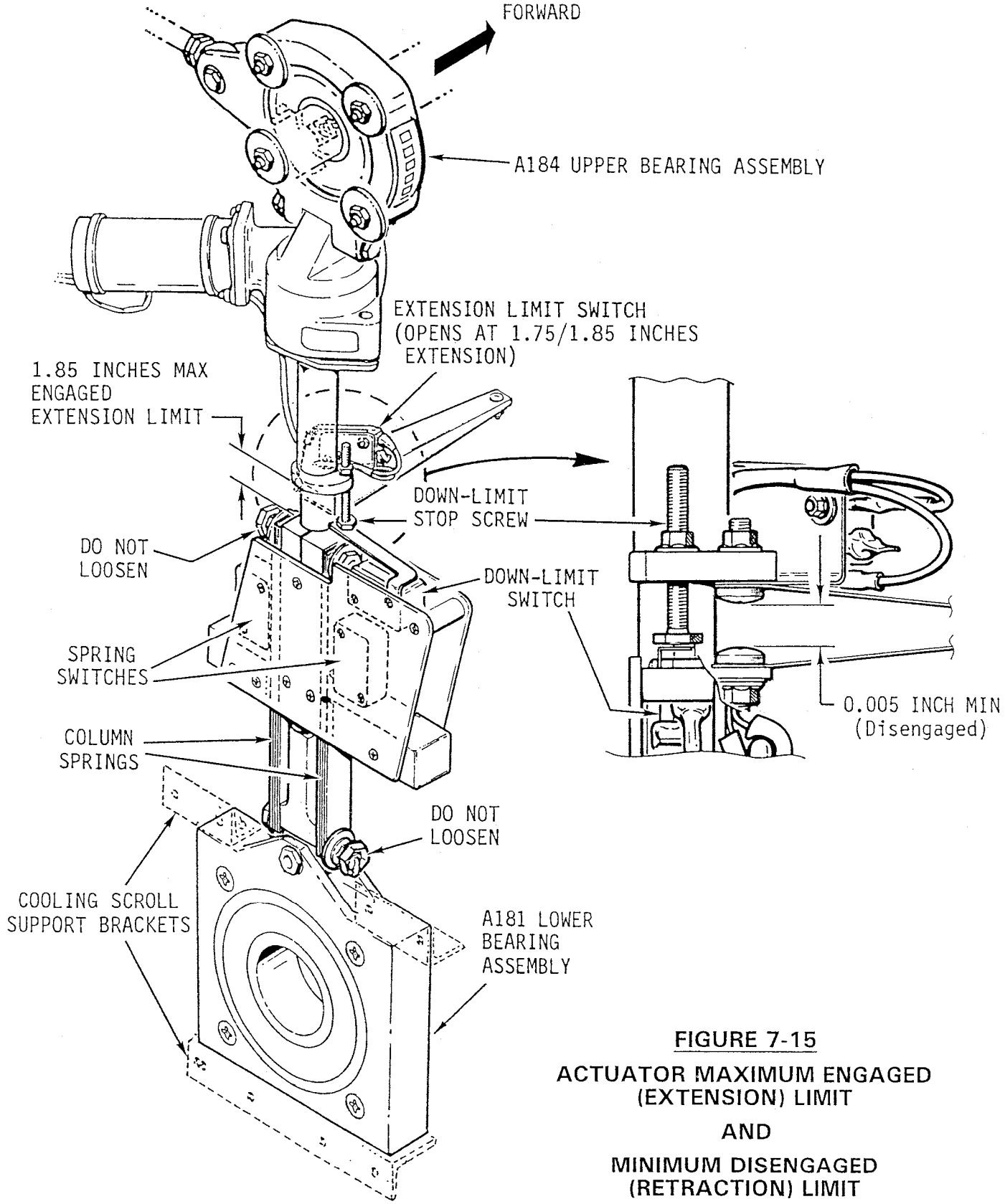

FIGURE 7-15

ACTUATOR MAXIMUM ENGAGED (EXTENSION) LIMIT

AND

MINIMUM DISENGAGED (RETRACTION) LIMIT

7.550 Switch and Fuse Replacement

7.551 Switch Replacement

1. Remove actuator from helicopter per Section 7.510.

> NOTE
>
> Switches may be replaced as a complete harness assembly or replaced individually by soldering wire connection and installing heat shrink.

2. Remove each switch by removing attaching screw, nut, washer, and spacing washers between switch and plate.

> NOTE
>
> Bond the four spacing washers to the new switch(es), if necessary, to ease reassembly.

3. Replace complete switch and wire harness assembly or, if installing a single switch, cut faulty switch from harness wiring. Cut wires as close to switches as possible.

4. Slide heat shrink over each cut wire. Solder wires to switch and install heat shrink over solder connection.

5. Reassemble switch(es) to plate. Two spacing washers are installed between switch and plate at each attach screw and one under nut. Do not over tighten screws or plastic switch housing may crack.

6. Reinstall actuator on helicopter per Section 7.520.

7.552 Fuse Replacement

An in-line fuse holder is installed in clutch actuator motor power circuit. Fuse holder is mounted on test switch panel. Replace fuse with 1.5 amp (AGC 1.5) fuse.

7.600 ROTOR BRAKE

7.610 Rotor Brake Removal

1. Remove tailcone cowling. Remove forward flex plate. Mark and record any shim washers installed between flex plate and main rotor gearbox input yoke and/or clutch shaft yoke.

> **WARNING**
>
> **A193 flex plates, which do not have bonded washers, are obsolete and must be replaced with A947 flex plates having bonded washers. If a bonded washer separates from an A947 flex plate, flex plate is unairworthy and cannot be repaired. Ensure A947-1 forward flex plate is Rev E or subsequent (identified by letter "E" or subsequent letter on two adjacent arms of flex plate both sides).**

2. Remove cotter pin and nut securing input yoke on main rotor gearbox. Remove yoke. Disconnect brake spring from firewall angle.

3. Disconnect cable from lever. Disconnect wiring to micro switch at three-pin connector.

4. Cut and remove safety wire, then remove three bolts securing rotor brake. Remove rotor brake assembly.

7.620 Rotor Brake Installation

1. Place rotor brake assembly over splined input pinion shaft of main rotor gearbox.

2. Place one each of two small (A130-41) spacers in place between rotor brake assembly and pinion end cover. Install one each NAS1149F0432P washer on three NAS1352-4H30P bolts. Insert first bolt through rotor brake assembly and A130-41 spacer. Insert second bolt through Hall Effect sender plate, rotor brake assembly and A130-41 spacer.

3. Insert third bolt through Hall Effect sender plate and long A130-41 spacer. Finger tighten three bolts into gearbox, then torque bolts per Section 1.330 and safety with 0.032 inch diameter safety wire. Attach spring to the firewall angle.

4. Coat splines of pinion shaft with B270-21 protectant before installing yoke. Place A908-4 yoke on pinion shaft. Install one each A141-10 washer and AN320-8 nut on pinion shaft. Torque nut per Section 1.330 as required to align castellations on nut with hole through pinion shaft. Do not exceed 410 in.-lbs. Install one MS24665-210 cotter pin.

5. Set Hall Effect sender-to-magnets gap per Section 7.141.

6. Attach cable to lever. Reconnect wiring to micro switch at three-pin connector.

7.620 Rotor Brake Installation

7. With brake engaged, adjust gap between NAS428-3-12 bolthead on B109-1 arm and A130-43 spacer to 0.030-0.035 inch. Lock adjustment by tightening MS21042L3 nut.

8. With brake in the released position, measure gap between B112-1 lever and B110-1 arm assembly. The gap measurement should be 0.030 - 0.170 inch. Adjust length of bead chain as required to obtain proper gap. One bead is approximately 0.150 inch.

9. Adjust micro switch to open and close at a gap of 0.20 - 0.30 inch between B112-1 lever and B110-1 arm.

10. Install forward flex plate.

11. Check clutch sheave alignment per Section 7.230.

12. Install intermediate flex plate per Section 7.330.

7.630 Rotor Brake Pad Replacement

1. Minimum pad thickness is 0.030 inch.

2. Brake pad replacement is accomplished by replacing B110-1 and B109-1 arm assemblies.

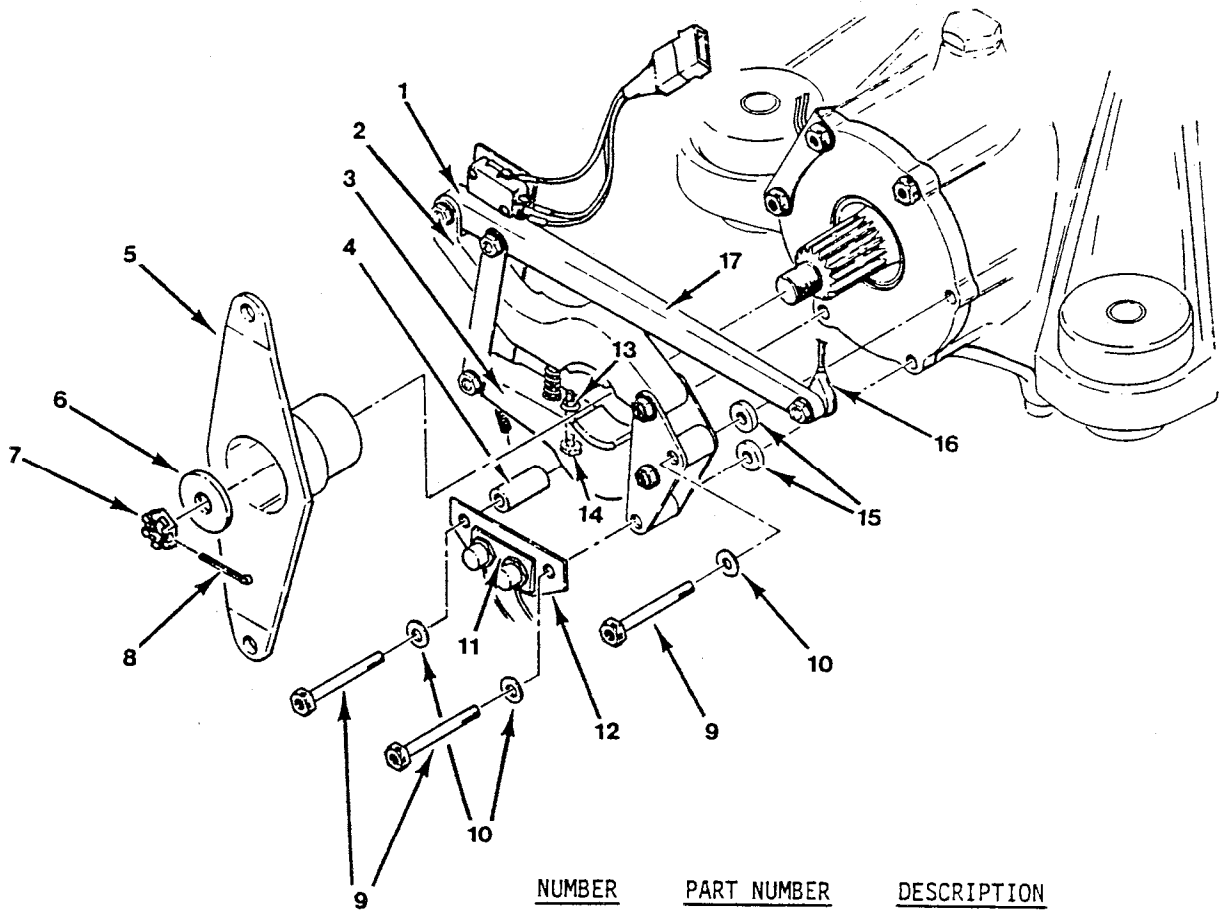

FIGURE 7-16 ROTOR BRAKE INSTALLATION

NUMBER	PART NUMBER	DESCRIPTION
1.	B033	Rotor Brake Assembly
2.	B110-1	Arm Assembly
3.	B109-1	Arm Assembly
4.	A130-43	Spacer
5.	A006-5	Yoke (Chrome Plated)
6.	A141-10	Washer
7.	AN320-8	Nut
8.	MS24665-210	Cotter Pin
9.	MS20074-04-15	Bolt
10.	AN960-416L	Washer
11.	B114-2	Blocks
12.	B114-1	Plate
13.	NAS1291-08	Nut
14.	NAS428-3-12	Bolt
15.	A130-42	Spacer
16.	B126-1	Actuating Cable
17.	B112-1	Lever

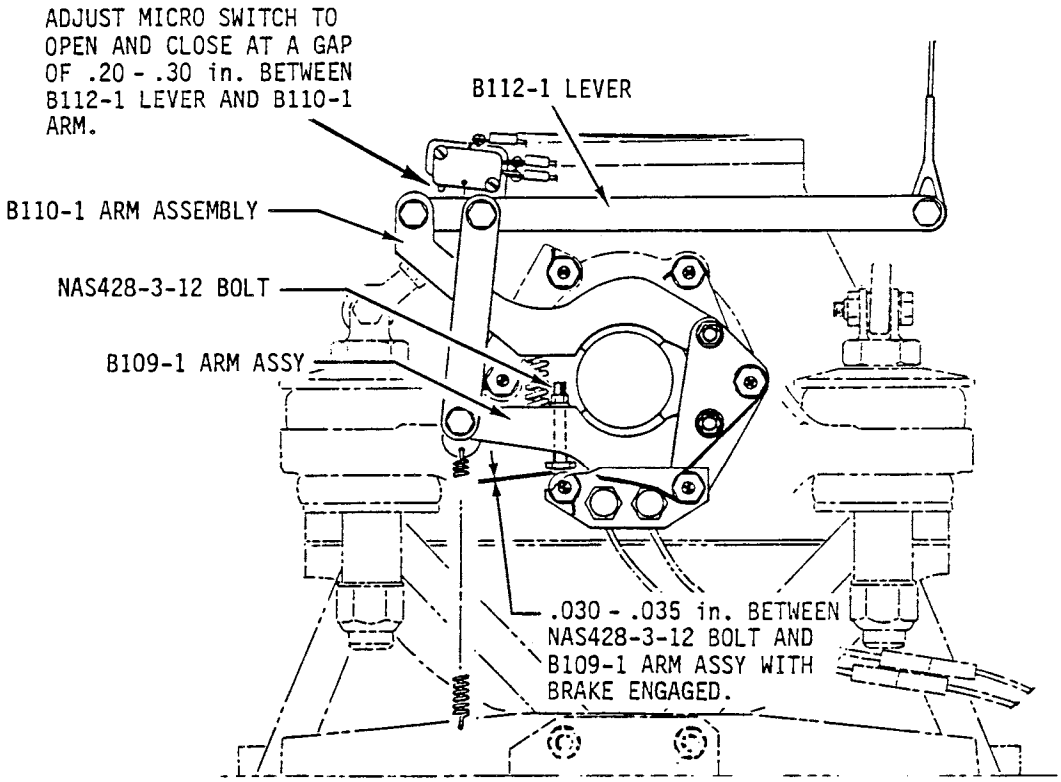

FIGURE 7-16A ROTOR BRAKE ADJUSTMENTS AND CLEARANCES

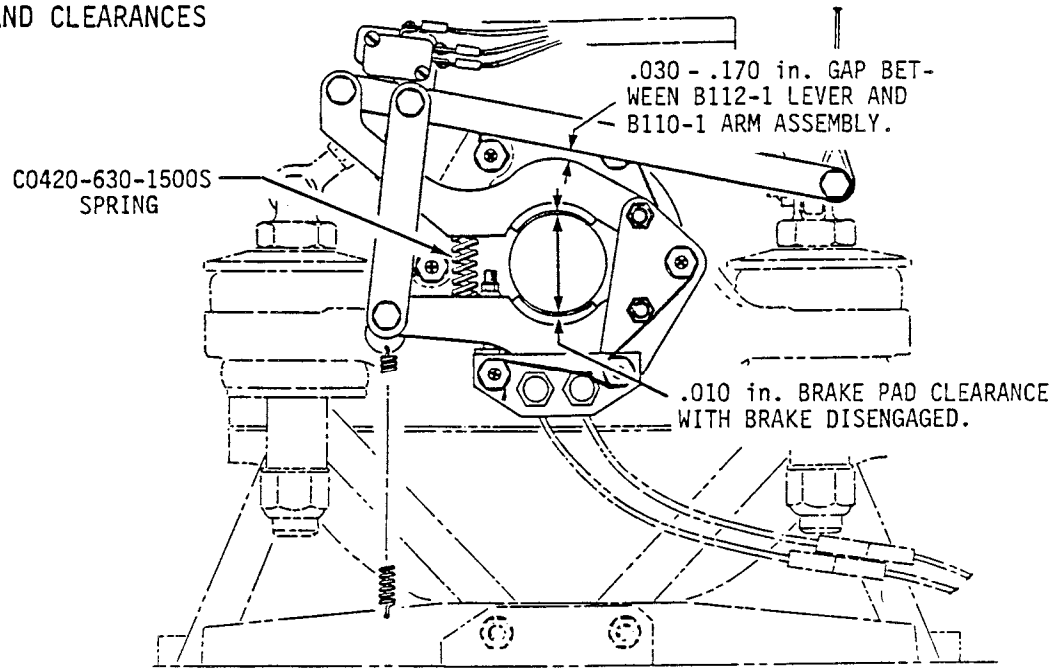

CHAPTER 8

FLIGHT CONTROLS

Section	Title	Page
8.000	Flight Controls	8.1
8.001	Introduction	8.1
8.002	Description	8.1
8.100	Cyclic Controls	8.1
8.110	Cyclic Assembly	8.1
8.111	Removal of Cyclic Assembly	8.1
8.112	Installation of Cyclic Assembly	8.4
8.120	Cyclic Grip Assembly	8.7
8.121	Removal of Cyclic Grip Assembly	8.7
8.122	Installation of Cyclic Grip Assembly	8.8
8.130	Cyclic Lateral (Right) Trim	8.10
8.131	Right Trim Spring Assembly Removal	8.10
8.132	Right Trim Spring Assembly Installation	8.10
8.133	Right Trim Spring Replacement and Shimming	8.11
8.140	Cyclic Longitudinal (Fore-Aft) Elastic Trim Cord	8.15
8.141	Longitudinal Trim Cord Removal	8.19
8.142	Longitudinal Trim Cord Installation	8.19
8.150	Cyclic Friction Assembly	8.20
8.151	Cyclic Friction Adjustment	8.20
8.160	A121-7 Push-Pull Tube	8.21
8.161	A121-7 Push-Pull Tube Removal	8.21
8.162	A121-7 Push-Pull Tube Inspection/Repair	8.21
8.163	A121-7 Push-Pull Tube Sleeve Installation	8.22
8.164	A121-7 Push-Pull Tube Sleeve Inspection	8.22
8.165	A121-7 Push-Pull Tube Installation	8.23
8.200	Collective Control	8.25
8.210	Collective Stick Assembly	8.25
8.211	Collective Stick Removal	8.25
8.212	Collective Stick Installation	8.26
8.220	Collective Spring Assembly	8.30
8.221	Collective Spring Removal	8.30
8.222	Collective Spring Installation	8.32
8.223	Collective Spring Adjustment for A038-1 thru -4 Assembly	8.33
8.224	Collective Spring Adjustment for A038-5 and -6 Assembly	8.34

CHAPTER 8

FLIGHT CONTROLS (Continued)

Section	Title	Page
8.225	Collective Friction Adjustment	8.34
8.230	RPM Governor System	8.34A
8.231	Governor Controller Removal	8.34A
8.232	Governor Controller Installation	8.34A
8.233	Governor Assembly Removal	8.34A
8.234	Governor Assembly Installation	8.34C
8.239	Governor Troubleshooting	8.34C
8.300	Jackshaft and Support Struts	8.35
8.310	Jackshaft	8.35
8.311	Jackshaft Removal	8.35
8.312	Jackshaft Installation	8.35
8.320	Strut Assembly (Jackshaft Support)	8.35
8.321	Strut Removal	8.35
8.322	Strut Installation	8.38
8.400	Swashplate and Main Rotor Pitch Links	8.39
8.410	Swashplate	8.39
8.411	Swashplate Removal	8.39
8.412	Swashplate Installation	8.40
8.413	(Reserved)	
8.414	(Reserved)	
8.415	(Reserved)	
8.416	Shimming Upper (Unflanged) Spherical Sleeve with Aluminum Ball	8.48
8.500	Tail Rotor Controls	8.48
8.510	Tail Rotor Pedals	8.48
8.511	Tail Rotor Pedal Removal	8.48
8.512	Tail Rotor Pedal Installation	8.52
8.520	A317-1 Lower Bellcrank	8.52
8.521	A317-1 Lower Forward Bellcrank Removal	8.52
8.522	A317-1 Lower Forward Bellcrank Installation	8.53
8.530	A316-1 Upper Bellcrank	8.55
8.531	Bellcrank Removal	8.55
8.532	Bellcrank Installation	8.55
8.540	A331-4 Intermediate Bellcrank	8.56
8.541	Bellcrank Removal	8.56

CHAPTER 8

FLIGHT CONTROLS (Continued)

Section	Title	Page
8.542	Bellcrank Installation	8.57
8.550	A120-3 Aft Bellcrank	8.57
8.551	Bellcrank Removal	8.57
8.552	Bellcrank Installation	8.57
8.560	A031-1 Pitch Control	8.57
8.561	Pitch Control Removal	8.57
8.562	Pitch Control Installation	8.57
8.570	Tail Rotor Pitch Links	8.58
8.571	Tail Rotor Pitch Link Removal	8.58
8.572	Tail Rotor Pitch Link Installation	8.58
8.600	A203 Yoke and A205 Fork Assemblies	8.60
8.610	Bearing Removal	8.60
8.615	C648-2 Bearing Installation	8.60
8.620	A139-1 Bearing Installation	8.60
8.630	B115-1 Bearing Installation	8.62
8.640	Yoke and Fork Assembly Installation	8.63

Intentionally Blank

CHAPTER 8

FLIGHT CONTROLS

8.000 Flight Controls

8.001 Introduction

This section covers removal and installation procedures for cyclic controls, collective controls, tail rotor controls and their related components.

WARNING

Assembly of flight controls is critical and requires inspection by a qualified person. If a second person is not available, the installer must take a 5-minute break prior to inspecting flight control connections he has assembled.

8.002 Description (See Figures 8-1 and 8-2)

Dual controls are standard equipment and all primary controls are actuated through push-pull tubes and bellcranks. Bearings used throughout the control system are either sealed ball bearings or have self-lubricated Teflon liners.

Flight controls are conventional. The cyclic stick appears to be different but the grip moves the same as in other helicopters due to the free hinge at the center pivot. The cyclic grip is free to move vertically, allowing the pilot to rest his forearm on his knee if he chooses.

The collective stick is also conventional with a twist grip throttle control. When the collective is raised, the throttle is opened by an interconnecting linkage. An electronic governor makes minor throttle adjustments required to maintain RPM.

8.100 Cyclic Controls

8.110 Cyclic Assembly

8.111 Removal of Cyclic Assembly

a. Remove left seat back, center horizontal and vertical panels.

b. Remove collective assembly per § 8.211.

c. Remove screws holding mixture and carburetor heat control cable covers to cyclic box cover.

d. Remove roll pin from cyclic friction knob and remove knob.

e. Unscrew right trim knob from trim shaft.

f. Remove screws holding cyclic box cover to cyclic box and to side panels.

g. Lift cyclic box cover and disconnect post light wire.

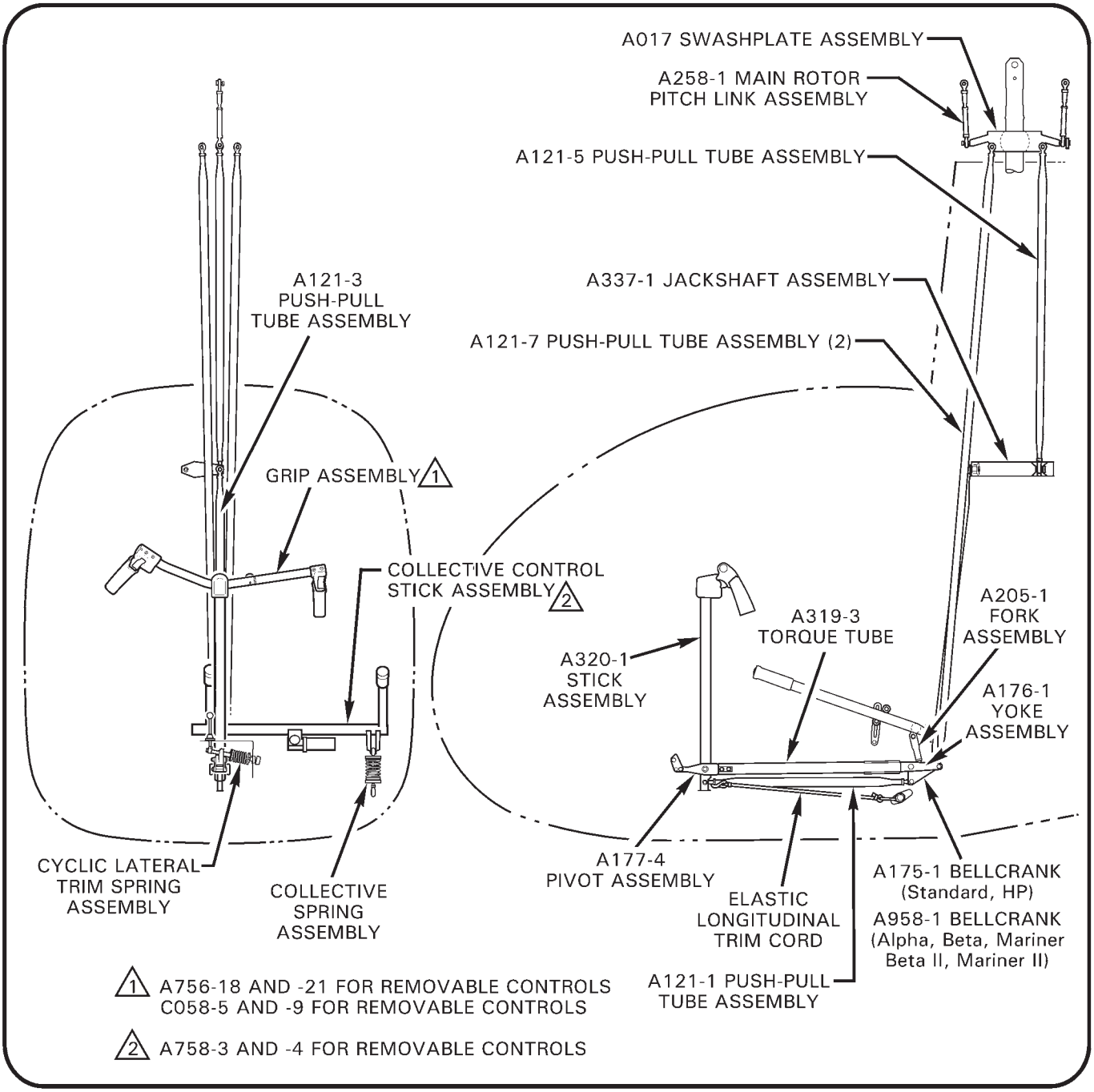

FIGURE 8-1 MAIN ROTOR FLIGHT CONTROLS

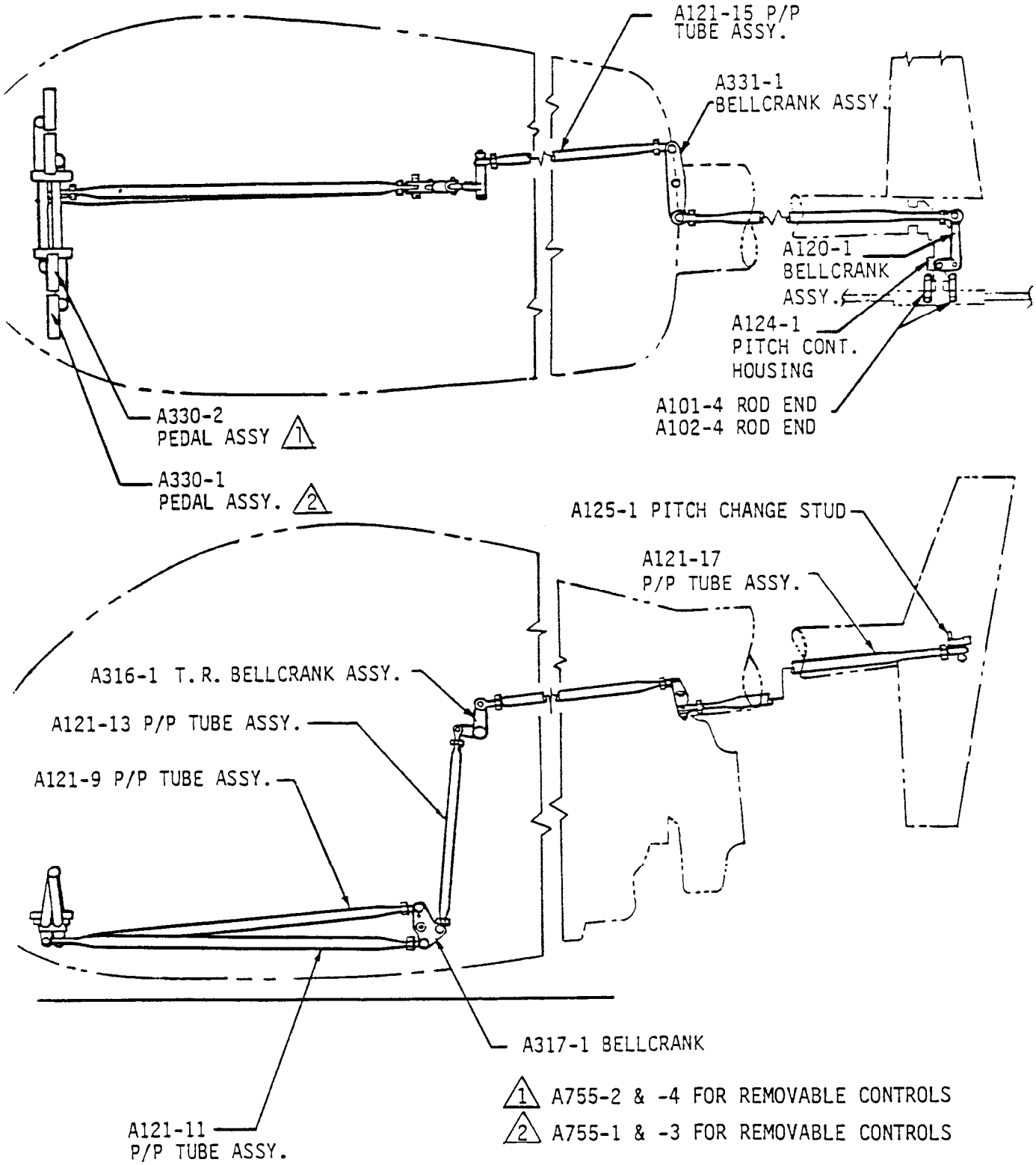

FIGURE 8-2 TAIL ROTOR FLIGHT CONTROL

8.111 Removal of Cyclic Assembly (cont'd)

h) Remove screws holding cyclic box assembly to the keel panels.

NOTE

Unscrew from nutplate but DO NOT remove the two cyclic friction attach bolts or friction spacers may fall out.

IF FIREWALL PLUG INSTALLED FOLLOW STEPS i AND j

i) Move cyclic stick full fwd. and disconnect bolt holding the A127-3 rod end to the aft fork of the cyclic pivot.

j) Remove stainless steel hole plug from rt. side of vertical firewall. Remove bolt holding the A121-7 P-P tube rod ends to the aft fork of the cyclic pivot.

IF FIREWALL PLUG NOT INSTALLED FOLLOW STEPS k AND l (PLUG CAN BE INSTALLED FOLLOWING INSTRUCTIONS IN RHC KIT # KI-21).

k) Disconnect both forward push-pull tubes from the swash-plate and the forward push-pull tube from the jackshaft.

l) Unscrew the three push-pull tubes from the rod ends attached to the aft end of the cyclic assembly.

m) Disconnect 6-pin electrical connection at bottom of stick.

n) Remove cyclic assembly from rotorcraft,

8.112 Installation of Cyclic Assembly.

WARNING

Rigging must be checked if the following has occurred:

1. Replacement of the cyclic assy.
2. Replacement of the A338-1 cyclic box or A320-1 cyclic stick.
3. Replacement or change of A205-1 Yoke (between collective and cyclic).
4. If the rod ends have been removed from the push-pull tube or push-pull tube length was changed on the A121-1,-3,-5 or -7 push-pull tubes.
5. Jackshaft support length is changed.

8.112 Installation of Cyclic Assembly (cont'd)

NOTE

On cyclic installation ensure right trim end cap fits flush into left keel panel hole. Ensure cyclic friction stackup is not misaligned and the friction is on, to hold stackup in place.

a) Install cyclic assembly. Attach cyclic box to keel panels.

NOTE

Ensure friction assembly clears all wires on installation.

b) Attach cyclic friction assembly to cabin. Torque NAS1030 attach bolts to 40 in-lbs. plus locking torque.

IF P-P TUBE ROD ENDS DISCONNECTED FROM FORK USING PLUGGED HOLE IN FIREWALL,FOLLOW STEP c) AND d).

c) Attach the A121-7 P-P tubes to the fork of the cyclic pivot. Install the A115-1 spacers outboard of the rod ends and the long spacer in between, torque nut and install palnut.

d) Move cyclic stick full fwd and connect A121-3 P-P tube to the cyclic stick fork bellcrank. Spacers to be installed on each side of rod end, lockwasher under the nut and torque.

WARNING

Smaller diameter of the A115-1 spacer must be against the rod end ball.

IF FIREWALL PLUG NOT INSTALLED, FOLLOW STEPS e) and f).

e) Screw the A121-3 P-P tube onto the aft rod end of the A175 bellcrank assembly. (See Figure 8-3)

f) Screw the two A121-7 P-P tubes onto the two aft rod ends attached to the cyclic fork.

NOTE

No palnut required on rod end of A205 fork

g) If A205-1 fork was removed from forward rod end of A175 bellcrank, screw the fork onto the rod end to 3.45 inches from center of rod end hole to center of attaching bolt hole. (See Figure 8-3)

h) Install collective stick (standard or removable) (See Section 8.212).

i) Attach the A205-1 yoke connecting the cyclic stick assembly and the collective stick assembly. (See Section 8.212)

j) Connect A121-3 P-P tube to the jackshaft. (See Section 8.312)

k) Connect both A121-7 P-P tubes to the swashplate. (See Section 8.412).

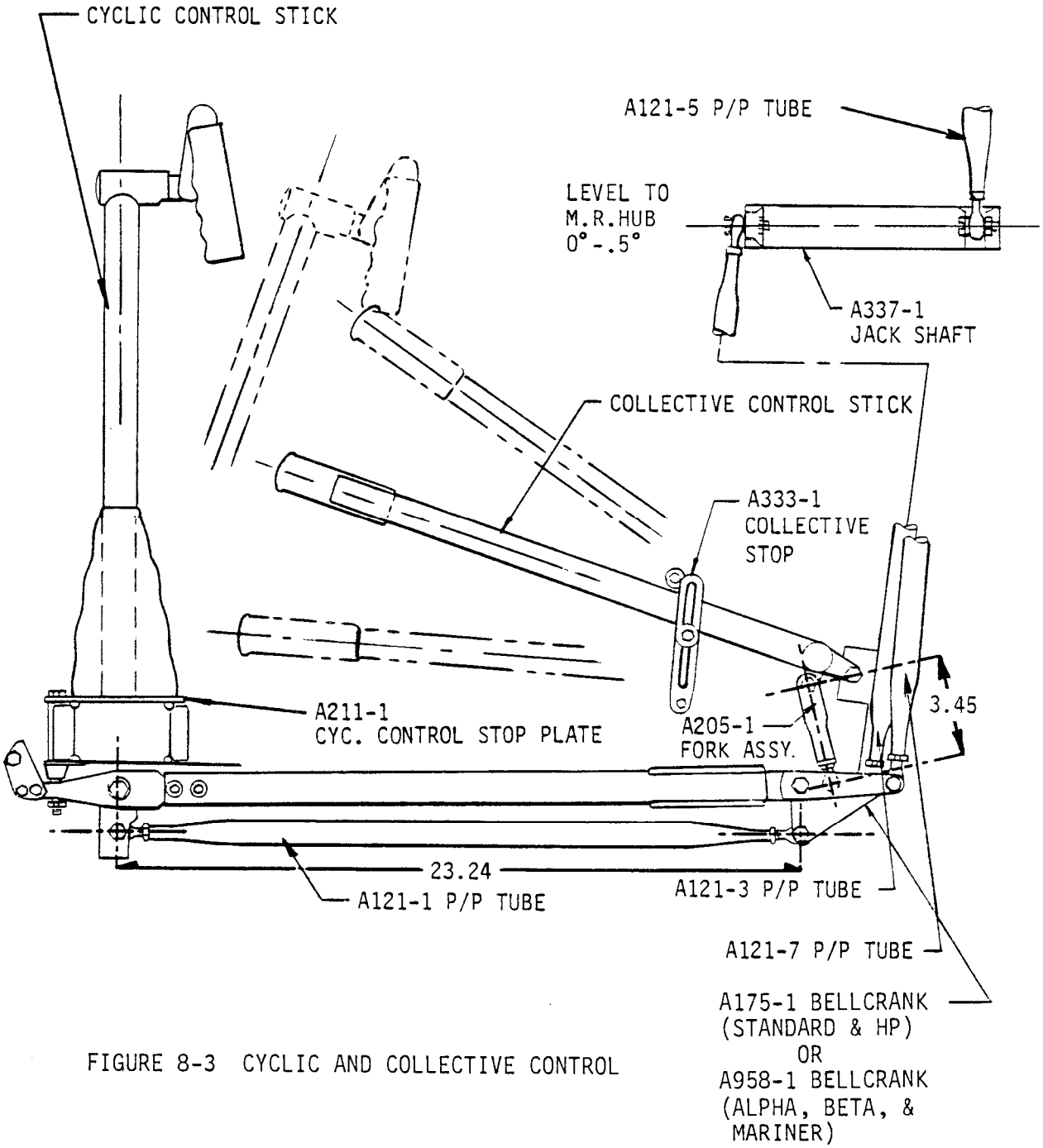

FIGURE 8-3 CYCLIC AND COLLECTIVE CONTROL

8.112 Installation of Cyclic Assembly (cont'd)

j) Install cyclic box cover.

1. Connect post lightwire and ty-rap clear of controls.

2. Insert right trim shaft through cover and install knob.

3. Attach power plant controls to the cyclic box cover.

4. Install cyclic box cover and tighten the attaching screws.

k) Install cyclic friction knob.

See Section 8.150 for adjusting cyclic friction assembly.

l) Move flight controls throughout complete travel. Verify no binding or clearance problems.

m) Rig flight controls per Section 10.000.

WARNING

Ensure all jamnuts and attaching hardware has been torqued per Section 1.300 Fastener Torques.

n) Install all seat backs and inspection covers.

8.120 Cyclic Grip Assembly (Standard or Removal)

8.121 Removal of Cyclic Grip Assembly.

This may be accomplished, if necessary, without removal of complete cyclic assembly from rotorcraft.

a) Remove bottom center inspection panel. Disconnect 6-pin connector and use pin extractor to remove the pins from the connector.

8.121 Removal of Cyclic Grip Assembly (cont'd)

b) Remove end cap from the cyclic grip pivot.

c) Remove cotter pin, nut and A141-14 washer.

d) Gently tap cyclic grip shaft (DO NOT damage threads) and remove cyclic grip assembly from A320-1 stick.

NOTE

DO NOT damage bearings in removal.

NOTE

The six wires are grouped into two sets of three wires each on the bottom right side of the cyclic stick with heat shrink around all six to prevent chafing.

e) Remove the heat shrink and attach two pieces of 0.032" or 0.020" safety wire. One piece of safety wire on one of the wires in each group. Pull each wire group out of the stick, but leave the two pieces of safety wire protruding from each end.

8.122 Installation of Cyclic Grip Assembly (Standard or Removable)

a) Cyclic grip assembly may be installed without removal of complete cyclic box assembly from rotorcraft.

NOTE

Mark wire numbers near pins for later re-installation.

1. Remove bottom center belly panel.
2. Remove pins from connector.

NOTE

Rigging check not required after cyclic grip installation.

b) Ensure rollpin is installed in the grip assembly. Heat shrink and two grommets should already be installed over the six wires coming out of the grip assembly.

8.122 Installation of Cyclic Grip Assembly (cont'd)

NOTE

The six wires are to be grouped into two sets of three wires each. One group will extend through the forward right side of the cyclic stick and the other will extend through the aft right side.

c) Using two pieces of safety wire extending from the top aft electrical hole in the cyclic, one through the bottom right forward side of the stick and the other through the bottom right aft side, stagger and tape three wires onto each safety wire. Carefully pull the safety wire and wires through the cyclic stick.

d) Attach heat shrink around all six wires and slide shrink tubing into stick as far as possible to prevent chafing.

e) Reinstall pins on each wire into proper position connector.

Housing Pin Location	1	2	3	4	5	6
Standard Cyclic Wires	231	232	233	234	235	236
Removable Cyclic Wires	277	280	281	234	235	236

f) Reconnect the cyclic wiring connector.

g) Slide grip assembly into bearings in stick assembly. Install A141-14 washer and castellated nut.

CAUTION

Secure nut until there is no axial movement of bearings and cylic grip assembly. DO NOT overtighten assembly as it will damage the bearings.

h) Install cotter pin and end cap.

i) Install bottom rotorcraft inspection panels.

8.130 Cyclic Lateral (Right) Trim

The function of the cyclic lateral trim spring is to remove the left stick force in cruise conditions. It is actuated by pulling up on the black knob located forward of the cyclic stick. The trim spring (two sizes available) may be changed or shimmed to create the force necessary to balance the cyclic control laterally. This usually is required after a main rotor blade change. Use the following procedures to remove, change, shim and replace the trim spring assembly:

8.131 Right Trim Spring Assembly Removal

a) Remove right trim knob.

b) Remove cyclic friction knob.

c) On the in-flight adjustable lateral trim assemblies, remove the lateral trim adjustment knob located on the left side of the console.

d) Remove four (4) attaching screws holding the power-plant control cables (mixture and carb heat).

e) Remove cyclic box cover attaching screws.

f) Disconnect cyclic box cover post light at disconnect.

g) Disconnect right trim assembly attach bolt.

h) Firmly grasp the spring assembly, tip the cyclic stick to the right to relieve some of the spring pressure. Pull up and to the right to remove the assembly.

8.132 Right Trim Spring Assembly Installation

a) Move the cyclic stick to the right to relieve some of the spring tension for installation. Firmly grasp the spring assembly and insert the right trim spring cap flush into the left keel panel while installing the spring assembly. Pivot into the cyclic stick pivot forks.

b) Install bolt to connect assembly. Torque attaching nut to 100 in.-lbs plus nut drag.

c) Connect cyclic cover post light wire and ty-rap clear of moving controls.

d) Install cyclic box cover to airframe. Tighten all attaching screws.

8.132 Right Trim Spring Assembly Installation (cont'd)

e) Tighten four attaching screws holding the powerplant control cables (mixture & carb heat).

f) Install right trim knob.

g) Install cyclic friction knob. Install rollpin and safety wire.

h) On the in-flight adjustable lateral trim assemblies, install the adjustment knob on the trim assembly shaft located on the left side of the console.

8.133 Right Trim Spring Replacement & Shimming (See Fig. 8-4)

a) Spring Replacement

1. Remove the right trim assembly per Section 8.131.

2. Remove the cotter pin from the clevis pin.

3. Squeeze the spring and remove the clevis pin.

4. Remove the A581-1 arm, A588-1 spacer, and A583-1 spring cap.

5. Replace the spring as indicated by flight testing.

NOTE

Changing of the trim spring will create a large change in trim. Shimming of the springs may be required to obtain the desired trim forces.

On the in-flight adjustable lateral trim assemblies, remove the A584-1 bearing support and A130-46 spacer. Remove the A583-2 cap by unscrewing it from the assembly shaft.

6. Reinstall the A581-1 spring cap, A588-1 spacer, and A583-1 arm.

7. Install the clevis pin and cotter pin.
On the in-flight adjustable lateral trim assemblies, install the A583-2 cap on the shaft, then the A130-46 spacer, then the A584-1 bearing support.

8. Install the right trim assembly per Section 8.132.

NUMBER	PART NUMBER	DESCRIPTION
1	4901-1032	Knob
2	A587-1	Stem
3	A589-1	Guide
4	A586-1	Fork
5	MS24665-138	Cotter Pin
6	MS20392-1C13	Pin
7	AN960-4	Washer
8	A585-1	Shaft
9	A581-1	Arm
10	A588-1	Spacer
11	A583-1	Cap
12	A618-1 or -2	Spring
13	AN960-416 or 416L	Washers (As required for shimming)
14	5100-25	Retaining Ring (Circlip)
15	A104-3	Bearing
16	A584-1	Bearing Support
17	NAS1303-18	Bolt
18	AN960-416L	Washers
19	A582-1	Plate
20	AN960-10L	Washers
21	NAS679A3	Nut
22	A177-1	Pivot
23	NAS1304-17	Bolt
24	NAS1291-4	Nut
25	A587-2	Stem
26	52-022-094-0625	Roll Pin
27	A585-2	Shaft
28	ABYT4	Bearing
29	MS24665-132	Cotter Pin
30	A586-2	Fork
31	NAS1352-08LE6	Screw
32	A583-2	Cap
33	B160-1	Pin
34	AN340-8	Nut
35	NAS1291-08	Nut
36	A130-46	Spacer
37	A130-45	Spacer
38	AN960PD10L	Washer
39	A483-1	Knob

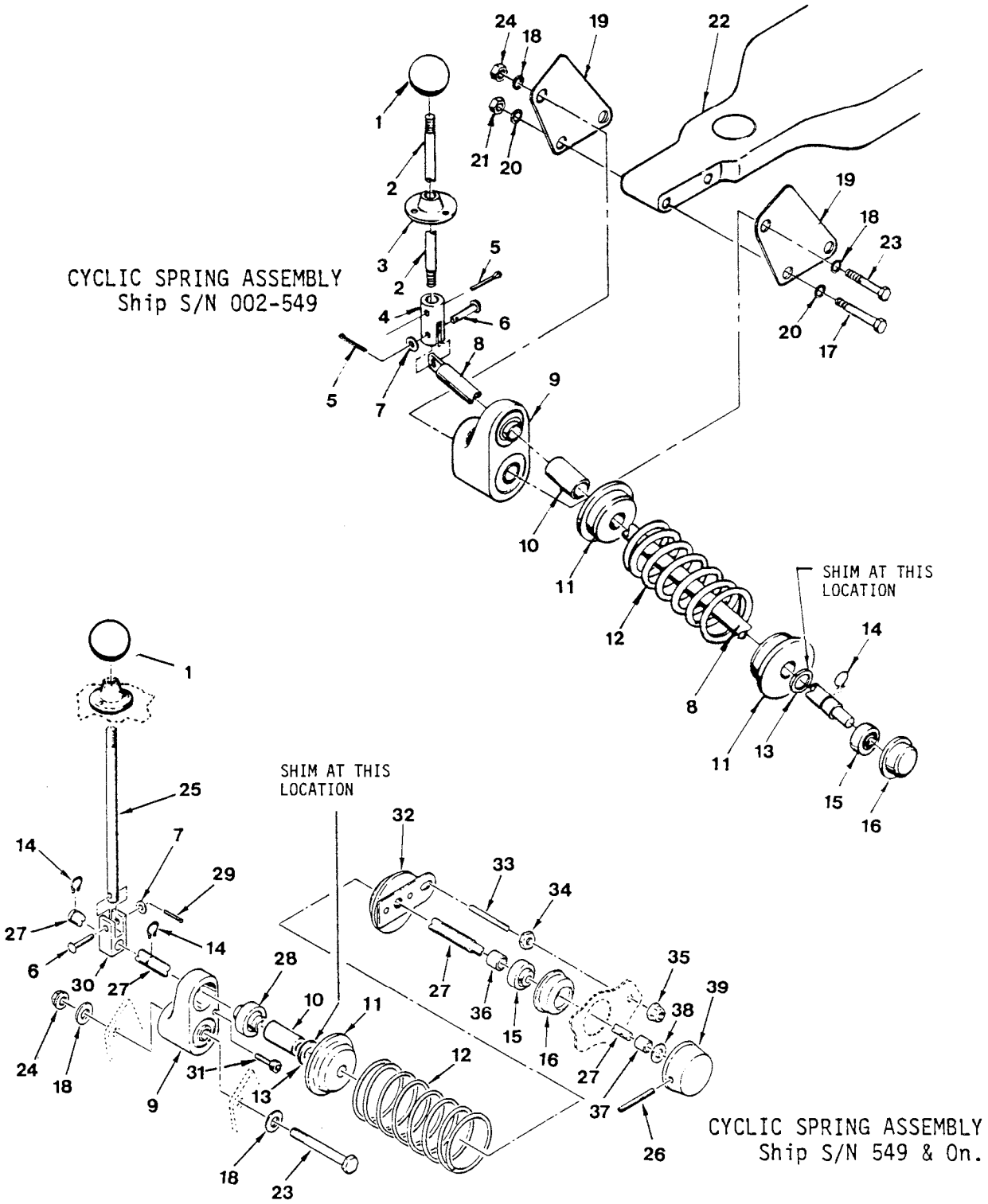

FIGURE 8-4 RIGHT TRIM ASSEMBLY

b) Shimming Right Trim Spring (See Fig. 8-4)

1. Remove the right trim assembly per Section 8.131.

2. Remove the trim spring per Section 8.133.

3. Slide the A583-1 lower spring cap off the rod.

4. Install shim washers between the A583-1 lower spring cap and circlip as necessary to adjust trim force. On the in-flight adjustable lateral trim assemblies, remove A584-1 bearing support, the A130-46 spacer, the A583-2 cap, the A618 spring and the A583-1 cap. Install shims between the A588-1 spacer and the A583-1 cap.

NOTE

When shimming the A618-1 (primer colored) spring (10.7 lb-in.) the maximum allowable shimming is (8) AN960-416 washers. When shimming the A618-2 (black colored) spring (14.5 lb-in.) the maximum allowable shimming is (5) AN960-416 washers.

NOTE

On the in-flight adjustable lateral trim assemblies, only the B056-1 assembly with the primer (green) colored spring may be shimmed. The maximum number of shims is 3 AN960-416 washers. The B056-2 adjustable lateral trim assembly with the black colored spring must not be shimmed.

CAUTION

Shimming in excess of that indicated in the above NOTES will cause the trim springs to bottom preventing full left cyclic travel.

5. Slide the A583-1 lower spring cap, spring, A583-1 uppercap, A588-1 spacer, and A581-1 arm onto the rod. See Figure 8-4C.

6. Install the clevis pin and cotter pin.

7. Reinstall the trim spring assembly per Section 8.132.
On the in-flight adjustable lateral trim assemblies, after the shims have been installed, reinstall the A583-1 cap, the A618 spring, the A583-2 cap, the A130-46 spacer, and the A584-1 bearing support.

8.140 Selecting Longitudinal Elastic Trim Cord

The Elastic Trim Cord is used to cancel out most longitudinal stick forces during cruise flight.

If the cyclic grip moves forward in cruise flight, a weaker elastic trim cord is required. If the cyclic stick grip moves aft in cruise flight, a stronger elastic trim cord is required.

a) Remove the elastic trim cord per Section 8.141 and determine the strength of that cord; either by the I.D. tag attached or by the diameter of the cord and the length of cord from inner lock ring of one end to inner lock ring at the other end.

NOTE

The R22 parts catalog lists the elastic trim cords by part number and dash numbers also length, diameter and (force) load when installed.

b) Following the statement above, and the amount of additional force required to keep the cyclic centered for level cruise flight, select an appropriate elastic trim cord.

c) Install per Section 8.142.

d) Test fly helicopter to determine if proper cord was selected; repeat above procedure as required to find cord which will balance longitudinal cyclic stick forces.

This page intentionally left blank.

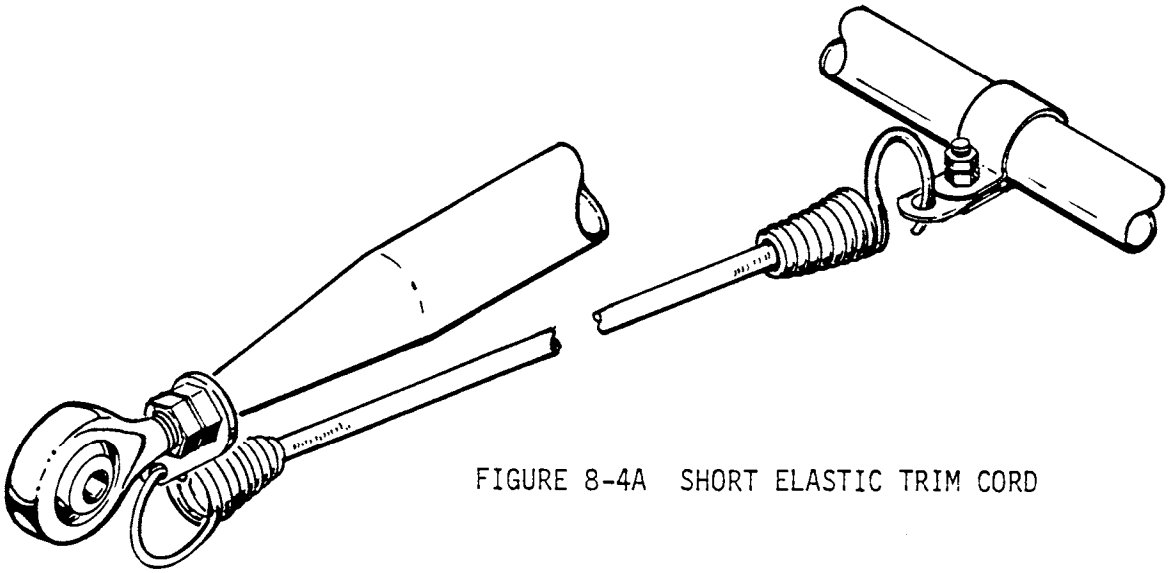

FIGURE 8-4A SHORT ELASTIC TRIM CORD

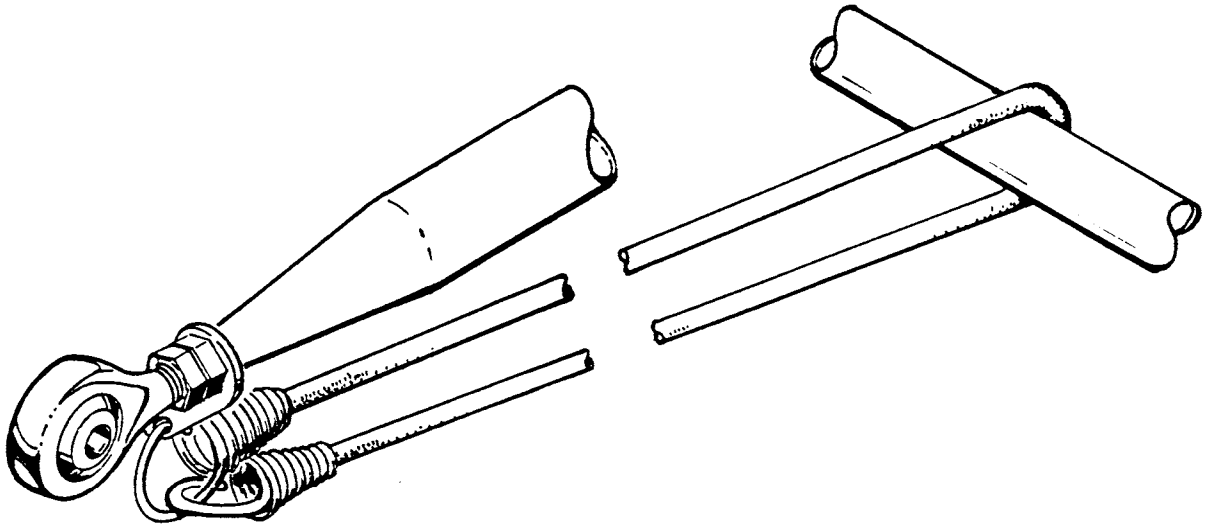

FIGURE 8-4B LONG ELASTIC TRIM CORD

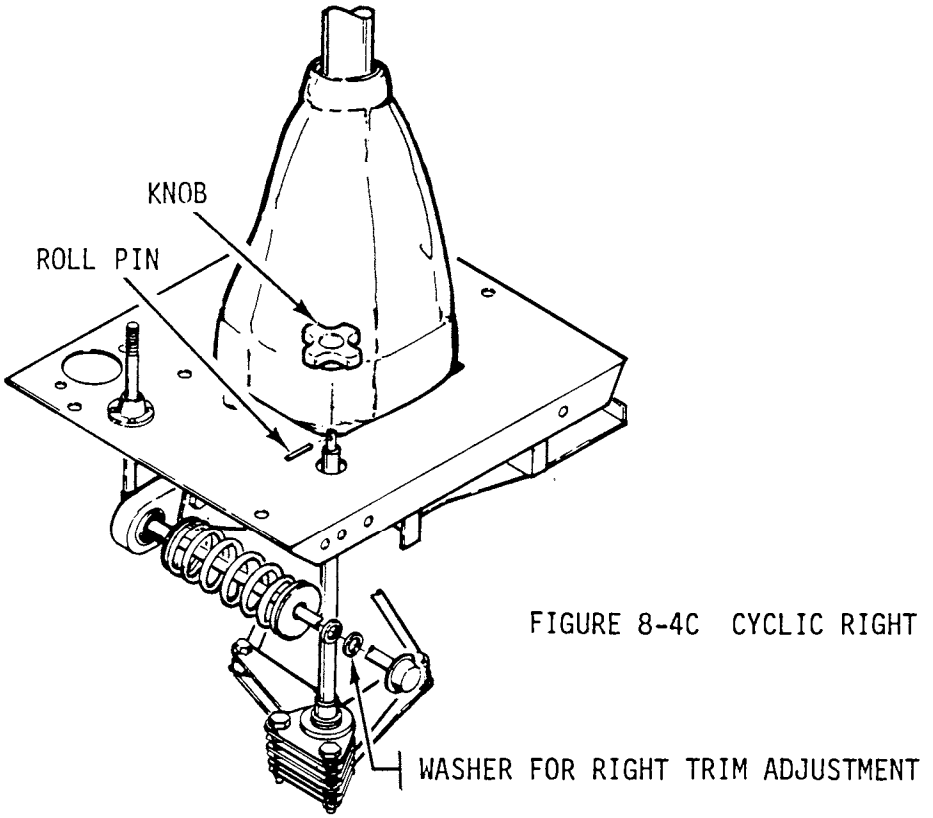

FIGURE 8-4C CYCLIC RIGHT TRIM ADJUSTMENT

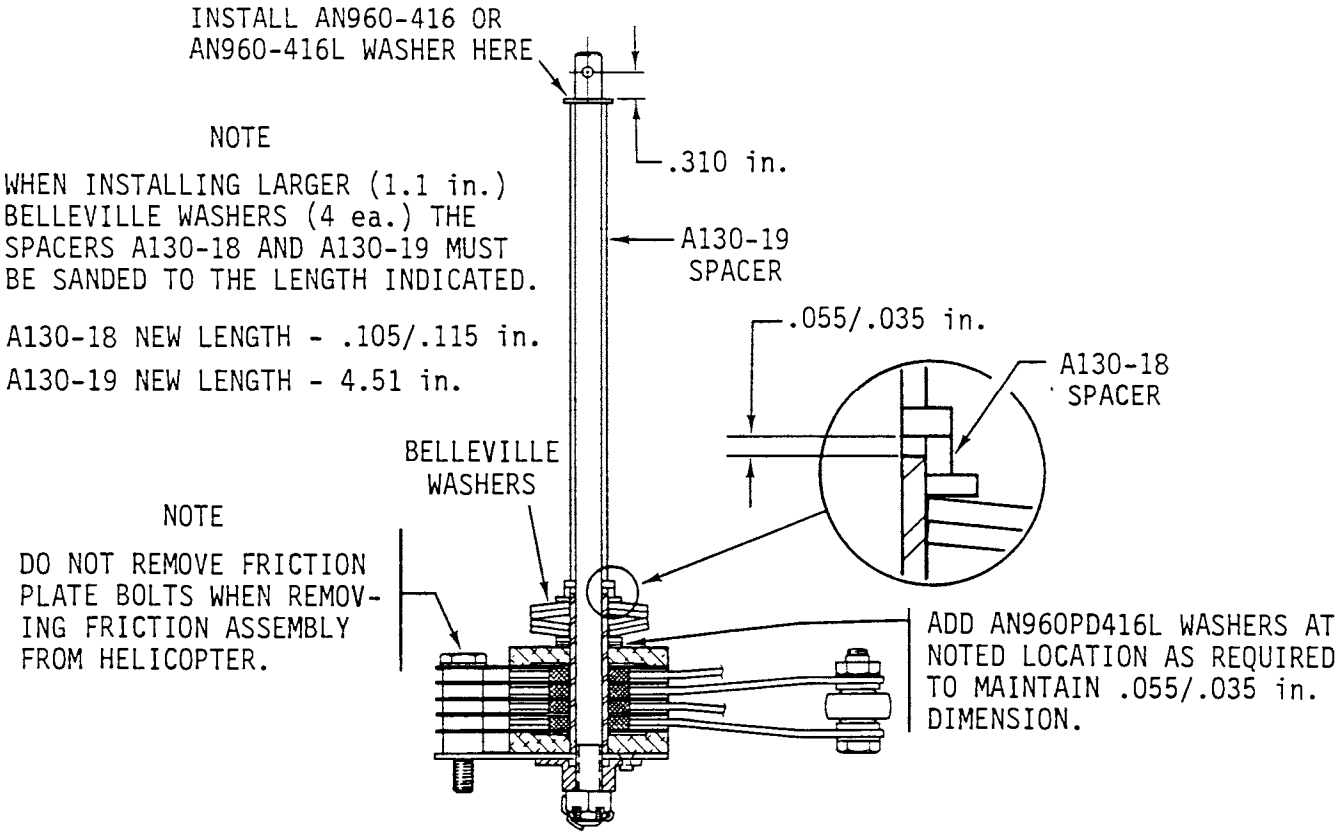

NOTE

WHEN INSTALLING LARGER (1.1 in.) BELLEVILLE WASHERS (4 ea.) THE SPACERS A130-18 AND A130-19 MUST BE SANDED TO THE LENGTH INDICATED.

A130-18 NEW LENGTH - .105/.115 in.

A130-19 NEW LENGTH - 4.51 in.

NOTE

DO NOT REMOVE FRICTION PLATE BOLTS WHEN REMOVING FRICTION ASSEMBLY FROM HELICOPTER.

8.141 Longitudinal Trim Cord Removal

NOTE

For inspection criteria of trim cord, See Section 2.410, Item 4.

a) Remove the screws holding the cabin bottom fore-aft inspection panel.

NOTE

If transponder antenna is installed on this inspection panel, slowly lower panel and disconnect the antenna lead and ground wire to the antenna, pull XPDR circuit breaker and tag C.B. with"Antenna Rmvd."

b) Push cyclic stick full forward.

c) If short elastic trim cord installed as shown in Figure 8-4A, unhook trim cord at front tab of A121-1 push-pull tube and at clip mounted to support to remove trim cord.

d) To remove long elastic trim cord installed as shown in Figure 8-4B, disconnect bottom hook and relieve tension on cord to remove the top hook connected to front tab of A121-1 push-pull tube.

8.142 Longitudinal Trim Cord Installation

a) Ensure clamp and clip are installed per Figure 8.4A

b) For short cord installation see Figure 8-4A

c) For long cord installation see Figure 8-4B

d) Check clearances of trim cord hooks to push-pull tubes, wire bundle and comm. wires out of bottom of cyclic stick.

WARNING

Ensure clearance is maintained between the trim cord hooks and the push-pull tubes and wiring throughout entire cyclic control travel.

e) Connect XPDR antenna lead and ground wire if installed on inspection panel.

f) Install panel and tighten attachment screws.

g) Remove tag and engage circuit breaker.

8.150 Cyclic Friction Assembly

Cyclic Friction is located in the front left corner of the cyclic box cover. Turning the knob clockwise applies friction to both the longitudinal and lateral cyclic. If friction cannot be applied by turning knob clockwise, adjustment of friction may be required.

8.151 Cyclic Friction Adjustment

a) Turn friction knob counter-clockwise until it stops.

b) Remove the roll pin.

c) Lift knob off shaft.

d) Install a thick or thin washer (AN960-416 or 416L) as required to give the proper friction at the center of the cyclic grip measured in a lateral direction. See Figure 8-4C.

System friction with right trim off, fore and aft trim cord removed, and CYCLIC FRICTION OFF:

0-5 lb. - Lateral

0-7 lb. - Fore and Aft

CYCLIC FRICTION ON:

7-13 lb. - Lateral

e) Replace knob and install roll pin.

f) Move flight controls throughout complete travel. Verify no binding or clearance problems.

NOTE

If friction assembly will not tighten install larger (1.1 inch) belleville washers (4 ea.) B1125-078 and change length of spacers per Figure 8-4D.

CAUTION

New friction knob which has roll pin hole drilled thru knurled section of knob must be used with (1.1 inch) belleville washers.

8.160 A121-7 Push Pull (P-P) Tube

8.161 A121-7 Push-Pull Tube Removal

a) Remove belly panel, vertical panel between seat backs and mast fairing, disconnecting pitot line at pitot fitting.

b) Remove vertical firewall maintenance hole plug to remove A121-7 P-P tubes.

NOTE

IF HOLES NOT PRESENT, INSTALL USING RHC KIT KI-21.

c) Remove NAS1304-44 bolt attaching -7 P-P tube rod ends to cyclic fork.

d) Disconnect bolts holding A121-7 P-P tubes at swashplate.

e) Tape sheet metal edges to prevent P-P tube removal damage.

f) Position swashplate and rotor to slide A121-7 P-P tube up and clear. Mark right and left tubes if they are to be reinstalled.

g) Inspect P-P tubes and sleeves for damage.

h) Inspect P-P tube guide for wear. The guide should be replaced if excessively worn or if fretting evident between guide material and riveted aluminum support.

NOTE

If P-P tube replaced, adjust rod ends to obtain same center-to-center length or M.R. Flight Controls will require rigging per R22 Maintenance Manual Section 10.

8.162 A121-7 Push-Pull Tube Inspection/Repair

1. Nicks, cuts or scratches in the tube which are longitudinal not more than 0.010 inches deep, or across the tube and not more than 0.005 inches deep may be polished out.

2. Dented or flattened tube of more than five percent of its diameter must be replaced.

3. Maximum tube wear at guide 0.015 inch per wall after smoothing wear ridges. Epoxy primer repair surfaces before sleeve installation. Any tube wear requires sleeve installation.

4. Replace tube worn in excess of 0.015 inch after polishing.

8.163 Sleeve Installation Onto A121-7 Push-Pull Tube

NOTE

Repair any wear damage on A121-7 P-P tube per Section 8.162 prior to the P-P tube sleeve installation.

a) Clean P-P tube by lightly using MEK or acetone.

b) Apply tape to restrict adhesive to 6.5 inch area located 31 inches from end of P-P tube (not end of rod end).

c) Test paint for paint bubbling; apply 1-inch band of adhesive to one end of 6.5 inch area. If paint bubbles, remove paint and apply epoxy primer to area before applying adhesive to whole 6.5 inch area.

WARNING

Adhesive to be applied to complete area under P-P tube sleeve.

d) Apply adhesive supplied in kit to whole 6.5 inch area. (It will set and become stringy very quickly. Brush thin coat of adhesive without large lumps as rapidly as possible).

NOTE

Sleeve must be installed within two minutes after adhesive applied.

e) Slide sleeve onto tube and center of adhesive.

f) Rotate tube and apply heat using up to 1200-watt heat gun to evenly shrink sleeve producing smooth surface.

CAUTION

DO NOT APPLY HEAT CONTINUOUSLY TO SAME AREA.

g) Allow to cool and apply adhesive to seal end of sleeve. Do not have adhesive at ends above surface of sleeve or sleeve will be damaged or will not enter guide during installation.

8.164 Push-Pull Tube Sleeve Inspection

a) Visually inspect sleeve for wrinkles, pin holes, bubbles, gouges, torn areas, etc. Replace sleeve if any damaged or suspect areas are found.

8.165 A121-7 Push-Pull Tube Installation

a) Inspect P-P tube guide for wear. The guide should be replaced if excessively worn or if fretting evident between guide material and moveable guide plate.

NOTE

Old-style guide bushings which are riveted to fuselage must be replaced with moveable guide kit (RHC Kit KI-19A) if A121-7 Push-Pull tubes are worn. Reference RHC Service Bulletin #36.

b) Loosely (snug) install moveable guide on underside of airframe support A439-1 per Figure 8-4E.

CAUTION

Extreme care must be taken when installing A121-7 P-P tube into guide to prevent damage to P-P tube sleeve.

c) Install A121-7 P-P tube, ensure spacers installed properly. Reference Figure 8.4E.Torque attach bolt 100 in.-lb. plus nut drag.

d) Attach A121-7 P-P tubes to swashplate. Torque attach bolts 100 in.-lb. plus nut drag.

e) Raise collective approximately seven (7) inches (measured from pilot throttle handle to center panel) with cyclic neutral.

f) Tighten guides three attach bolts to slight friction and verify A121-7 P-P tubes are centered in guide bore. Torque guide attach bolts 40 in.-lb. and torque stripe nuts.

g) Remove protective tape from sheet metal edges used to protect P-P tubes during installation.

h) Check full travel clearances of flight controls.

1) Upper frame forward two boltheads at horizontal firewall to A121-7 P-P tubes minimum clearance .010 inch.

2) Fuel tank top inboard flange to left A121-7 P-P tube minimum clearance .10 inch.

8.165 A121-7 Push-Pull Tube Installation (cont'd)

i) Verify fasteners disconnected are retorqued per R22 Maintenance Manual Section 1.300.

j) Reinstall panels, fairings and firewall plugs.

k) If rod ends were unscrewed from P-P tubes, main rotor rigging must be re-checked per Section 10.

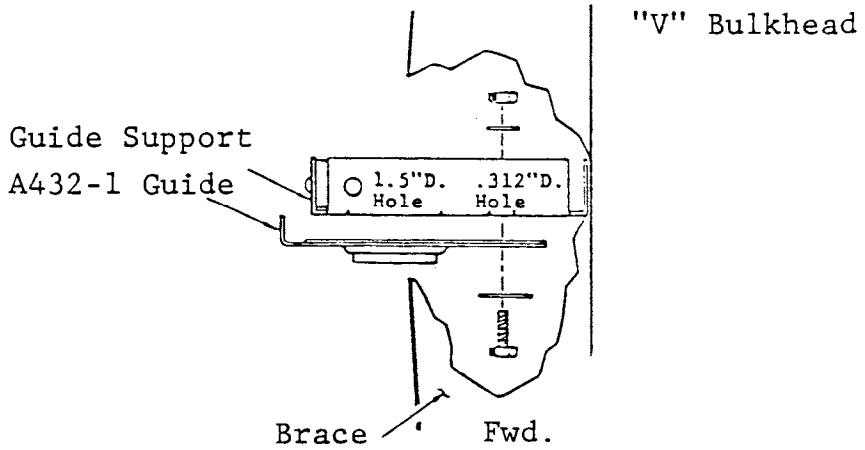

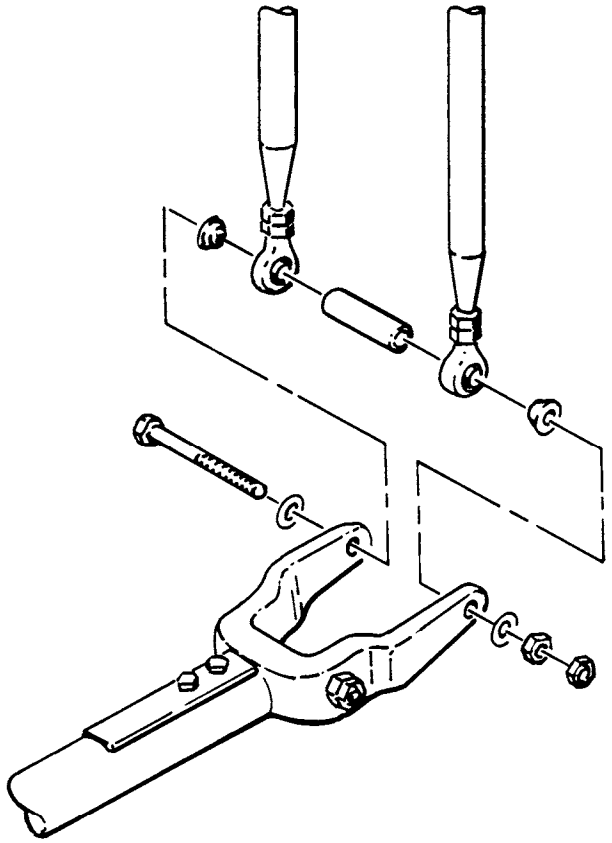

FIGURE 8-4E PUSH-PULL TUBES AND GUIDE

8.200 COLLECTIVE CONTROL

8.210 Collective Stick Assembly (Standard or Removable)

8.211 Collective Stick Removal

a) Remove vertical center panel, right and left seat backs and collective boot.

b) Remove collective spring guard in aft left baggage compartment.

c) Place collective in full down position. Use either the MT294-1 collective spring tool or 0.032"safety wire to remove the spring assembly. If safety wire is used, twist wire around rod end to rod end several times to assure that the spring assembly can be removed safely.

> **WARNING**
>
> Spring is under compression and failure to comply with above procedure can cause bodily harm and/ or damage to rotorcraft.

d) Remove bottom spring attach bolt slowly while moving collective slightly to put spring tension onto restraining safety wire. When bolt is removed, swing the spring assembly forward for more clearance during removal.

e) Disconnect collective stop at the A348-1 seat belt anchor.

8.211 Collective Stick Removal (cont'd)

> NOTE
>
> To prevent damage, rotate collective stop slider in line with collective handle and tape in place.

f. Disconnect A205 yoke from collective stick.

g. Disconnect A327-1 overtravel spring from collective throttle arm.

h. If installed, disconnect aft end of carb heat assist push-pull tube from collective stick.

i. Disconnect two NAS1304 attach bolts at either end of collective stick.

j. Remove collective stick assembly.

8.212 Collective Stick Installation

a. Assemble A332-1 friction lever per Figure 8-5. The spring washers, item 14, should be assembled with their concave sides together. The two washers, item 13, are installed with the grey Teflon®-coated surface against the A333-1 stop (item 12). The A332-1 lever is threaded onto the NAS1352-4-24P screw as the screw starts to protrude from the attachment fitting.

> NOTE
>
> See collective friction adjustment for finalizing friction assembly after completion of collective installation. Refer to Section 8.224.

b. (Reference if not installed). Install A205-1 fork to the forward rod end of the A175-1 bellcrank on the cyclic fork.

> NOTE
>
> Dimension of A205-1 fork should be 3.45 inches from center of rod end hole to center of attaching bolt hole. No palnut required on this rod end.

> NOTE
>
> If new A139-1 bearings installed, ream to 0.375 / 0.376 inch inner diameter with dead sharp reamer (see Section 8.600).

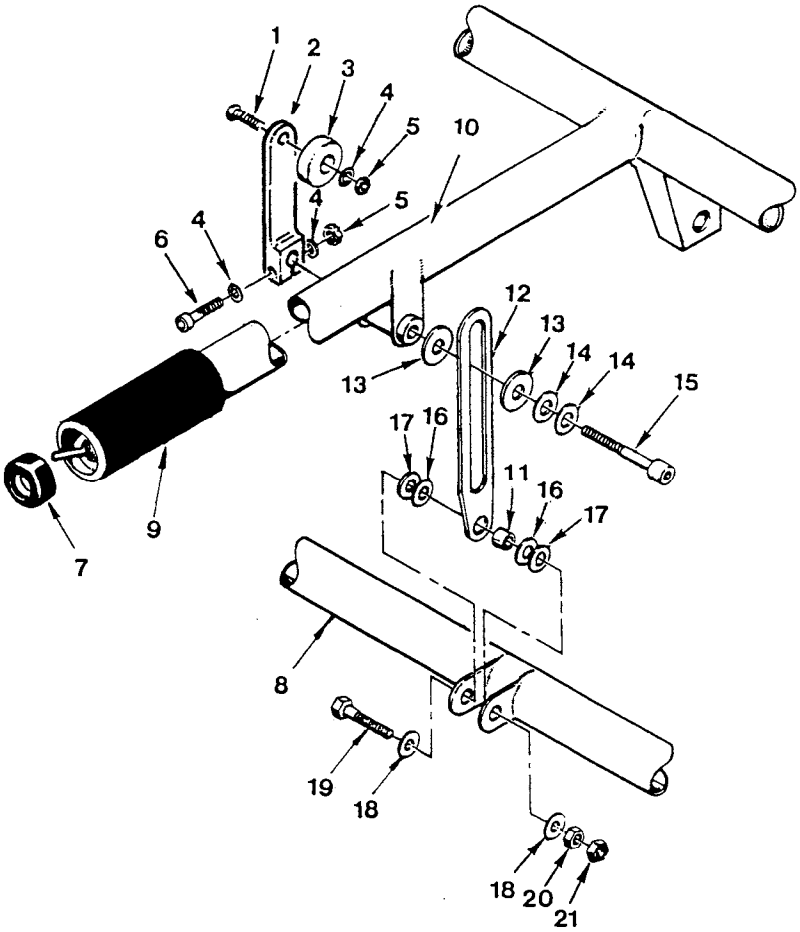

FIGURE 8-5 COLLECTIVE FRICTION ASSEMBLY

NUMBER	PART NUMBER	DESCRIPTION	NUMBER	PART NUMBER	DESCRIPTION
1	AN525-832R6	Screw	13	A141-20	Washer
2	A332-1	Lever	14	B0500-022-S	Belleville Washer
3	A431-1	Knob	15	NAS1352-4-24P	Screw
4	AN960-8L	Washer	16	AN960-416	Washer (A/R)
5	NAS1291-08	Nut	17	AN960-416L	Washer (A/R)
6	NAS1352-08-12	Screw	18	AN960-10L	Washer
7	A959-1	End Cap	19	NAS1303-5	Bolt
8	A348-1	Anchor	20	NAS679A3	Nut
9	A601-1	Grab-On Grip	21	MS27151-7	Palnut
10	A757 or A758	Collective Assy			
11	A130-4	Spacer			
12	A333-1	Stop			

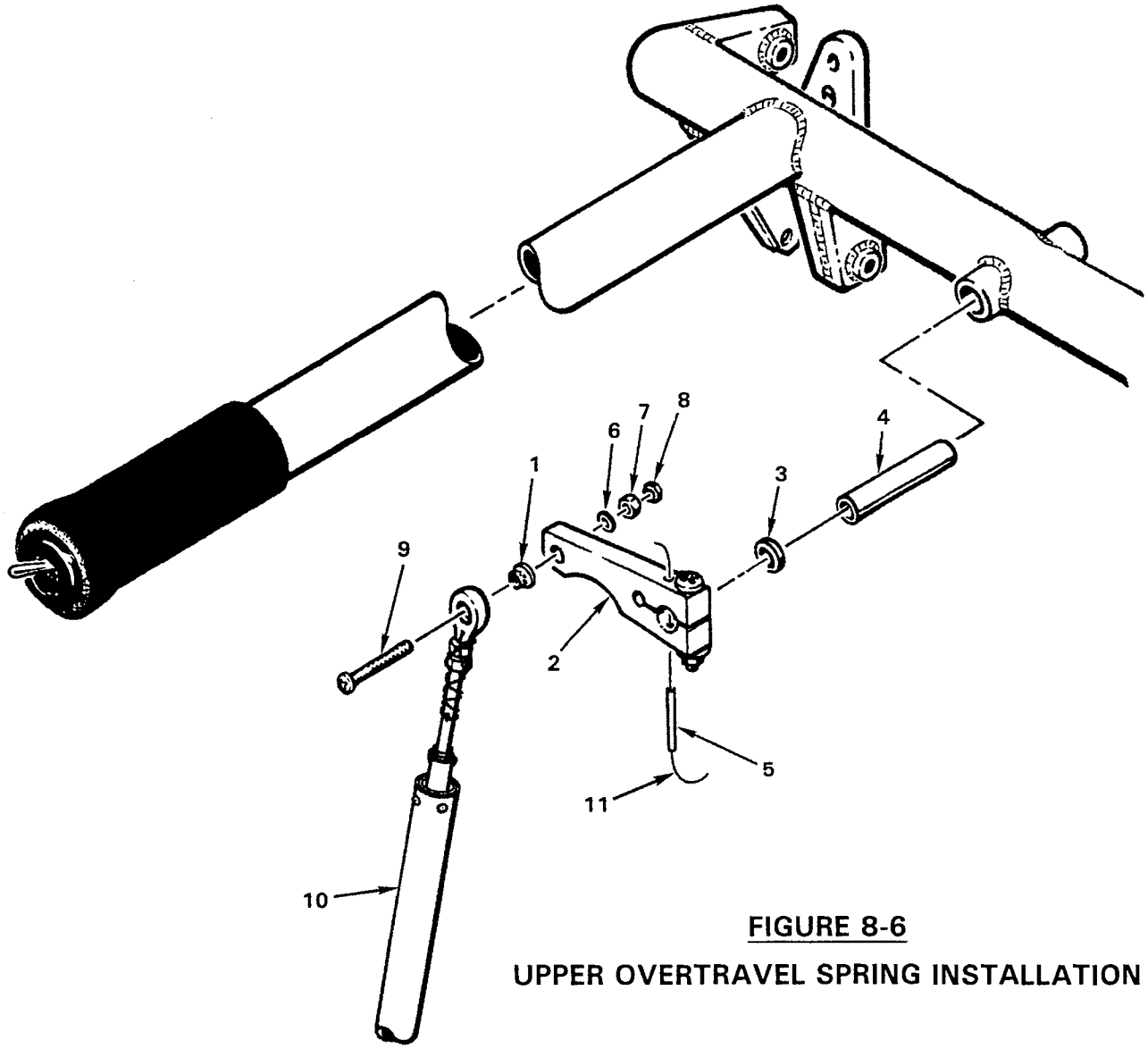

FIGURE 8-6

UPPER OVERTRAVEL SPRING INSTALLATION

NUMBER	PART NUMBER	DESCRIPTION
1	A341-1	Spacer
2	C342-1	Arm Assembly
3	A141-16	Washer
4	A335-1	Torque Tube
5	52-018-078-0750	Roll Pin
6	AN 960-10L	Washer
7	NAS 679A3	Nut
8	MS27151-7	Palnut
9	A486-1	Screw
10	A327-1	Overtravel Spring Assembly
11	MS20995C32	0.032 in. dia Safety Wire

8.212 Collective Stick Installation (cont'd)

c) Install collective stick into rotorcraft.

d) Connect collective inboard and outboard attach bolts.

NOTE

Special A115-1 spacer required against the A329-1 bearing block assembly. Smaller end against inner ball; larger end against bolt-head.

Torque to 100 in-lbs. plus nut drag. Install palnuts. Attach A205-1 fork to the collective stick. Torque to 100 in-lb. plus nut drag. Install palnut. Verify smooth operation of fork pivot.

e) Install lower end of A333-1 stop to the A348-1 seat belt anchor. When installing A333-1 stop onto the A130-4 spacer, add AN960-416 and 416L washers on either side of stop as required to prevent binding and to obtain zero to .031 inch axial play. Torque nut to 27 in.-lb. plus nut drag. Install palnut. Check for binding and axial play.

f) Connect collective spring and install cover per Section 8.

WARNING

Failure to remove restraining safety wire after collective spring is installed can limit control travel creating a safety-of-flight hazard.

g) Install the A327-1 overtravel spring to the end hole of the A342-1 collective arm. (See Fig. 8-6).

NOTE

Use special A486-1 screw and A341-1 spacer. With screw head against rod end, install spacer with large diameter against collective arm. Torque to 28 in.-lb. plus nut drag. Install palnut.

8.212 Collective Stick Installation (cont'd)

WARNING

Improper installation can cause binding, rod end damage or rod end separation with subsequent loss of engine throttle control

h. If installed, connect aft end of carb heat assist push-pull tube to flat side of collective arm.

i. Adjust throttle correlation rigging per Section 10.150.

j. Install panels and seat backs.

8.220 Collective Spring Assembly (See Figure 8-8)

The collective spring assembly is installed to balance in-flight main rotor collective control forces. A038-1 thru -7 spring assemblies may be adjusted or springs changed to rebalance collective control using the following springs and procedure:

Assembly P/N	Spring P/N	Spring Color	Spring Constant
A038-1	A429-1 (old)	Silver	89 lb/in.
A038-2	A429-2 (old)	Primer	35 lb/in.
A038-3 or -5	A429-3	Grey	50 lb/in. (weak)
A038-4	A429-4 (old)	Black	70 lb/in.
A038-6	A429-5	Gold	50 lb/in. (standard)
A038-7	A429-8	White	71 lb/in. (strongest)

Adjust A038-1, -2, -3, and -4 spring assemblies per Section 8.223. Adjust A038-5, -6 and -7 spring assemblies per Section 8.224.

NOTE

A038-5 spring assembly replaces A038-2 assembly. A038-6 assembly replaces A038-1, -3, & -4 assemblies.

WARNING

Exercise extreme care when working with compressed collective springs. Always relieve spring compression slowly.

8.221 Collective Spring Removal

a. Remove left seat back. Remove fuel valve handle.

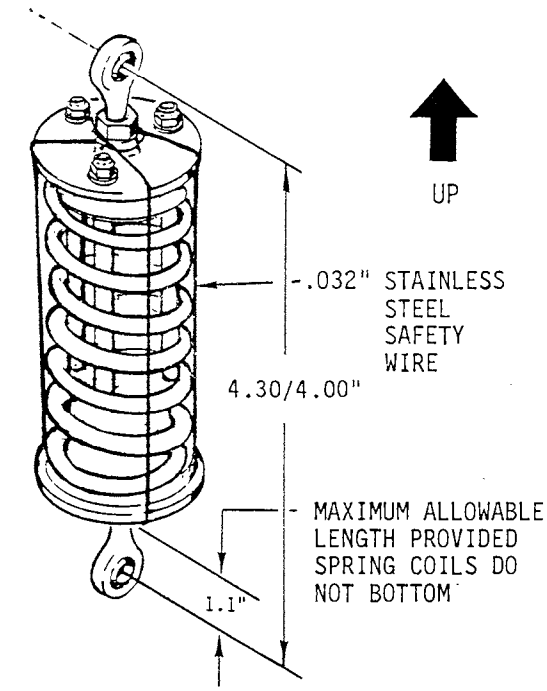

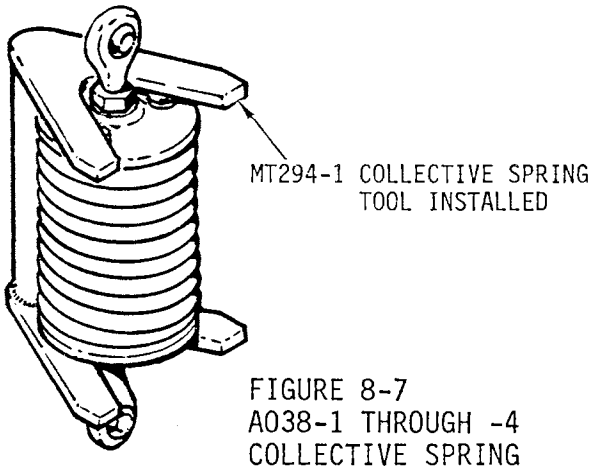

FIGURE 8-7
A038-1 THROUGH -4
COLLECTIVE SPRING
ASSEMBLY

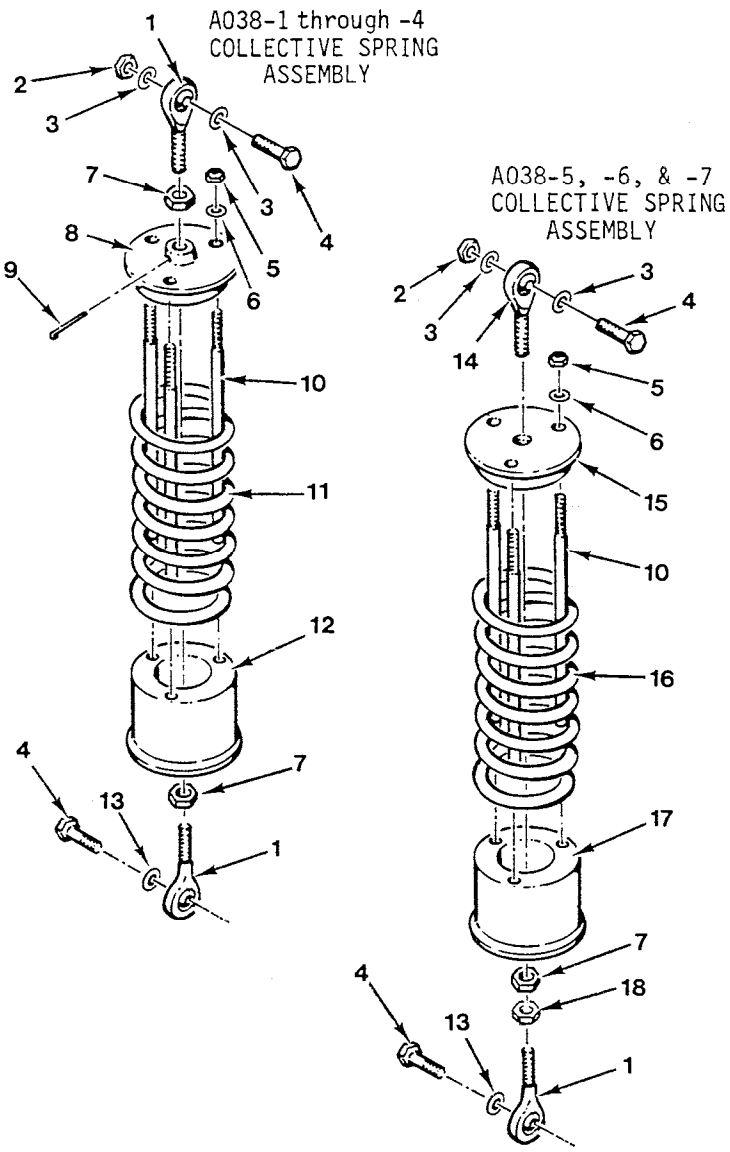

FIGURE 8-8 COLLECTIVE SPRING
ASSEMBLY

NUMBER	PART NUMBER	DESCRIPTION	NUMBER	PART NUMBER	DESCRIPTION
1	A0127-3	Rod End	10	A428-1	Rod
2	NAS679A3	Nut	11	A429-1 thru -4	Spring
3	AN960-10L	Washer	12	A426-4	Plate
4	NAS6603-6	Bolt	13	AN960-10	Washer
5	NAS679A06	Nut	14	B292-3	Rod End
6	AN960-6	Washer	15	A426-5	Cap
7	AN315-3R	Nut	16	A429-3, -5, or -8	Spring
8	A426-3	Plate	17	A426-6	Cap
9	MS24665-69	Cotter Pin	18	MS27151-7	Palnut

8.221 Collective Spring Removal (cont'd)

attach screws and fuel valve plate.

b) Remove the collective spring cover. Loosen - DO NOT REMOVE screw located on aft vertical firewall stiffener. Remove screw at top of cover from nut or nut clip. Slide cover from under loosened screw and remove.

c) Place the collective in the full down position. Use either the MT294-1 collective spring tool or .032 in. safety wire to remove the spring assembly. If safety wire is used, twist wire around rod end to rod end several times to assure that the spring assembly can be removed safely.

> WARNING
>
> Spring is under compression and failure to comply with procedures can cause bodily harm and/or damage to rotorcraft.

d) Remove bottom spring attach bolt slowly while moving collective slightly to put spring tension onto restraining wire.

e) Disconnect upper spring assembly attach bolt and remove the spring assembly.

8.222 Collective Spring Installation

NOTE

Overall compressed length for installation to be 4.30/4.00 in. between centers of the rod ends. The nut end of the rod guides to be pointing up (See Figure 8-7).

> WARNING
>
> When installing the A038-5 or -6 spring assembly, both rod ends must be bottomed (B292-3 rod end has left-hand thread). Failure to bottom both rod ends can cause either one to run out of threads during adjustment and can cause bodily harm.

a) Insert collective spring assembly into the collective stick attachment arm. Install bolt and torque to 40 in.-lbs. plus nut drag.

b) Move collective to align rod end into lower mount. Install bolt and torque to 40 in.-lbs. plus nutplate locking drag.

8.222 Collective Spring Installation

c) On installation of the spring assembly, be sure to cut and remove the restraining safety wire.

d) Check to make sure that the spring coils are not binding with collective stick full down. Adjust spring assembly as required per Section 8.223 or 8.224. Install collective cover.

WARNING

Failure to remove the safety wire or allowing the spring coils to bind can limit the control travel creating a safety-of-flight hazard.

e) Install co-pilot seatback. Tighten seatback screws. Tighten four (4) fuel valve plate attach screws.

WARNING

Ensure proper fuel valve handle orientation.

f) Install fuel valve handle. Verify proper orientation using gascolator drain. (See Fuel Flow Check Section 12.260).

8.223 Collective Spring Adjustment for A038-1 thru -4 Assembly

a) Small force adjustments may be made by screwing the lower rod end in or out. Install the MT294-1 collective spring tool. Remove the lower bolt and loosen the adjustment. After reinstallation, ensure that the spring coils do not bottom out with the collective full down. The maximum extension for the bottom rod end is 1.1 inches provided the spring coils do not bottom (See Figure 8-7).

b) Remove the collective spring per Section 8.221.

c) Place spring assembly in a soft-jawed vise.

d) Compress the spring slightly and cut the safety wire.

e) Carefully open the vise to relieve the spring tension and remove the spring.

f) Install a spring selected from the table in Section 8.220 to obtain the desired trim force.

g) Compress the spring assembly in a vise to a dimension of 4.30/4.00 inch between the rod end center lines. Safety wire with 0.032 inch diameter stainless steel safety wire (see Figure 8-7).

8.223 Collective Spring Adjustment for A038-1 or -4 Assembly (cont'd)

h. Reinstall the collective spring assembly per Section 8.222.

8.224 Collective Spring Adjustment for A038-5, -6, or -7 Assembly

Large spring force adjustments are made by changing spring. Small spring force adjustments may be made as follows:

a. Remove collective spring cover.

b. Loosen palnut and jamnut on lower rod end.

c. With collective up, rotate spring by hand to increase or decrease spring force (lower rod end is right-hand thread; upper rod end is left-hand thread). Screwing rod end in decreases collective-up force. Extending rod ends increases collective-up force.

WARNING

Ensure that spring coils are not binding with collective stick full down after making adjustment. Binding spring coils can limit flight control travel.

d. Tighten jamnut per Section 1.330 and tighten palnut per Section 1.320.

e. Install collective spring cover.

8.225 Collective Friction Adjustment (see Figure 8-5)

To adjust collective friction:

a. Loosen nut (item 5) on friction lever and position lever in locked position.

b. Turn screw (item 15) in threaded collective attachment fitting clockwise to increase friction, counter-clockwise to decrease friction.

c. Adjust locked friction to 12 to 20 pounds measured at collective grip, using a spring scale pulling up from bottom of travel.

WARNING

Collective friction greater than 20 pounds may prevent aircraft from entering autorotation.

d. Tighten nut (item 5) on friction lever.

8.230 RPM Governor System

The governor system senses engine RPM and applies corrective input forces to the throttle; when RPM is low, governor increases throttle and vice versa. Throttle inputs are through a friction clutch which can be easily overridden by the pilot. The governor is active from 80% - 115% engine RPM and can be switched on or off by the pilot using the toggle switch on the end of the right seat collective control.

The governor system is designed to assist the pilot in controlling the RPM in the normal operating range. It may not prevent over- or under-speed conditions generated by aggressive flight maneuvers. Within the active range there is a 3%-wide deadband from 102.5% - 105.5% where the governor will not take action provided the rpm is steady.

The governor system consists of the following major components:

1. The B286-2 governor controller, a solid-state analog-circuit control unit mounted behind the left seat back. The controller senses engine RPM via tachometer points in the engine right magneto (helicopter left side) and provides a corrective signal to the governor assembly.

2. The B247-5 governor assembly, attached to the collective stick assembly behind the left seat back. When activated by the governor controller, the governor gearmotor and attached worm gear drives a friction clutch connected to the throttle.

8.231 Governor Controller Removal

1. Remove left seat back assembly to gain access to controller.

WARNING

No external adjustment of controller is available. If controller fails to operate correctly, remove and return it to RHC.

2. Disconnect electrical connector.

3. Remove four screws securing governor controller to left seat back assembly.

8.232 Governor Controller Installation

1. Secure governor controller to left seat back assembly.

2. Connect electrical connector.

3. Install seatback panel. If fuel valve handle has a hexagonal mating recess, perform fuel flow check per Section 12.260.

8.233 Governor Assembly Removal

The governor assembly is behind the left seat back assembly, attached to the collective stick.

1. Remove collective stick per Section 8.211.

ROUTE -576 AND -577 WIRES WITH EXISTING MAIN WIRING HARNESS USING MS3367-4-9 OR MS3367-5-9 TY-RAPS.

GOVERNOR ON-OFF SWITCH

B263-33 HOUSING

LEFT KEEL PANEL

WIRING HOLE

-577 WIRE

B297-2 CIRCUIT BREAKER

-576 WIRE WITH B260-2 TERMINAL

MS21919WDG5 CLAMP

B804-2 HARNESS ASSEMBLY

WIRES TO MICRO SWITCH AND POSITION LIGHT

MS3116F12-10SX PLUG TO B286-2 CONTROLLER

A654-70 DECAL

COLLECTIVE STICK-ACTIVATED MICRO SWITCH

FWD

LEFT POSITION LIGHT

FIGURE 8-8A
(VIEW LOOKING DOWN)

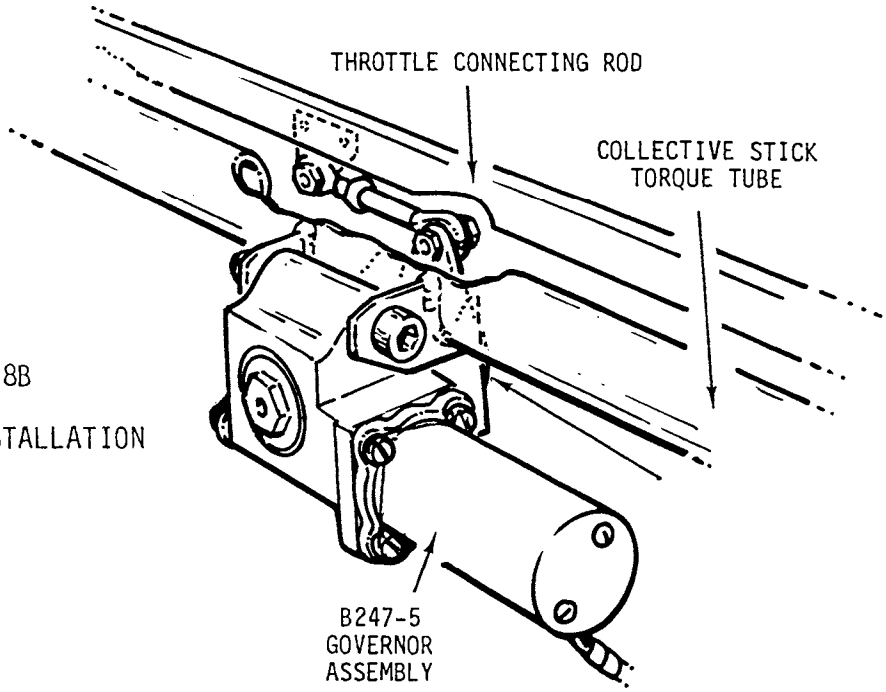

FIGURE 8-8B

RPM GOVERNOR INSTALLATION

8.233 Governor Assembly Removal (cont'd)

2. Remove three screws securing governor assembly to collective stick.

3. Remove bolt securing governor assembly's output arm to link assembly.

WARNING

No adjustment of friction clutch is permitted. No field replacement of gearmotor is permitted. If friction setting is incorrect, or if gearmotor operates incorrectly, remove governor assembly and return to RHC.

8.234 Governor Assembly Installation

1. Connect governor assembly's output arm to link assembly. Ensure:

   a. NAS6603-7 bolt head toward collective grips and no washer under bolt head.

   b. AN960-10 or NAS620-10 washer between governor output arm and rod end.

   c. AN960-10L washer between rod end and nut. Torque nut and palnut per Section 1.320.

NOTE

Link assembly length must be 2.47-2.53 inches rod end center-to-center.

2. Ensure governor assembly's output arm points upward towards collective's throttle connecting rod. Attach governor assembly to collective stick. Torque NAS1351-4-28P screw per Section 1.320. Torque both AN503-8-4 screws to 27 in.-lb and safety wire with 0.020 inch diameter safety wire.

3. Rotate throttle grips. Verify smooth operation and no interference.

4. Install collective stick per Section 8.212.

8.239 Governor Troubleshooting

The majority of governor problems are caused by the engine's right (helicopter left side) magneto tachometer contact assembly (points) being out of adjustment or faulty. Refer to TCM Master Service Manual for tachometer contact assembly installation and adjustment.

When operating in the 80%-115% active range, the R22 governor will attempt to maintain engine rpm at 104% ± 1.5% (102.5%-105.5%). The edges of this governed 3%-rpm wide window, called a "deadband", may be detected as follows:

1. Start engine and run-up helicopter per Pilot's Operating Handbook. Collective must remain fully down during this and following steps.

8.239 Governor Troubleshooting (cont'd)

2. Gently hold throttle and very slowly increase rpm (do not exceed 107%). Note and record engine rpm indication when governor input (subtle throttle resistance) is encountered.

3. Gently hold throttle and very slowly decrease rpm (do not go below 97%). Note and record engine rpm indication when governor input (subtle throttle resistance) is encountered.

4. Subtract Step 3 indication from Step 2 indication. Result should be approximately 3%.

A result of 3% but centered beyond 104±0.5% is indicative of a governor controller problem.

Results greater than 3% but still centered on 104% are usually indicative of excessive throttle linkage friction or insufficient governor friction.

Check throttle friction by disconnecting overtravel spring assembly upper rod end from C342 arm and attaching a spring scale to the rod end. With carburetor throttle arm in idle position, slowly pull up overtravel spring assembly with spring scale and note maximum 4 pounds moving friction prior to full-open throttle at carburetor. Excessive throttle linkage friction can be caused by binding rod ends, control interference, carburetor throttle shaft bushing elongation, or binding carburetor accelerator pump (typically binds in one direction only).

Check governor friction with collective down, collective friction on, overtravel spring assembly upper rod end disconnected from C342 arm, and C342 arm positioned horizontally. Attach a spring scale to hole in C342 arm and, with scale held tangential to arm, slowly pull on scale and note both the breakaway and the moving frictions. Breakaway friction is typically 0-0.5 pound greater than moving friction. Breakaway friction 1 pound or greater than moving friction may indicate damaged or contaminated governor friction clutch. Moving friction must be minimum 8 pounds until arm stops moving. Insufficient moving friction can be caused by wear, contamination, or loss of spring rate.

Proper governor operation requires a minimum 2:1 ratio of governor friction-to-throttle linkage friction.

Erratic operation is usually indicative of tachometer contact assembly problems or wiring damage. Wiring damage may be evidenced by crushing, pinching, or abrasion, all of which can result in grounding of one or both center wire conductor(s) to the shielding or to structure. Tachometer contact assembly problems may be caused by contamination, oxidation, or loose contact(s), in addition to installation or assembly errors.

Contamination can be caused by over-lubrication of cam follower felt, engine oil leaking past oil seal, or moisture intrusion thru vent plug. Oxidation can be caused by an obstructed vent plug or by engine oil leaking past the oil seal.

When flying in turbulence, or if the engine is lightly "loaded" (drive train almost freewheeling), a fluctuating MAP indication is expected.

Any loose connection in throttle linkage (including worn carburetor throttle shaft bushings) will result in both RPM & MAP oscillations.

8.300 JACKSHAFT AND SUPPORT STRUTS

8.310 Jackshaft (See Figure 8-9)

8.311 Jackshaft Removal

NOTE

Rigging check should not be necessary if jackshaft support strut rod ends or push-pull tube rod ends are not loosened or removed.

a) Disconnect the push-pull tubes from the jackshaft.

b) Disconnect the two (2) jackshaft support bolts at the upper support strut rod ends.

c) Remove jackshaft.

8.312 Jackshaft Installation

Install jackshaft to strut rod ends. Aft support rod end requires a safety washer A214-3 between the rod end and bolthead. Both upper strut attach boltheads point aft. Torque nut to 100 in.-lbs plus nut drag. Install palnut.

Connect the A121-3 and -5 push-pull tubes to jackshaft. Both push-pull tube attach boltheads point forward. The forward A121-3 push-pull tube rod end requires a safety washer A214-3 and A115 spacer between the rod end and bolthead. Torque nuts to 100 in.-lbs plus nut drag. Install palnut.

Verify no binding or interference with control movement throughout flight control travel.

8.320 Strut Assembly (Jackshaft Support)

8.321 Jackshaft Strut Removal

a) Remove jackshaft per Section 8.311

b) Remove the aft support strut. Disconnect horizontal strut assembly at the 'V' bulkhead. Disconnect the lower strut rod end at the aft main rotor gearbox fitting.

NUMBER	PART NUMBER	DESCRIPTION
1	NAS1304-23	Bolt
2	A214-3	Washer
3	A343-1	Strut
4	AN960-416L	Washer
5	NAS679A4	Nut
6	MS27151-13	Palnut
7	A121-5	Push-Pull Tube
8	NAS1304-7	Bolt
9	NAS1304-21	Bolt
10	A121-3	Push-Pull Tube
11	A115-1	Spacer
12	A337-1	Jackshaft
13	A347-1	Brace
14	NAS1304-2	Bolt
15	AN960-416	Washer
16	AN525-832R6	Screw
17	AN960-8L	Washer
18	A437-2	Tab
19	NAS679A08	Nut

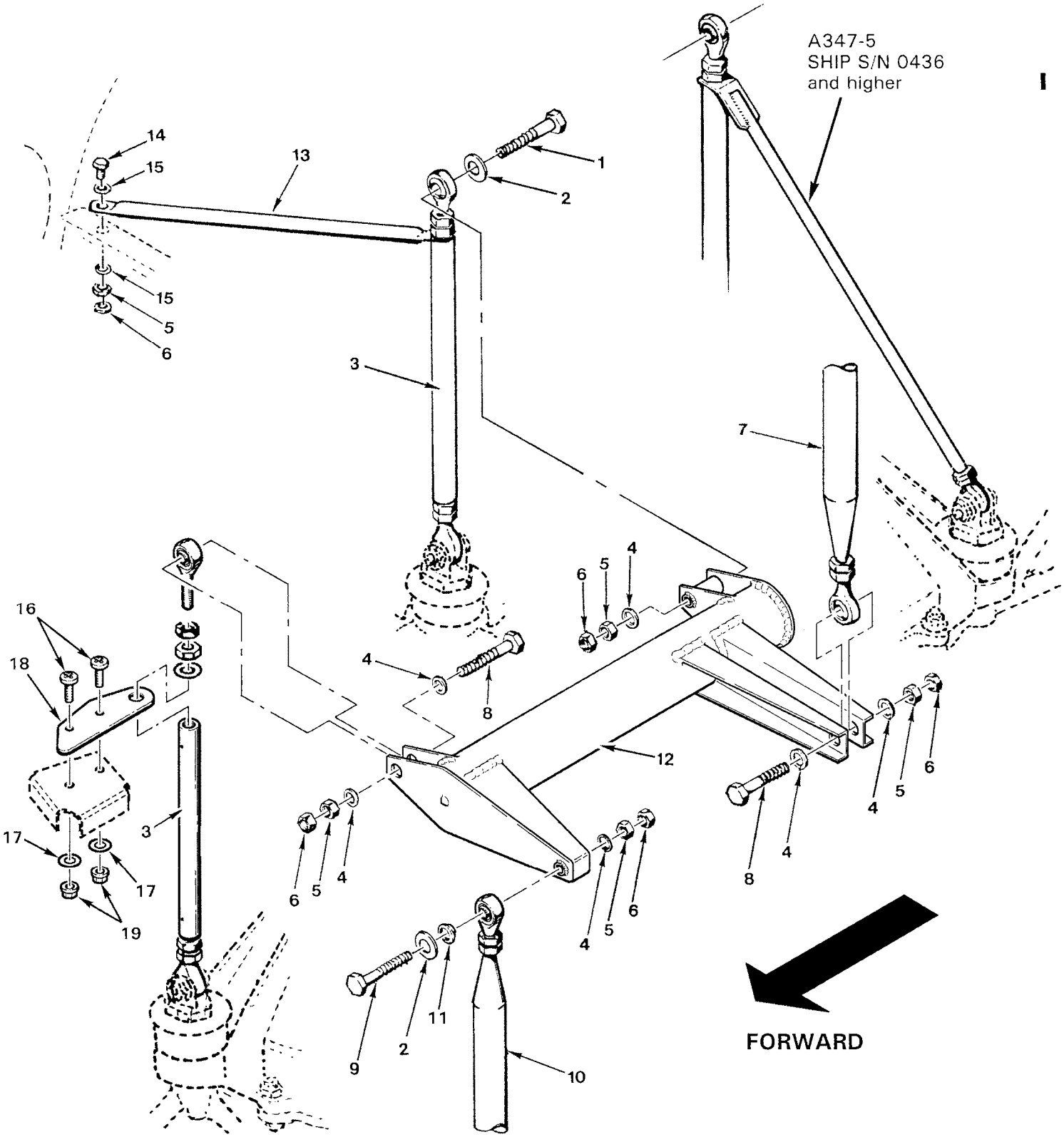

FIGURE 8-9 JACK SHAFT INSTALLATION

8.321 Jackshaft Strut Removal (cont'd)

> NOTE
>
> For ease of installation later, DO NOT disassemble the long horizontal strut from the vertical strut.

c. Forward support strut removal: To remove, it will be necessary to disconnect upper rod end installed through a fuselage tab, DO NOT remove lower rod end from support if possible.

> NOTE
>
> For ease of installation later, measure length of strut from center of rod ends and tag strut with length for later reference.

8.322 Jackshaft Strut Installation

> NOTE
>
> Two (2) AN960-516L washers are installed on forward supports; one between upper forward rod end jamnut and fuselage tab, other between upper aft jamnut and A347 horizontal strut.

1. Install forward support strut.

   a. Connect forward vertical support strut lower rod end to forward-right gearbox fitting. Verify minimum preload between bulkhead-mounted jackshaft brace tab and top of strut; adjust strut height as required. Verify proper rod end engagement via strut witness hole.

   b. Install strut upper rod end , with palnut and jam nut installed, thru brace tab into top of strut. Adjust rod end center-to-center dimension to previously recorded measurement, if applicable. Verify proper rod end engagement via strut witness hole.

2. Connect aft-vertical strut lower rod end to aft-right main rotor gearbox fitting. Connect vertical diagonal strut to aft-left gearbox fitting, or connect horizontal diagonal strut to Vee-bulkhead, as applicable.

3. Torque bolts per Section 1.320. Install palnuts, and torque per Section 1.320. Torque stripe per Figure 2-1.

4. Install jackshaft and push-pull tubes per Section 8.312.

5. If aft-vertical strut was disassembled or length changed, adjust aft strut and/ or forward strut to achieve jackshaft level to helicopter keel panel within ± 0.5°. Verify proper rod end engagement through witness hole in strut.

6. Verify proper rod end centering and all bolts, jamnuts, and palnuts are torqued per Section 1.320 and torque striped per Figure 2-1.

8.400 SWASHPLATE AND MAIN ROTOR PITCH LINKS

8.410 Swashplate

8.411 Swashplate Removal

> NOTE
>
> Rigging check is not required if push-pull tube rod end bearing center-to-center dimension has not changed.

1. Remove main rotor hub and blade assembly per Sections 9.111 and 9.121.
2. Disconnect and remove A203 yoke halves.
3. Remove droop stops and elastic teeter stops.
4. Remove swashplate boot.
5. Disconnect three push-pull tubes and rod end of lower A205 fork assembly from lower, non-rotating swashplate.
6. Lift swashplate off slider tube.

8.412 Swashplate Installation (see Figure 8-10)

CAUTION

Swashplate plastic balls are obsolete and must be replaced.

1. Verify swashplate rotates freely.

2. On swashplate ear opposite interrupter, attach pitch link's lower rod end with five AN970-4 washers and two AN960-416L washers under bolt head, one A115-1 spacer on each side of rod end, with the small washers between spacer and large washers. Install additional AN960-416L washer on bolt inboard of inner A115-1 spacer and insert bolt into swashplate ear. Washer stack-up must be located on outside of ear. Install washers under nut as required to expose two to four threads after torquing. Torque nut per Section 1.320. Install palnut, torque per Section 1.320, and torque stripe per Figure 2-1.

3. On interrupter-side swashplate ear, attach pitch link with an A214-3 washer under bolthead, one A115-1 spacer on each side of pitch link rod end, and one AN960-416L washer between A115-1 spacer and swashplate ear.

4. On interrupter-side swashplate ear, install A115-1 spacer on protruding length of bolt, then A205 fork assembly rod end (rod end shank pointing up), another A115-1 spacer, one A214-3 washer, and the nut. Torque per Section 1.320. Install palnut, torque per Section 1.320, and torque stripe per Figure 2-1.

5. Attach A204 arm to A205 fork installed in previous step. If fork has plastic A139-1 bearings, line ream and spot face bearings for correct fit per Section 8.600. If fork has C648-2 bearings (dark-brown colored face & bore), install a combination of A117-45, -46, and/or -47 shims between A105-17 journal and A141-43 washer on nut side to provide 0.010/0.001 inch axial play in joint. Refer to Figure 2-8. Verify 2.5 in.-lb maximum pivot friction.

6. Install swashplate and attached pitch links, fork, and arm onto slider tube assembly atop main rotor gearbox.

7. Slide boot over A251 main rotor shaft and set in place.

8. Install A203 yoke assembly onto A251 shaft using A210-1 key to position yoke on shaft. Radiused edge of A210-1 key goes into flange slot in A251 shaft. Torque bolt per Section 1.320. Install palnut, torque per Section 1.320, and torque stripe per Figure 2-1.

CAUTION

Tighten and torque bolt through A210-1 key first.

8.412 Swashplate Installation (cont'd)

9. Install opposite clamping bolt in chord-arm side of yoke. As applicable, torque NAS1305 or NAS6605 bolt per Section 1.330 (special torque), or torque NAS1304 or NAS6604 bolt per Section 1.320. Install palnut, torque per Section 1.320, and torque stripe per Figure 2-1.

NOTE
A small space between chord-arm side yoke halves adjacent to driveshaft is normal. Do not exceed bolt torque limits.

10. Connect A204-1 arm to A203 yoke assembly. If yoke has plastic A139-1 bearings. If yoke has plastic A139-1 bearings, line ream and spot face bearings for correct fit per Section 8.600. If yoke has C648-2 bearings (dark-brown colored face & bore), install a combination of A117-45, -46, and/or -47 shims between A105-17 journal and A141-43 washer on nut side to provide 0.010/0.001 inch axial play in joint. Refer to Figure 2-8. Verify 2.5 in.-lb maximum pivot friction.

11. Install A255 counterweights and AN970-4 washers on A203 yoke arm as required for balance.

12. Attach lower A205 fork's rod end to left side of middle of three lugs grouped together on lower swashplate. Connect forward push-pull tube rod ends to left side of remaining two forward lugs. Aft push-pull tube rod end attaches to right side of lower swashplate aft lug. A214-3 safety washer required between bolthead and A115-1 spacer. A115-1 spacers are required on each side of all rod end balls. Torque bolts per section 1.320. Install palnuts, torque per Section 1.320, and torque stripe per Figure 2-1.

13. Position boot on upper swashplate and Ty-rap® in place. Ensure upper portion of boot clamps on shaft between upper flange and A203 yoke halves.

14. Temporarily install teeter hinge bolt and journals. Install droop stops and elastic teeter stops. Ensure teeter stop brackets are oriented per Figure 9-5 Torque bolt per Section 1.320. Install palnut, torque per Section 1.320, and torque stripe per Figure 2-1. Remove teeter hinge bolt and journals.

15. Verify no binding or interference with control movement throughout flight control travel.

16. Install main rotor hub and blades per Section 9.100.

17. Track and balance main rotor per Section 10.200.

NUMBER	DESCRIPTION
1	Swashplate Assembly (Incl. Items 2 Thru 26)
2	Bolt
3	Washer
4	Counter Weight (1.10 Inch O.D.) Counter Weight (1.90 Inch O.D.)
5	Yoke Half Assembly (w/plastic or Teflon® bearing)
6	Nut
7	Palnut
8	Key
9	Shim
10	Journal
11	Bearing (plastic or Teflon®)
12	Arm
13	Ty-rap®
14	Boot
15	Fork Assembly (w/plastic or Teflon® bearing)
16	Spacer
17	Rod End
18	Link Assembly
19	Jam Nut
20	Barrel
21	Safety Wire
22	Link
23	Interrupter
24	Rivet
25	Bracket
26	Screw
27	Yoke Half Assembly (w/ spherical bearing)
28	Fork Assembly (w/ spherical bearing)
29	Bearing (spherical)
30	Double Interrupter (Optional) Not Shown (for use with Strobex Model 135M-10 Series)

NOTE

Refer to R22 Illustrated Parts Catalog for part numbers and availability.

NOTE

Bolt heads on rotating components to be in direction of rotation.

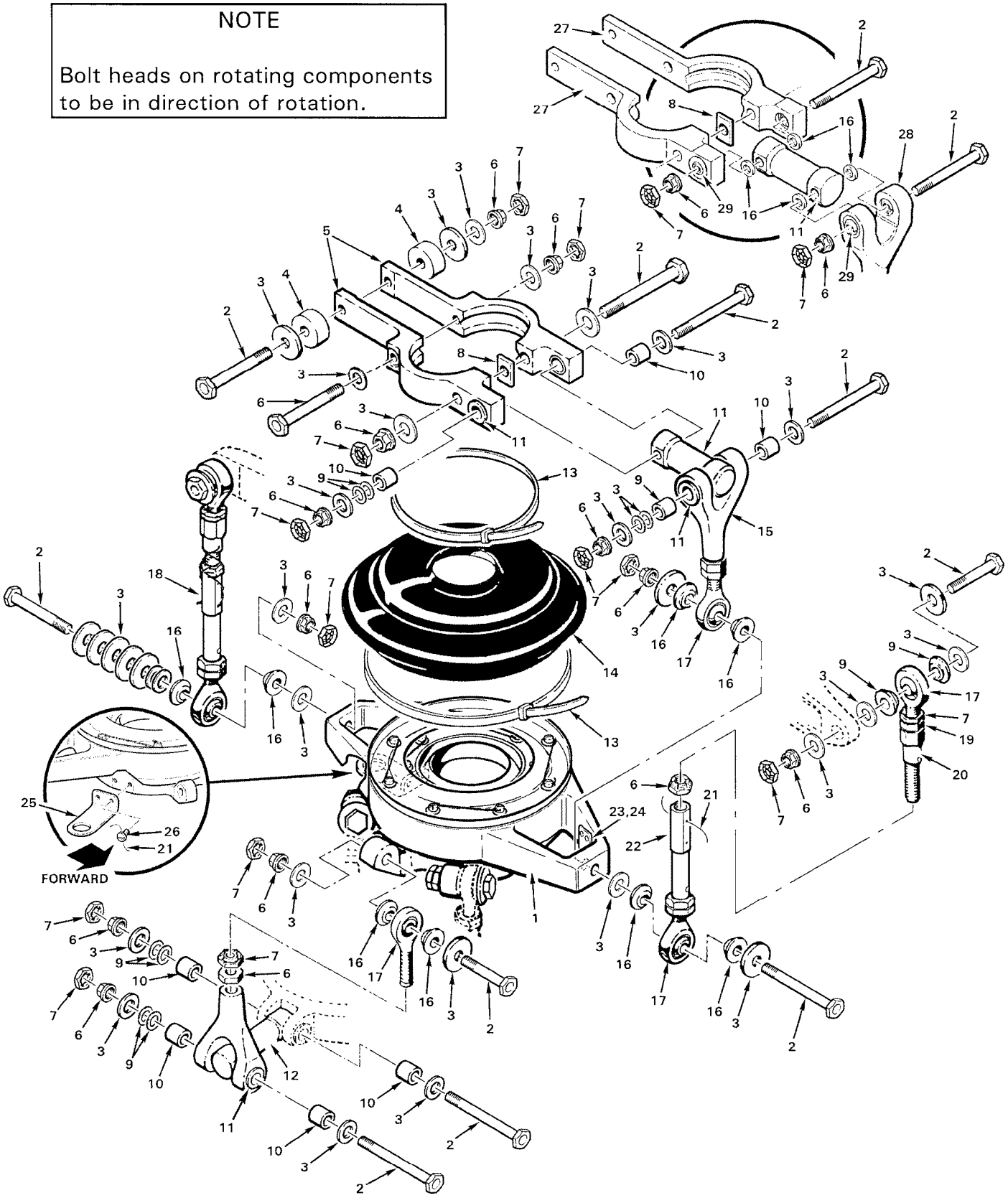

FIGURE 8-10 SWASHPLATE INSTALLATION

Intentionally blank

8.413 Reserved

8.414 Reserved

8.415 Reserved

This page intentionally left blank.

This page intentionally left blank.

8.416 Shimming Upper (Unflanged) Spherical Sleeve with Aluminum Ball

Measure space between top of upper spherical sleeve to top surface of lower swashplate. Determine required A209 spacer thickness by installing a spacer that will completely fill the space. (A209 spacers are available in increments of 0.005 inch.)

a) Install shield plate. Torque screws to 17 in-lbs.

b) Use a spring scale (MT359-1 or equivalent) to pull down at bolt hole in upper swashplate arm as shown in Figure 8-12A. The force required to tilt the swashplate must be free-without-looseness to five pounds maximum, measured while moving; do not use breakaway reading.

c) Use a thicker or thinner A209 spacer to adjust swashplate tilting force. Increase spacer thickness to increase force required to tilt swashplate.

8.500 TAIL ROTOR CONTROLS

8.510 Tail Rotor Pedals (Standard or Removable)

8.511 Tail Rotor Pedal Removal

a) Remove the landing light cover, belly cover and cabin cover between the seats (horizontal).

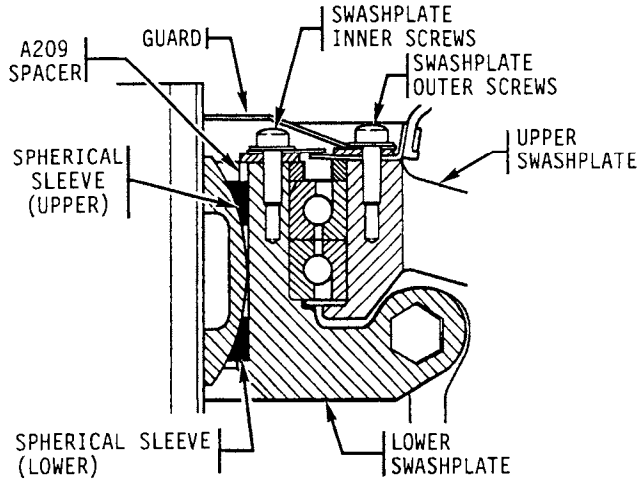

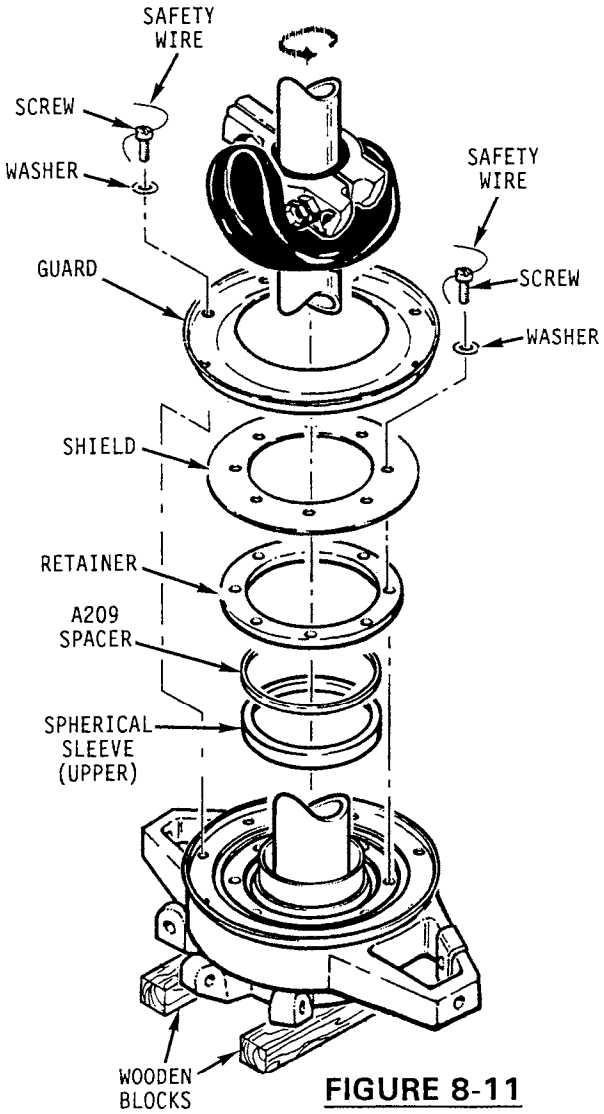

FIGURE 8-11

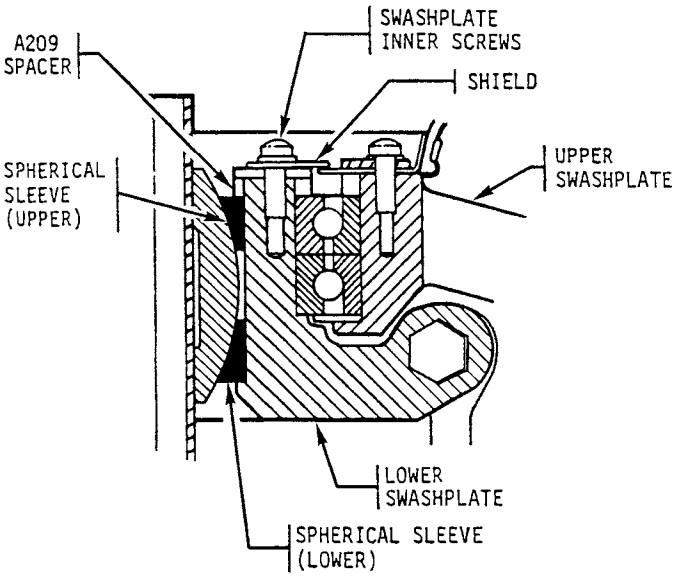

SWASHPLATE CUTAWAY
A209 SPACER (SHIM)
UNFLANGED SLEEVE

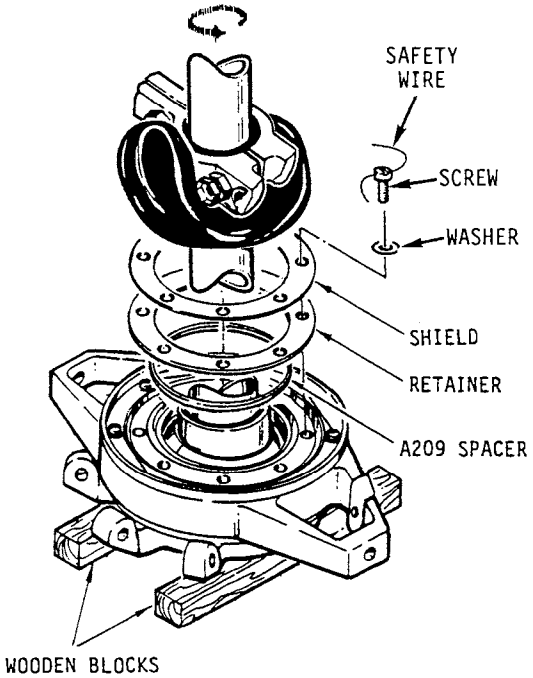

FIGURE 8-12

SWASHPLATE SHIMMING WITH A209 SPACER

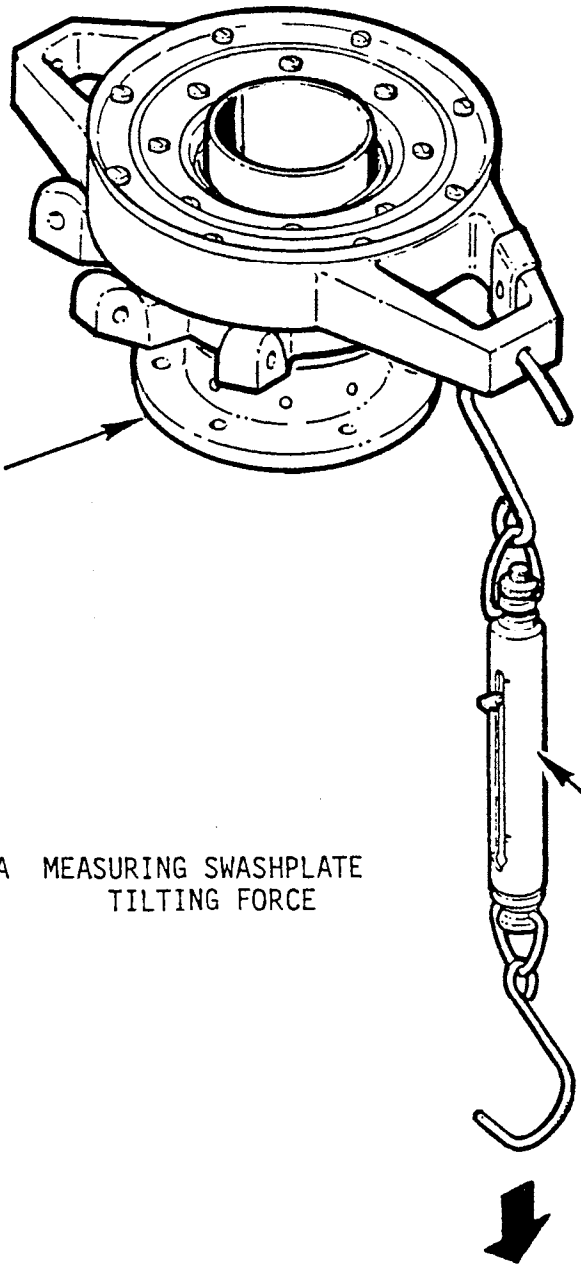

FIGURE 8-12A MEASURING SWASHPLATE TILTING FORCE

8.511 Tail Rotor Pedal Removal (cont'd)

b) Drill out the pop rivets holding the landing light bracket to the fiberglass chin with a #30 drill bit and remove.

c) Remove the two NAS1304-9 bolts holding the tail rotor push-pull tubes to the A317-1 tail rotor bellcrank (lower).

d) Pull the left tail rotor pedal aft, then working through the landing light access in the chin, disconnect the NAS1304-9 bolt that holds the A121-11 push-pull tube to the left pedal assembly.

e) Leaving the left pedal in the full aft position, pull the right pedal fully aft and disconnect the NAS1304-9 bolt that holds the A121-9 tube to the right pedal assembly.

f) Remove both push-pull tubes from the aircraft through the chin access.

g) Lift carpet carefully from the floor on both sides and remove from the cabin.

h) Remove the eight (8) screws that hold the access plates between the pedal assemblies and remove the plates.

i) The next step will require two (2) people. With someone holding the NAS1303-20 bolts from above that hold the A318-1 bearing block halves together, reach through the chin access and remove the NAS679-A3 nuts.

j) Remove the lower bearing block halves.

k) Remove the tail rotor pedals one at a time by lifting one end and allowing the other to drop into the chin. They can be removed from either the right or the left side.

NOTE

On reassembly the right pedal assembly is mounted forward in the bearing blocks and the left is mounted aft.

8.511 Tail Rotor Pedal Removal (cont'd)

NOTE

Pedal blocks (upper and lower) are machined matched set as indicated by matching letter or number on the upper and lower portion of blocks. DO NOT MIX THEM or alignment problems may develop on installation.

8.512 Tail Rotor Pedal Installation

a) Fill the grooves in the pedal bearing blocks with A257-1 grease.

b) Install the pedal assemblies into the bearing blocks and torque the bearing block attach bolts to 40 in.-lb plus nut drag.

NOTE

If a force greater than 5 lbs is required to move pedals, check the bearing blocks to ensure they are matched correctly.

c) Install the A121-9 and 11 push-pull tubes. The A121-9 will connect to the upper A317-1 bellcrank attach point and the left pedal assembly. The A121-11 will connect to the lower A317-1 bellcrank attach point and the right pedal assembly. Torque the attach bolts to 100 in.-lb plus nut drag. Install palnuts.

NOTE

The bolts attaching the push-pull tubes to the pedal assemblies must have their head toward each other for clearance.

d) Install the pedal cover plates and carpeting.

e) Pop rivet the landing light bracket to the chin and install the landing lights.

8.520 A317-1 Lower Bellcrank

8.521 A317-1 Lower Bellcrank Removal

a) Remove lower belly panel.

b) Disconnect the attaching hardware to the A121-9 and -11 push-pull tubes at the A317-1 bellcrank.

8.521 A317-1 Lower Bellcrank Removal (cont'd)

c) Disconnect the A315 support holding the A317 bellcrank by removing the 4 attach bolts and swing assembly forward.

d) Remove bolt attaching A317 bellcrank to the A315 support.

8.522 A317-1 Lower Bellcrank Installation

This procedure also covers rigging of the lower push-pull tubes and pedal assemblies. If re-checking of rigging is not required, disregard rigging portions and follow installation sequences.

a) Install A130-12 spacers and two A105-3 journals inside A316 bellcrank, A141-3 washers are installed against the A105-3 journals upon assembly to the A315 support outside of aircraft. Excess gap between A315 support attaching flanges and the A141-3 washers next to the assembled bellcrank may be filled with either A214-3 or A141-3 washers.

NOTE

When A317 bellcrank is installed, the 3/16"dia. rigging pin hole will be above the pivot point and the bellcrank itself will be aft of the bellcrank support.

Tighten pivot nut and check for smooth and free operation. Maximum spring scale drag of 2 lb is acceptable to move the bellcrank. Torque to 100 in-lb plus drag torque if acceptable.

If a force in excess of 2 lbs. is required to move the bellcrank, see Section 8.600 for A139-1 bearing reaming and spotface procedure.

b) Temporarily attach the A315-1 and A317-1 into aircraft to check for proper push-pull tube rigging length. Insert rigging pin thru the cabin assembly into the A317-1 bellcrank for rigging. Temporarily attach A121-9, 11 and 13 push-pull tubes to the A317.

Place the left and right pedals together at the mid (neutral) travel position. Place a 2.90 inch spacer between each inside pedal and stop. Adjust the rod ends on the A121-9 and A121-11 push-pull tubes as required to insert a bolt through the rod end and the A317-1 bellcrank. Check push-pull tube rod end and the A317-1 bellcrank. Check push-pull tube rod end witness holes for engagement.

8.522 A317-1 Lower Bellcrank Installation (cont'd)

c) After adjusting pedal travel, remove the rigging pin and apply full left pedal and adjust A121-13 push-pull tube to obtain .06" minimum clearance of the A013-3 bellcrank and the vertical firewall. Adjust push-pull tube as required.

NOTE

It is permissible for the bellcrank arm to touch and deflect acoustical foam, as long as it does not interfere with free movement and full travel of the controls.

d) With the A315 support and A317 bellcrank attachment, disconnected from the keel panels (A121-9 and -11 push-pull tubes disconnected) slide bellcrank forward.

NOTE

The A121-13 push-pull tube attach bolt must be installed with bolthead to the right side for clearance in vertical tunnel.

NOTE

On installation to the A317 bellcrank, an AN960-416 washer is installed to fill gap between rod end and the left plate of the A317 bellcrank (washer on left side of rod end).

e) Attach A315 bellcrank support to keel panels.

f) Attach the A121-9 and -11 push-pull tubes to the A317 bellcrank.

g) Torque all attaching NAS1304 bolts to 100 in.-lb plus nut drag. Install palnuts and torque stripe fasteners.

h) Check for smoothness and ease of operation. Move pedals full travel. Check for any interference between tubes, wires and structures.

8.522 C317-2 Lower Forward Bell Crank Installation (cont'd)

i) If required, check complete Tail Rotor rigging if changes to A121-9, -11, or -13 push-pull lengths have been made.

j) Verify all attach bolts and jamnuts torqued per Fastener Torques Section 1.300.

k) Install panels.

8.530 A013-3 Upper Bellcrank

8.531 Bellcrank Removal

1. Remove A121-15 push-pull tube.

2. Remove belly inspection panel.

3. Disconnect A121-9 and -11 at A317 bellcrank.

4. Disconnect A315 and A317 bellcrank with A317 bellcrank attached.

5. Slide A315 and A317 bellcranks with A121-13 push-pull tube attached up to disconnect -13 push-pull tube at upper bellcrank.

NOTE
Upper bellcrank needs to be rotated as far aft as possible to remove A121-13 push-pull tube attach bolt.

6. Remove upper bellcrank attach bolt. Catch all A214-2 and A141-3 washers installed as bolt is remove.

7. Remove upper bellcrank from structure.

8.532 Bellcrank Installation

1. Install A130-12 spacer and two A105-3 journals inside A013-3 bellcrank. Ream A139 bearing with 0.375/0.376 inch dead sharp reamer if required for journal's smooth installation.

2. Install bellcrank with A141-3 washers bellcrank with A141-3 washers next to blue Turcite A139-1 bearings. If gap exists between A141-3 washers and outboard support, fill either with A214-3 or A141-3 washers.

3. Torque attach bolt per Section 1.320. Install palnut.

8.532 A013-3 Upper Bellcrank Installation (cont'd)

4. Check for smoothness and ease of operation.

5. Attach A121-9, -11 and -13 push-pull tubes along with A315 and A317 bellcrank assemblies, following procedure in Section 8.522.

> **CAUTION**
>
> A121-13 push-pull tube to A013-3 upper bellcrank attach bolt head must point to right side of helicopter for clearance.

6. Install the A121-15 push-pull tube.

7. Check rigging if necessary.

8. Torque all attaching bolts and jamnuts per Section 1.300.

9. Check for smoothness and ease of operation. Move pedal full travel, check for any interference between tubes, wires and structures.

10. Install panels.

8.540 A331-1 Intermediate Bellcrank

8.541 A331-1 Intermediate Bellcrank Removal

1. Disconnect A121-15 and -17 push-pull tubes from A331-1 bellcrank.

2. Disconnect A331-1 attach bolt and remove bellcrank.

8.542 A331-1 Intermediate Bellcrank Installation

Install two A105-3 journals into bellcrank bearings. An A141-3 washer is required on each side of bellcrank to A139-1 bearings. (Ream A139-1 bearing with 0.375/0.376 inch dead sharp ream if required for journal's smooth installation).

> NOTE
>
> If required for A121-17 attach bolt clearance with the scroll two AN960-416 washers may be installed between the bell crank and the frame to raise the bellcrank. This will require use of NAS1304-40 bolt, to attach bellcrank to frame.

8.542 A331-1 Intermediate Bellcrank Installation (cont'd)

a) Torque to 100 in-lb plus nut drag. Install palnuts.

b) Check for smoothness and ease of operation.

c) Connect A121-15 and -17 push-pull tubes. A214-3 safety washers are required under the boltheads.

d) Re-rig if push-pull tube lengths were altered.

e) Move pedals full travel, check for any interference between tubes, wires, components or structures.

8.550 A120-1 Aft Bellcrank

8.551 A120-1 Aft Bellcrank Removal

a) Disconnect A121-17 push-pull tube from A120 aft bellcrank.

b) Disconnect bellcrank pivot from attach bolt connected to tail rotor gearbox.

c) Remove nut holding bellcrank to the pitch control. Remove bellcrank and reinstall nut and shims found between bellcrank and pitch control for bellcrank installation.

8.552 A120-1 Aft Bellcrank Installation

See A031 Pitch Control Installation (See Section 8.562).

8.560 A031 Pitch Control

8.561 Pitch Control Removal

a) Remove tail rotor hub and blade assembly. Mark corresponding tail rotor blade grips, tail rotor pitch change to each of the pitch control ears, for later reinstallation so re-rigging is not required.

b) Disconnect and remove aft bellcrank per Section 8.551.

c) Remove pitch control from tail rotor output shaft.

8.562 Pitch Control Installation

a) Slide A031-1 pitch control assembly onto output shaft.

b) Position A120-1 bellcrank assembly on the tail rotor gearbox and install NAS1304-25 bolt, one AN960-416 washer under bolt head, two MS20002-4 washers, one one each side of the bearing and NAS679-A4 nut.

8.562 Pitch Control Installation (cont'd)

b) Measure the gap existing between the A120-1 bellcrank ear and the flats on the A125-1 pitch control stud. Install sufficient A117-20, -21 and -22 washers between bellcrank and stud to completely fill the gap but not apply any axial preload on the spherical bearing after all the nuts are tightened. The clearance tolerance is plus or minus .003". Install one AN960-416L washer and NAS679-A4 nut on protruding end of stud. Torque nut to 70 in.-lbs plus nut drag while holding stud from rotating. Install palnut.

c) Torque nut on A120-1 bellcrank pivot to 100 in.-lbs plus nut drag. Install palnut.

d) Attach aft end of A121-17 push-pull tube to the A120 -1 bellcrank and A214-3 safety washer under nut next to rod end. Torque nut to 100 in.-lb. plus nut drag. Install palnut.

e) Install pitch control links per Section 8.572.

f) Install tail rotor hub and blade assembly (See Section 9.212).

g) Ensure all bolts, jamnut and palnuts torques per Fastener torques, Section 1.300.

8.570 Tail Rotor Pitch Links

8.571 Tail Rotor Pitch Link Removal

NOTE

To ensure proper rigging upon re-installation of pitch links, mark pitch links to corresponding blade grip and pitch control ear.

a) Disconnect the two attach bolts on either rod end of the pitch link.

b) Remove pitch link.

8.572 Tail Rotor Pitch Link Installation

WARNING

A214-3 safety washers are to be installed next to rod end.

8.572 Tail Rotor Pitch Link Installation (cont'd)

WARNING

Both pitch links must be same part number (same type and material). Mixing one-piece with adjustable-length pitch links is prohibited. Mixing steel one-piece with aluminum one-piece pitch links is prohibited.

Refer to Figure 9-11.

1. If installing one-piece pitch link(s); connect pitch link to pitch link control arm and blade pitch horn.

2. If installing new, adjustable-length pitch link(s) based on old pitch link length:

   a. Match pitch link to proper blade pitch horn and pitch control arm and connect pitch link. Torque attach bolts per Section 1.320. Install palnuts, torque per Section 1.320, and torque stripe per Figure 2-1. Repeat for opposite blade.

   b. Torque attach bolts per Section 1.320. Verify proper rod end centering and adjust as required. Install palnut, torque per Section 1.320, and torque stripe per Figure 2-1. Repeat for opposite blade.

   c. Check tail rotor control rigging per Section 10.140.

3. If installing new, adjustable-length pitch links (nominal length setting):

   a. Assemble male rod end, with jam nut and palnut installed, into female rod end. Adjust rod ends until a dimension of 2.360 inches, measured between rod end bearing centers.

   b. Attach pitch link female rod end to outboard side of pitch control arm. Torque bolt per Section 1.320. Install palnut, torque per Section 1.320, and torque stripe per Figure 2-1.

   c. Connect pitch link male rod end to blade pitch horn. AN960-416, AN960-416L, or A141-14 washers may be under nut for chordwise balance. Torque bolt per Section 1.320. Install palnut, torque per Section 1.320, and torque stripe per Figure 2-1.

   d. Torque pitch link jam nut and palnut per Section 1.320 and torque stripe per Figure 2-1. Repeat steps a. thru d. for opposite blade.

   e. Check tail rotor control rigging per Section 10.240.

8.572 Tail Rotor Pitch Link Installation (cont'd)

4. Operate the tail rotor controls thru their entire operating range an verify no binding or abnormality exists.

5. Dynamically balance tail rotor per Section 10.240.

8.600 A203 YOKE AND A205 FORK ASSEMBLY (Figure 8-10)

Three different bearing types have been used in A203 yoke and A205 fork assemblies: A139-1 blue-plastic Turcite journal bearings, B115-1 spherical bearings, and C648-2 Teflon-lined journal bearings. More than one type bearing may be used in an installation, but each pivot axis must have same type bearings.

8.610 Bearing Removal

Care must be taken not to damage yoke or fork assemblies during bearing removal.

A139-1 Turcite bearings may be removed from A203 yoke or A205 fork assemblies with a broken-screw extractor or by pressing or tapping them out with a small brass or aluminum drift.

B115-1 Spherical bearings and C648-2 journal bearings may be removed with a press. Press from inner side of bearings while supporting outboard side of yoke or fork. Use a socket or other suitable pressing tool to apply the force.

8.615 C648-2 Bearing Installation (0.5625/0.5630 inch diameter bearing bores)

1. Clean mating surfaces of A205 fork or A203 yoke where C648 bearing is installed. Deburr any sharp edges that may damage bearings during installation.

2. Coat yoke or fork bearing bores with zinc chromate or epoxy primer. While primer is still wet, press in C648 bearing while supporting backside of fork or yoke.

8.620 A139-1 Bearing Installation (0.499/0.501 inch diameter bearing bores)

a) Clean mating surfaces of A205 fork or A203 yoke where A139 bearing is installed. Deburr any sharp edges that may damage bearings during pressing operation.

b) Coat yoke or fork bearing bores with zinc chromate or epoxy primer. While primer is still wet, press in A139 bearing.

c) With both A139 bearings installed, ream inner bearing bores with a 0.375 inch dead sharp reamer. Using A105-11 journals as a gauge, continue to ream bores until a very light drag fit is achieved. It may be necessary to use a 0.376 or 0.377 inch reamer to obtain correct fit.

d) Place one A141-3 washer and one A105-11 journal on NAS6604 bolt. Insert bolt into A204-1 arm. Place second A105-11 journal and second A141-3 washer on bolt.

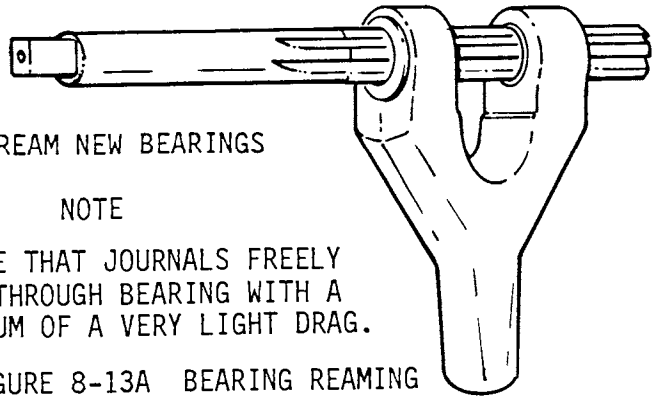

LINE REAM NEW BEARINGS

NOTE

ENSURE THAT JOURNALS FREELY MOVE THROUGH BEARING WITH A MAXIMUM OF A VERY LIGHT DRAG.

FIGURE 8-13A BEARING REAMING

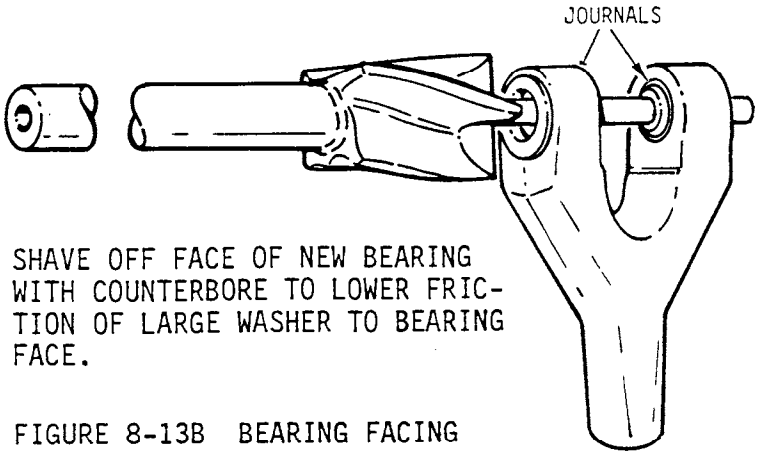

SHAVE OFF FACE OF NEW BEARING WITH COUNTERBORE TO LOWER FRICTION OF LARGE WASHER TO BEARING FACE.

FIGURE 8-13B BEARING FACING

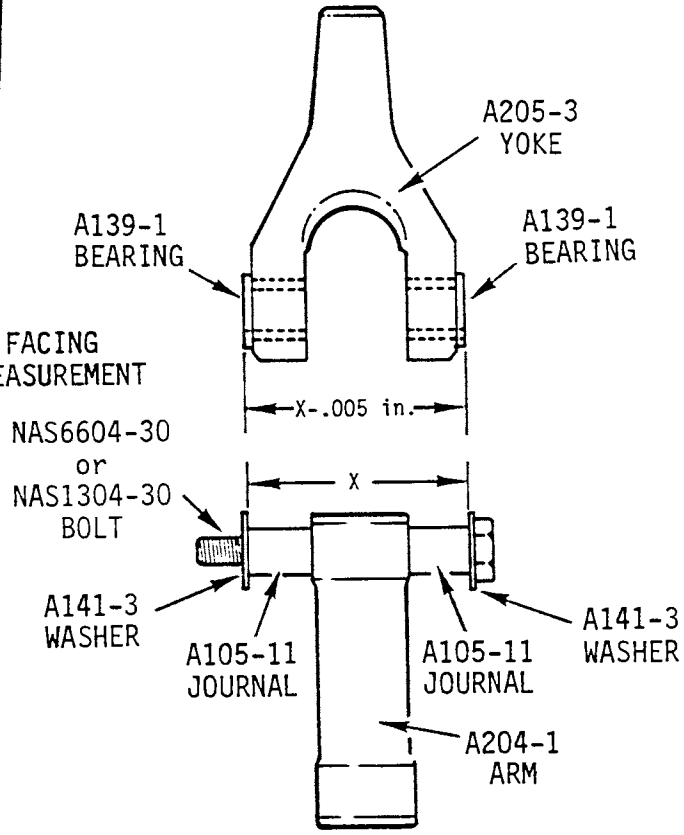

FIGURE 8-13C BEARING FACING WIDTH MEASUREMENT

FIGURE 8-13 BEARING REAMING, FACING, & WIDTH MEASUREMENT

8.620 A139-1 Bearing Installation (cont'd)

e) Measure the distance between the A141-3 washers with the washers held tightly against the journals. Using a one-inch spotface tool with a 0.25 inch pilot, lightly shave the face of each bearing until the measurement across the bearing faces is 0.005 inch less than the measurement between the A141-3 washers. When this dimension is achieved, do not shave any more material off the bearing faces (See Figure 8-13C).

f) Reassemble the yoke or fork assembly and torque the NAS6604 (or NAS1304) bolt to 100 in.-lb plus nut drag. Check for freedom of movement with no play or drag.

8.630 B115-1 Bearing Installation

The B115-1 Bearing may be either interference-fit or Loctite®-secured slip-fit in the A203 yoke or A205 fork, depending on the diameter of the bearing bores.

8.631 Interference-Fit Bearings (0.6239/0.6244 inch diameter bearing bores)

a) Clean the bearing bores of the yoke or fork assembly. Deburr any sharp edges and inspect and remove any metal shavings in the bearing bores.

b) Heat the yoke or fork assembly to approximately 180 degrees Fahrenheit.

c) Coat one bearing bore with zinc chromate primer. While the primer is still wet, press in the B115-1 bearing to the bottom of the bore.

d) Coat the other bearing bore with a graphite solution (Lubri-Kote Type A or equivalent). Press in the B115-1 bearing until it is 0.010 to 0.020 inch above the top of the bearing bore.

8.632 Loctite®-Secured Slip-Fit Bearings (0.6255/0.6260 inch diameter bearing bores)

a) Clean the yoke or fork assembly bearing bores of old Loctite®.

b) Measure the bearing bores; maximum allowable diameter is 0.6260 inch.

c) Lightly coat the B115-1 bearing outer races with Loctite® 271 compound and install the B115-1 bearings into the bearing bores. Wipe off excess Loctite®. Do not allow Loctite® to enter the B115-1 bearing.

LOCTITE® IS A REGISTERED TRADEMARK OF LOCTITE CORP. NEWINGTON, CT 06111

8.630 B115-1 Bearing Installation (cont'd)

d) While the sealant is still wet, assemble yoke or fork assembly per Section 8.640. Wait until sealant has been allowed to cure per manufacturer's instructions prior to checking bearing pivot force.

8.640 Yoke and Fork Assembly Installation

1. Assemble fork or yoke assembly. Torque NAS6604 (or NAS1304) bolt per Section 1.320.

2. Place a torque wrench on bolt head at fork or yoke pivot point. The force required to pivot assembly must be 5 in-lbs or less.

3. To reduce pivot force for A139-1 bearings:

   a. Disassemble fork or yoke assembly.

   b. Ream inner bores of A139-1 bearings; a very slight oversized bore may be required.

   c. Reassemble yoke or fork assembly. Recheck pivot force.

4. To reduce pivot force for interference-fit B115-1 bearings:

CAUTION
Do not rotate bearing with a drill motor to reduce pre-load as this may damage Teflon® liner and cause premature failure.

   a. Place a 7/16 inch socket against outer race of the bearing installed with graphite solution. Tap bearing lightly to relieve axial preload caused by torquing bolt. The pivot force should drop with this slight movement of bearing race. If outer bearing race is moved too far inward, bearing will be preloaded in opposite direction and pivot assembly will have to be disassembled so that bearing can be pressed back into its original position. The pivot assembly will have to be reassembled and retorqued as described above.

   b. If pivot force is still too high, replace interference-fit bearing yoke or fork assembly with a adhesive-secured slip-fit bearing yoke or fork assembly.

   c. Reassemble yoke or fork assembly per Figure 8-10. Recheck pivot force.

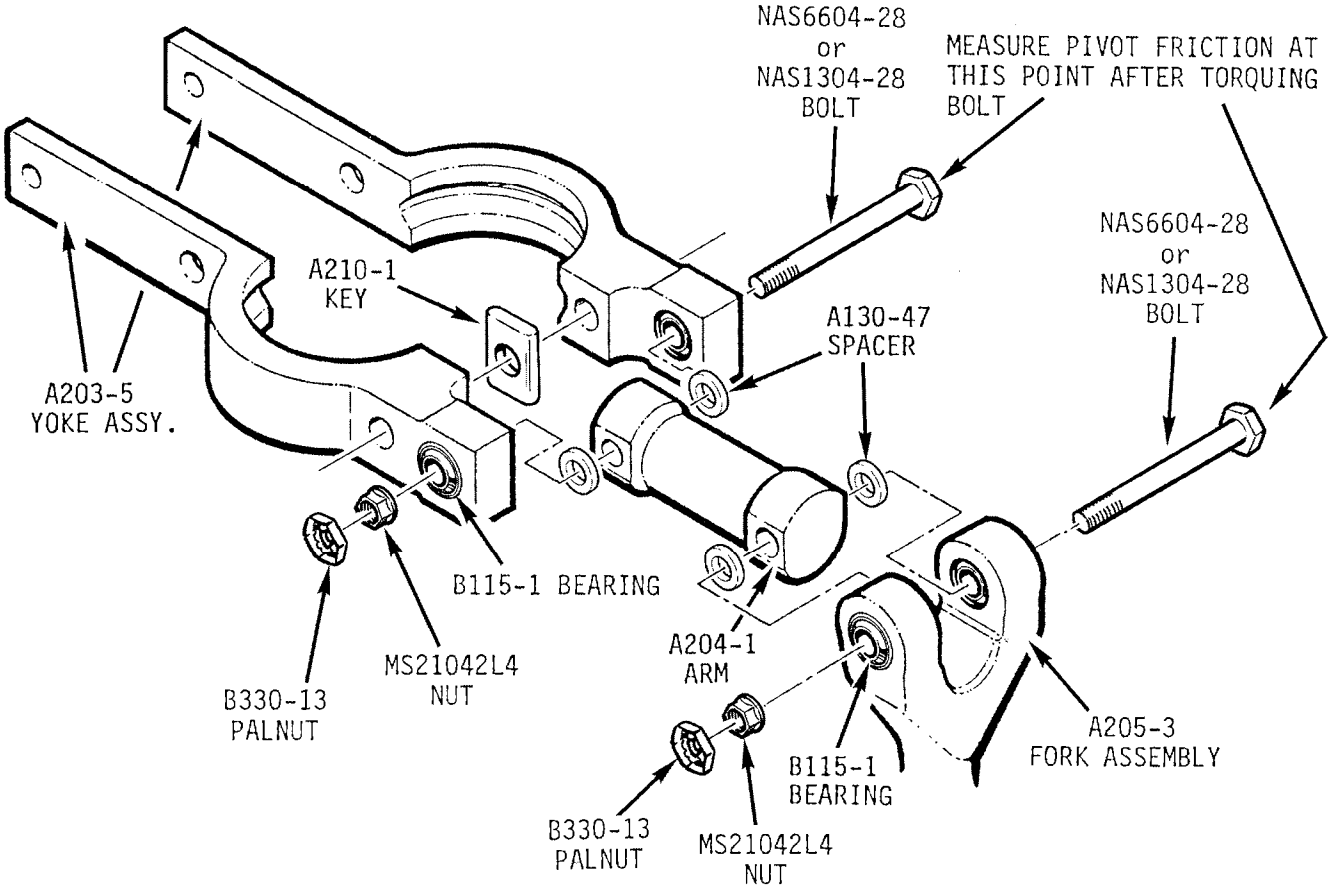

FIGURE 8-14 B115-1 BEARING INSTALLATION

CHAPTER 9

ROTOR SYSTEMS

Section	Title	Page
9.000	Rotor Systems	9.1
9.100	Main Rotor	9.1
9.110	Main Rotor Blades	9.1
9.111	Main Rotor Blade Removal	9.1
9.112	Main Rotor Blade Installation	9.4
9.113	Boot Removal	9.5
9.114	Boot Installation	9.5
9.115	Filling Pitch Bearing Housing	9.7
9.116	Drilling Main Rotor Hub Bolts	9.7
9.120	Main Rotor Hub	9.8
9.121	Main Rotor Hub Removal	9.8
9.122	Main Rotor Hub Installation	9.8
9.123	Main Rotor Hub Journal and Shim Calculations	9.11
9.124	Adjustment of Hinge Friction	9.14
9.125	Shifting the Main Rotor Hub	9.14
9.126	Main Rotor Hub Bearing Replacement	9.15
9.130	Inspection of Main Rotor Blades	9.17
9.131	Scratches and Corrosion on Blade Skins and Doublers	9.17
9.132	Dents and Local Deformations	9.19
9.133	Root Fitting Damage	9.21
9.134	Voids	9.23
9.140	Repair of Main Rotor Blades	9.25
9.141	Trimming	9.26A
9.142	Painting	9.26A
9.200	Tail Rotor	9.26C
9.210	Tail Rotor Assembly Removal	9.26C
9.212	Tail Rotor Installation with Spherical Teeter Bearings	9.27
9.213	Tail Rotor Installation with Elastomeric Teeter Bearings	9.30
9.214	Tail Rotor Hub Spherical Bearing Replacement	9.32A
9.215	Tail Rotor Hub Elastomeric Bearing Replacement	9.32B
9.220	Inspection and Repair of Tail Rotor Blades	9.33

Intentionally Blank

CHAPTER 9

ROTOR SYSTEMS

9.000 Rotor Systems

The main rotor has two all-metal blades mounted to the hub by coning hinges. The hub is mounted to the shaft by a teeter hinge. The coning and teeter hinges use self-lubricated bearings. Droop stops for the main rotor blades provide a teeter hinge friction restraint which normally prevents the rotor from teetering while starting or stopping. Pitch change bearings for each blade are enclosed in a housing at the blade root. The housing is filled with oil and sealed with an elastomeric boot. Each blade has a thick stainless steel spar at the leading edge which is resistant to corrosion and erosion. The skins are bonded to the spar approximately one inch aft of the leading edge. Blades must be refinished if the paint erodes to bare metal at the skin-to-spar bond line. Bond may be damaged if bond line is exposed.

The tail rotor has two all-metal blades and a teetering hub with a fixed coning angle. The pitch change bearings have self-lubricated liners. The teeter hinge bearings are elastomeric. The tail rotor blades are constructed with aluminum skins and forged aluminum root fittings.

9.100 Main Rotor

Refer to R22 Illustrated Parts Catalog (IPC) Chapter 62.

9.110 Main Rotor Blades

WARNING

Due to potentially destructive results, use of blade tape (anti-erosion tape) is prohibited.

9.111 Main Rotor Blade Removal

Refer to Figure 9-1A. Four people will be required to remove the blades. One person must support the blade near the blade tip while another supports the root and removes or installs the attachment bolt.

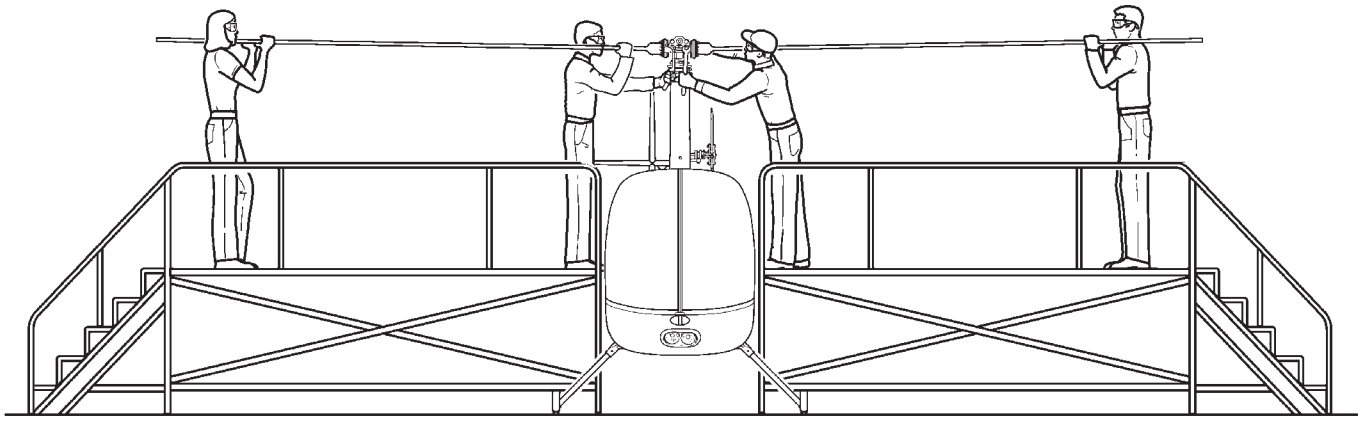

FIGURE 9-1A SUPPORTING MAIN ROTOR BLADES DURING BLADE REMOVAL OR INSTALLATION

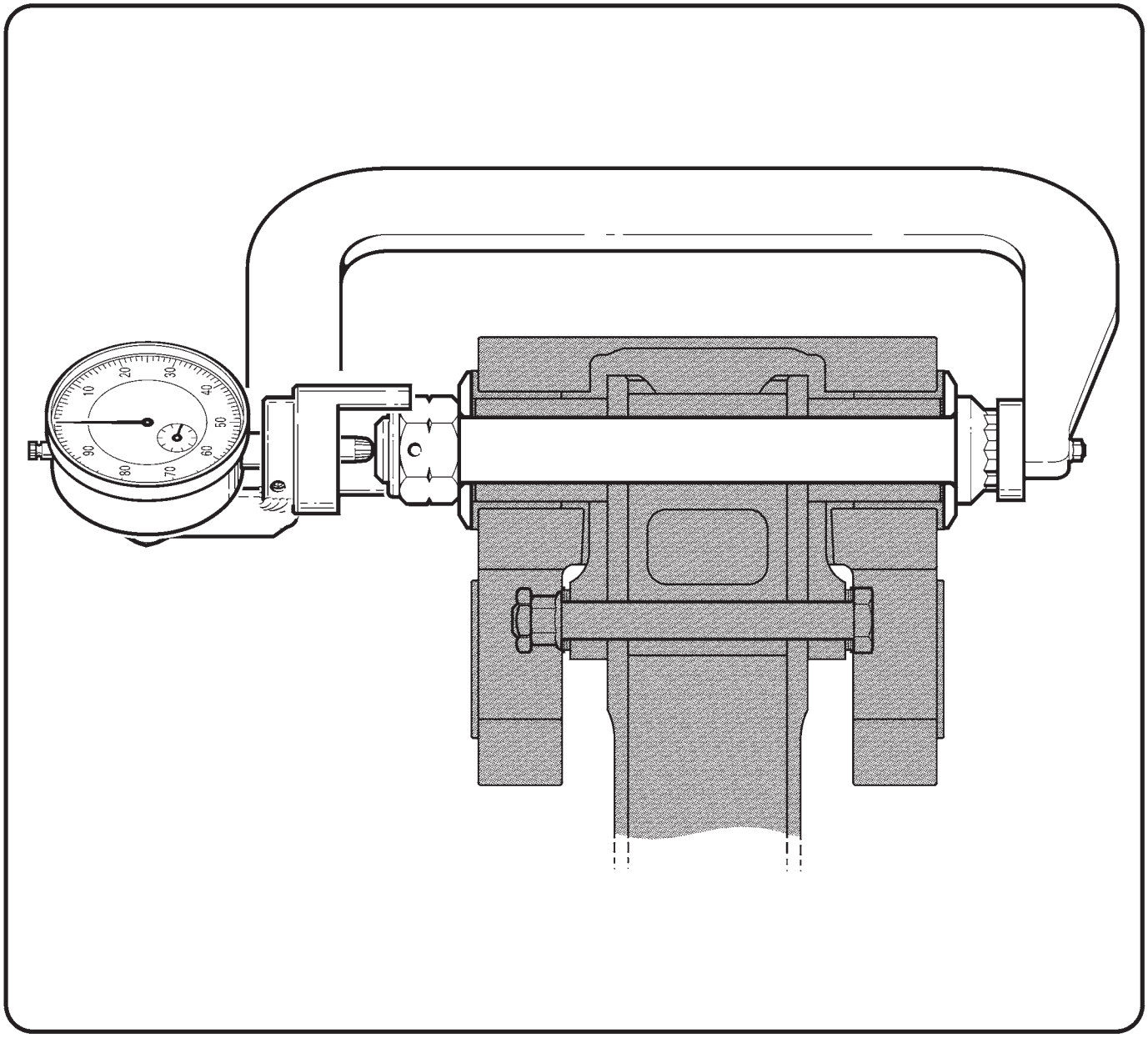

FIGURE 9-1B MEASURING BOLT STRETCH (SHOWN ON TEETER BOLT, BLADES REMOVED)

9.111 Main Rotor Blade Removal (continued)

1. Mark one main rotor blade and its corresponding hub location, pitch link, and retaining nut & bolt with "X" using a marker or grease pencil. Mark opposite blade and its hub location, pitch link, and retaining nut & bolt with "O".

2. Measure and record coning hinge axial gaps per Figure 9-3A.

3. Remove hardware securing main rotor pitch links to blade pitch horns.

4. Remove cotter pins and loosen blade coning hinge retaining nuts until finger tight.

CAUTION

After removing one blade, support installed blade in a level position until it is removed.

5. Remove nut, thrust washer, and trailing-edge shims (if used) from one blade. Cone blade as required to position spindle tusk off of droop stop. Supporting blade at root, rotate pitch horn down, and remove hinge bolt and thrust washer.

CAUTION

Do not drop journals (inside hub bearings) which can slide out when removing blade bolt.

NOTE

Blade installation hardware is specific to each blade, each blade's leading and trailing edge, and each blade's location in hub. It is good practice after blade removal to install hardware in hub finger tight exactly as removed.

6. Place blade on a cushioned surface to prevent damage to skins.

7. Remove opposite blade per steps 5 and 6.

9.112 Main Rotor Blade Installation

1. Identify hub and spindle part numbers and ensure correct corresponding installation hardware.

2. Check teeter hinge friction and adjust as required per § 9.124.

3. If coning hinge axial gap recorded during blade removal was beyond tolerance, or if corresponding hub bearing(s) or spindle was replaced, perform coning hinge journal and shim calculation per § 9.123.

4. Level hub and insert journals in hub bearings. Install thrust washer on blade bolt.

5. Insert main rotor blade spindle in hub and align spindle and journal bores. Cone blade as required to position tusk off of droop stop. Rotate pitch horn down and install hinge bolt at leading-edge side.

> NOTE
>
> A bolt may be inserted from trailing-edge side to align spindle and journal bores (it is pushed out as coning hinge bolt is installed).

6. Install trailing-edge shims (if used) and thrust washer. Apply light coat A257-9 anti-seize to bolt threads and nut face. Install nut finger tight.

> NOTE
>
> Do not allow anti-seize to contact journals, shims, or hub bearing areas. These areas must be clean and dry.

> **CAUTION**
>
> After installing one blade, support blade in a level position until opposite blade is installed.

7. Install opposite blade per steps 4 thru 6.

8. Tighten nut on coning hinge bolt until journals and thrust washer are firmly seated. Loosen nut until both thrust washers can be freely rotated.

9. Refer to Figure 9-1B. Install MT122 main rotor bolt elongation (stretch) tool on hinge bolt. Zero dial indicator by rotating dial face and lock dial. Remove tool.

10. Using wrenches with at least 150 ft-lb torque capacity, tighten nut until drilled holes in nut and bolt align. Install MT122 tool and measure bolt elongation:

> **WARNING**
>
> **Do not under-stretch or over-stretch teeter or coning hinge bolts to obtain proper clamping force. Under-stretching or over-stretching can cause failure.**

9.112 Main Rotor Blade Installation (continued)

10. a. A154-1 hub with NAS630-80 (or MS21250-10080) coning hinge bolts:

    i. If bolt elongation is 0.015–0.017 inch, remove tool and install a new cotter pin wet with epoxy primer.

    ii. If bolt elongation is not 0.015–0.017 inch, remove old nut and old bolt and install a new bolt and a new nut. Stretch new bolt per § 1.330, and drill new nut and bolt per § 9.116. Install a new cotter pin wet with epoxy primer.

    b. B370-1 hub with NAS632-82 (or MS21250-12082) coning hinge bolts:

    i. If bolt elongation is 0.010–0.012 inch, remove tool and install a new cotter pin wet with epoxy primer.

    ii. If bolt elongation is not 0.010–0.012 inch, remove old nut and old bolt and install a new bolt and a new nut. Stretch new bolt per § 1.330, and drill new nut and bolt per § 9.116. Install a new cotter pin wet with epoxy primer.

11. Install hardware securing main rotor pitch link to pitch horn. Standard torque hardware per § 1.320 and torque stripe per Figure 2-1.

12. Perform steps 8 thru 11 on opposite blade.

13. Track and balance main rotor blades per § 10.230.

9.113 Boot Removal

1. Remove main rotor blades per § 9.111.

2. Place a suitable drain container below pitch horn. Remove two B289-2 bolts and drain fluid.

3. Remove outer boot clamp and hold boot back to expose inner boot clamp. Remove inner clamp and peel boot from spindle.

9.114 Boot Installation

1. Visually inspect and verify boot is undamaged. Carefully stretch new boot over spindle.

2. Solvent-clean surfaces clamped by boot inner lip. Properly position boot inner lip; install A165-1 (inner) clamp assembly and tighten clamp to 2.330 ± 0.005 inch outside diameter. Rotate spindle and verify adequate clearance between clamp assembly and pitch horn.

NOTE
When installing inner clamp, ensure that shoulder of boot inner lip is not wedged beneath clamp or clamp may loosen in service. Inspect boot interior and verify no cuts or punctures.

3. Stretch boot outer lip over pitch horn flange. Rotate spindle and align pitch horn bolt hole with spindle bolt hole per Figure 9-1C. Install A165-7 (outer) clamp assembly and tighten clamp. Verify security.

4. Fill pitch bearing housing per § 9.115.

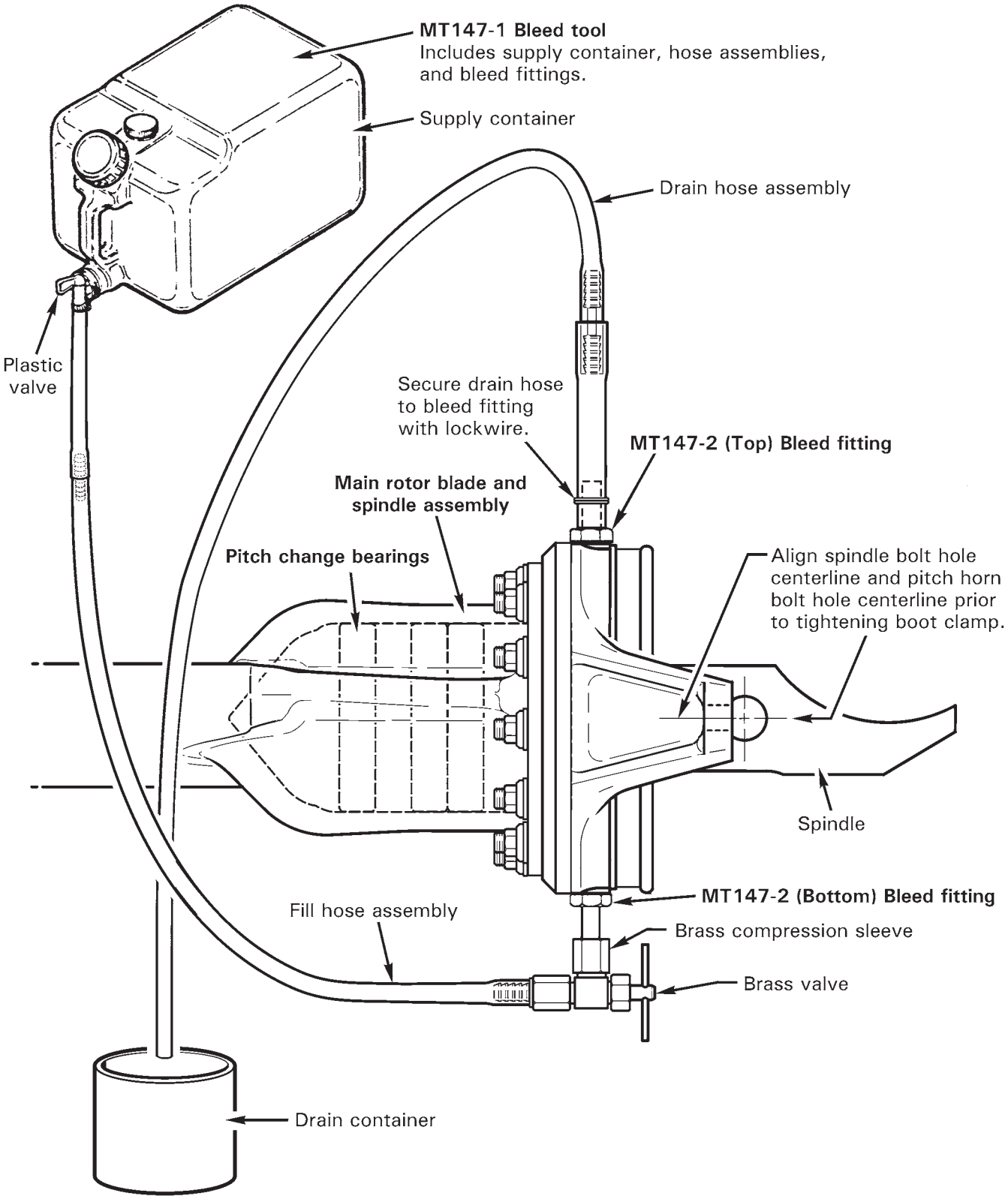

FIGURE 9-1C FILLING PITCH BEARING HOUSING

9.115 Filling Pitch Bearing Housing

> NOTE
>
> MT147-1 Main rotor blade spindle air bleed tool includes supply container, hose assemblies, and bleed fittings.

> **WARNING**
>
> **Refer to appropriate Material Safety Data Sheet (MSDS) and take necessary safety precautions when working in proximity to hazardous materials.**

1. Remove main rotor blades per § 9.111.
2. Refer to Figure 9-1C. Place a suitable drain container below main rotor pitch horn. Remove two B289-2 bolts from pitch horn and drain fluid.
3. Install MT147-2 bleed fittings into pitch horn openings. Attach drain hose assembly to (top) bleed fitting, secure with two wraps of lockwire. Position drain hose into drain container.
4. Place supply container with sufficient A257-4 fluid approximately 3 feet above spindle. Route fill hose assembly into drain container and open brass valve. Open supply container plastic valve and purge air from fill hose. Close valves.
5. Connect brass valve to (bottom) bleed fitting by tightening brass compression sleeve.
6. Open valves and fill spindle housing until no air bubbles are visible in drain hose assembly. Massage spindle boot, oscillate spindle, and raise blade tip up & down to remove trapped air.
7. Remove drain hose assembly and (top) bleed fitting, and install B289-2 bolt. Roll the blade over. After five minutes, inspect the boot for leaks. If no leaks are found, close valves, remove fill hose assembly brass valve and (bottom) bleed fitting, and install other bolt.
8. Torque B289-2 bolts per § 1.330 and torque stripe per Figure 2-1.
9. Repeat steps for opposite blade.

9.116 Drilling Main Rotor Hub Bolts

> NOTE
>
> Protect hub from damage due to chuck contact by wrapping chuck and/or covering hub edge with several layers of tape.

New bolts and nuts must be installed and bolts stretched per § 1.330 prior to drilling.

Using a 0.125-inch diameter Cobalt twist-drill and cutting oil, drill a hole through nut and bolt using an accessible pre-drilled hole in nut. The MT569-1 and MT569-6 (B370-1 hub coning hinge bolts) drill guide assembly will facilitate drilling a perpendicular hole. If a pre-drilled hole is inaccessible, completely loosen nut, slightly rotate bolt to favorable position, then special torque per § 1.330. Protect adjacent area from drilling debris.

9.120 Main Rotor Hub

9.121 Main Rotor Hub Removal

1. Remove main rotor blades per § 9.111.

2. Refer to Figure 9-2A. Mark rotor hub using a grease pencil, tape, or soft marker as follows:

   a. Indicate nut side of teeter bolt.
   b. Indicate chord arm side of drive shaft.

3. If same hub will be installed, measure teeter hinge friction per Figure 9-3B and record value.

4. Remove cotter pin, nut, A152 thrust washers, A117 shims, A106 journals, and bolt. Rotate hub as required and remove hub. Do not drop thrust washers or journals.

5. Reinstall bolt, thrust washers, shims, journals, and nut in rotor hub exactly as removed.

> **CAUTION**
>
> Main rotor chordwise balance is adjusted using A106 journals and A117 shims. If assembly stack-up is altered, an out-of-balance condition can occur.

9.122 Main Rotor Hub Installation

1. Clean and dry teeter hinge hardware using approved solvent per § 1.400. Inspect journals and thrust washers for chipping of chrome plating, corrosion, and/or wear grooves extending through chrome plating. Replace journal or thrust washer if any of these conditions exist.

2. If teeter hinge friction recorded during hub removal was less than 5 ft-lb or more than 15 ft-lb, if teeter hinge hub bearing(s) was replaced, or if previous installation information is unavailable, perform teeter hinge journal and shim calculation per § 9.123 Part A.

3. Refer to Figure 9-2A. Line up mark on hub with chord arm on drive shaft. Install teeter hinge bolt, thrust washers, shims, and journals (if previous installation information is available, install parts exactly as removed).

4. Coat nut face and bolt threads with A257-9 anti-seize compound, install and tighten nut, then loosen nut until both thrust washers can be freely rotated. Ensure journals do not “pinch” droop stops and fully contact drive shaft.

> **WARNING**
>
> **Do not allow anti-seize compound to contaminate drive shaft, journals, shims, or thrust washer inner faces. Contamination prevents proper joint clamp-up and may cause failure.**

5. Refer to Figure 9-1B. Install MT122 main rotor bolt elongation (stretch) tool on teeter bolt. Zero dial indicator by rotating dial face and lock dial. Remove tool.

9.122 Main Rotor Hub Installation (continued)

6. Using wrenches with at least 150 ft-lb torque capacity, tighten nut until drilled holes in nut and bolt align. Install MT122 tool and measure bolt elongation:

   a. If bolt elongation is 0.015–0.017 inch, remove tool and verify correct teeter hinge friction per § 9.124 Part A. Adjust teeter hinge friction as required.

   b. If bolt elongation is not 0.015–0.017 inch, remove old nut and old bolt and install a new bolt and a new nut. Stretch new bolt per § 1.330 and verify correct teeter hinge friction per § 9.124 Part A. Adjust teeter hinge friction as required. Drill new nut and bolt per § 9.116.

WARNING

Do not under-stretch or over-stretch teeter or coning hinge bolts to obtain proper clamping force. Under-stretching or over-stretching can cause failure.

7. Install a new cotter pin wet with epoxy primer.

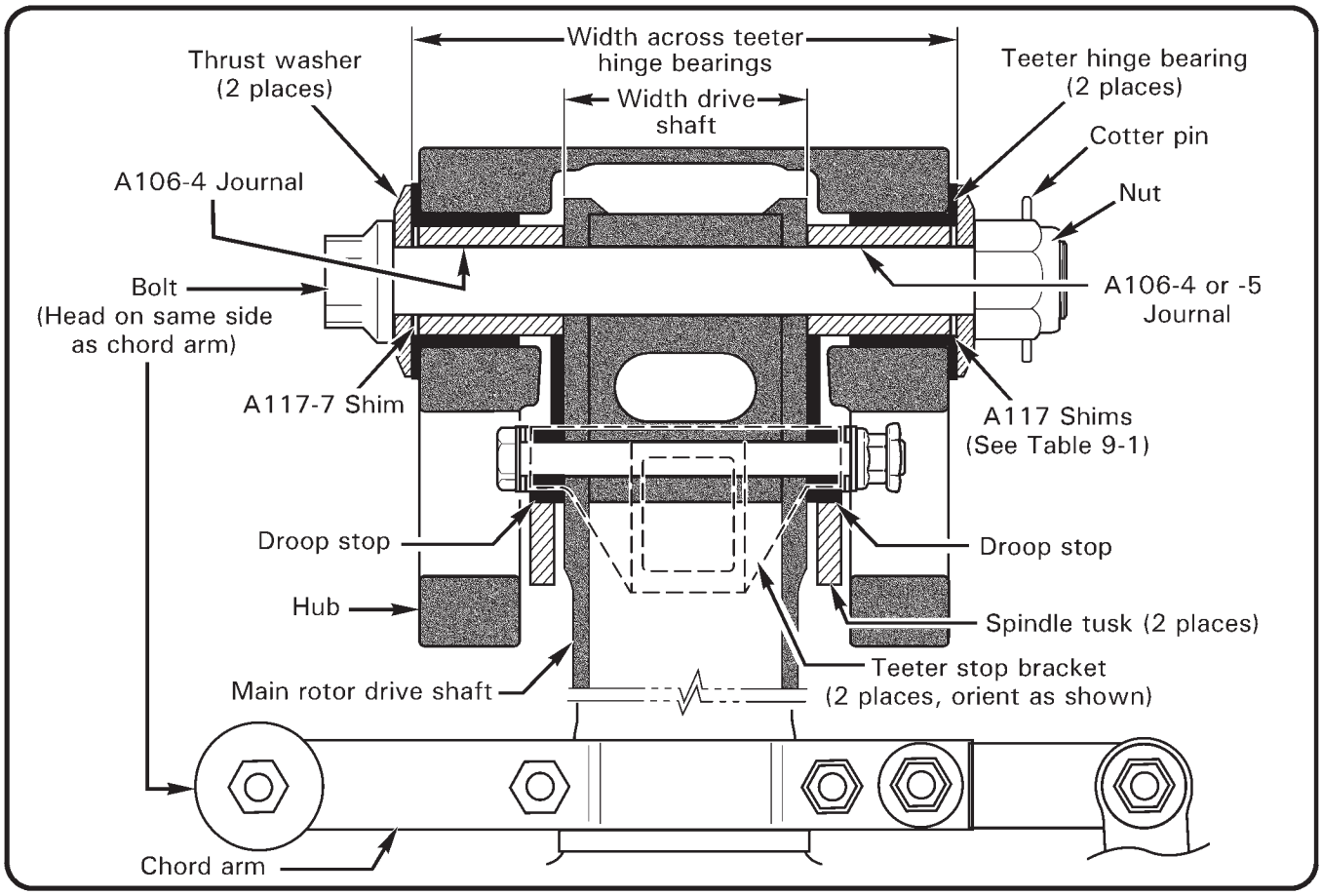

FIGURE 9-2A TEETER HINGE (HUB INSTALLATION)

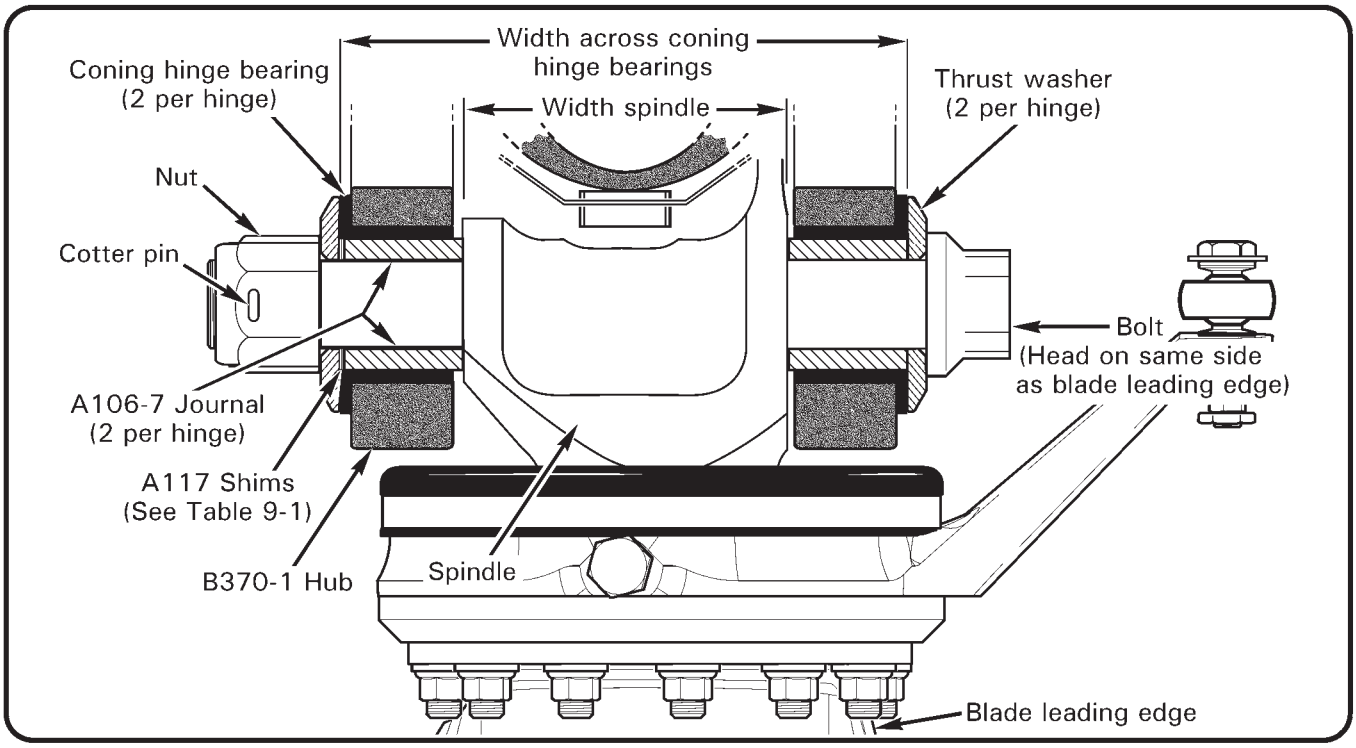

FIGURE 9-2B B370-1 HUB CONING HINGE (BLADE INSTALLATION; VIEW LOOKING DOWN)

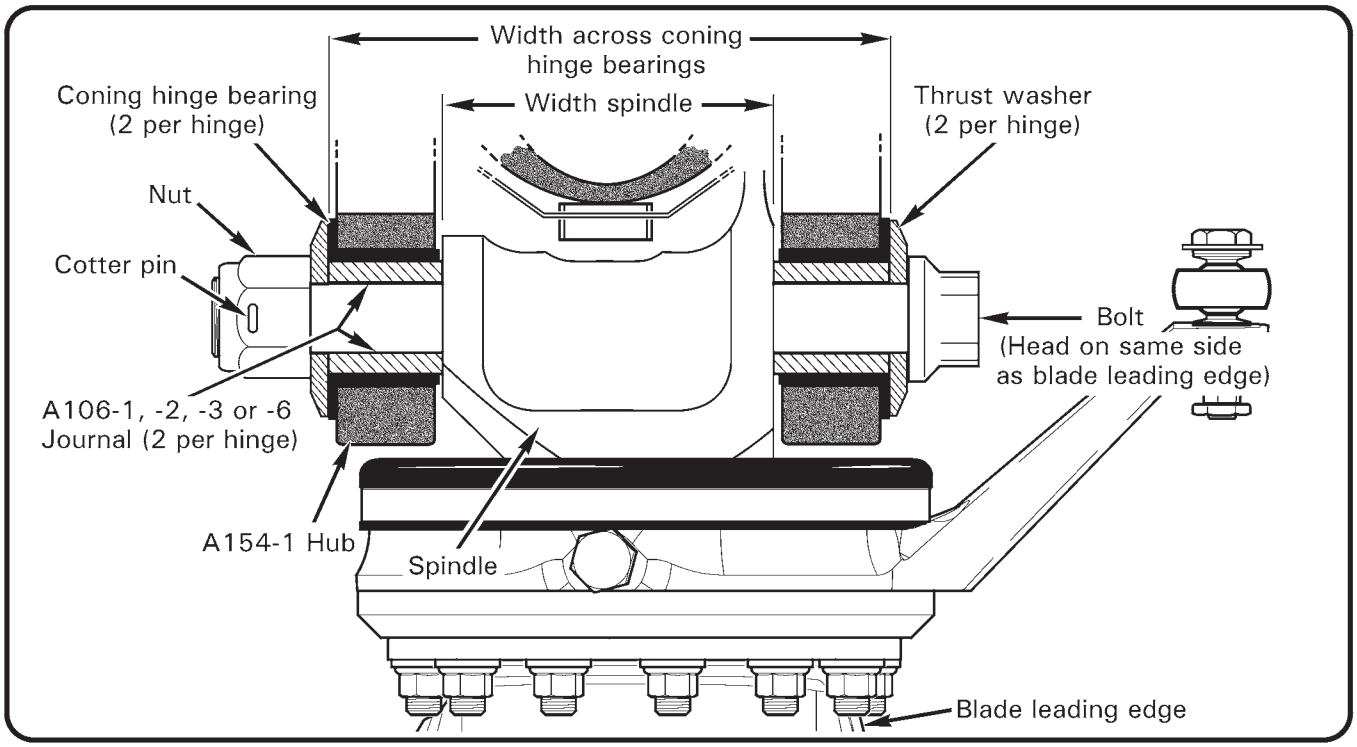

FIGURE 9-2C A154-1 HUB CONING HINGE (BLADE INSTALLATION; VIEW LOOKING DOWN)

A106 Journal Lengths		
Part No.	Length	Location
A106-1	1.000 in.	Coning hinge, no shims (A154-1 Hub)
A106-2	0.995 in.	Coning hinge, no shims (A154-1 Hub)
A106-3	0.990 in.	Coning hinge, no shims (A154-1 Hub)
A106-4	1.300 in.	Teeter hinge (two, or one + A106-5 per hinge), shims
A106-5	1.260 in.	Teeter hinge (none, or one + A106-4 per hinge), shims
A106-6	1.005 in.	Coning hinge, no shims (A154-1 Hub)
A106-7	1.005 in.	Coning hinge (B370-1 Hub)

A117 Shim Sizes		
Part No.	Thickness	Location (Between thrust washer and journal)
A117-5	0.012 in.	Teeter hinge
A117-6	0.015 in.	Teeter hinge
A117-7	0.020 in.	Teeter hinge
A117-8	0.025 in.	Teeter hinge
A117-48	0.012 in.	Coning hinge (B370-1 Hub)
A117-49	0.015 in.	Coning hinge (B370-1 Hub)
A117-50	0.020 in.	Coning hinge (B370-1 Hub)
A117-51	0.025 in.	Coning hinge (B370-1 Hub)

TABLE 9-1 A106 JOURNAL LENGTHS AND A117 SHIM SIZES

9.123 Main Rotor Hub Journal and Shim Calculations

Refer to Table 9-1 and Figures 9-2A, 9-2B, and 9-2C.

A. Teeter Hinge Calculation

1. Measure main rotor hub width across the teeter hinge bearing faces: _____ in.
2. Subtract measured width of A251 driveshaft at teeter hinge bolt hole: – _____ in.

   Calculated empty space: = _____ in.
3. Assemble thrust washer, one A117-7 shim (0.020 inch), and one A106-4 journal (1.300 inches) under the teeter bolt head and insert bolt thru hub and drive shaft.

   Subtract combined measured thickness of A117-7 shim & A106-4 journal: – _____ in.

   Difference: = _____ in.
4. Subtract measured length of nut-side A106-4 or A106-5 journal: – _____ in.

   Difference: = _____ in.

> **CAUTION**
>
> Initial teeter hinge hardware stack-up must be adjusted to 0.005/0.008 inch greater than calculated empty space. A smaller initial stack-up could damage thrust washers and hub bearings during installation.

5. To accommodate dimensional change due to clamping force, add: + 0.005/0.008 in.

   Initial A117 shim stack between nut-side journal & thrust washer: = _____ / _____ in.

> NOTE
>
> Use as many different size A117 shims as possible to facilitate head shifting during balancing.

6. Refer to § 9.124. Adjust shim stack as required to meet teeter hinge friction requirement (less than 15 ft-lb).

9.123 Main Rotor Hub Journal and Shim Calculations (continued)

B. Coning Hinge Calculation

B370-1 Hub:

1. Measure main rotor hub width across the coning hinge bearing faces: _____ in.
2. Subtract measured width of blade spindle at teeter hinge bolt hole: – _____ in.

   Calculated empty space: = in.
3. Subtract combined measured length of two A106-7 journals: – _____ in.

   Difference: = _____ in.

> **CAUTION**
>
> Initial teeter hinge hardware stack-up must be adjusted to 0.003/0.006 inch greater than calculated empty space. A smaller initial stack-up could damage thrust washers and hub bearings during installation.

5. To accommodate dimensional change due to clamping force, add: + 0.003/0.006 in.

   Initial A117 shim stack between nut-side journal & thrust washer: = _____/_____ in.
6. Adjust shim stack combination as required to meet coning hinge axial gap requirement per Figure 9-3A and to maintain teeter friction requirement as follows: It must be possible to manually cone each blade without teetering the hub when blades are held up off the droop stops and lifted at tip.

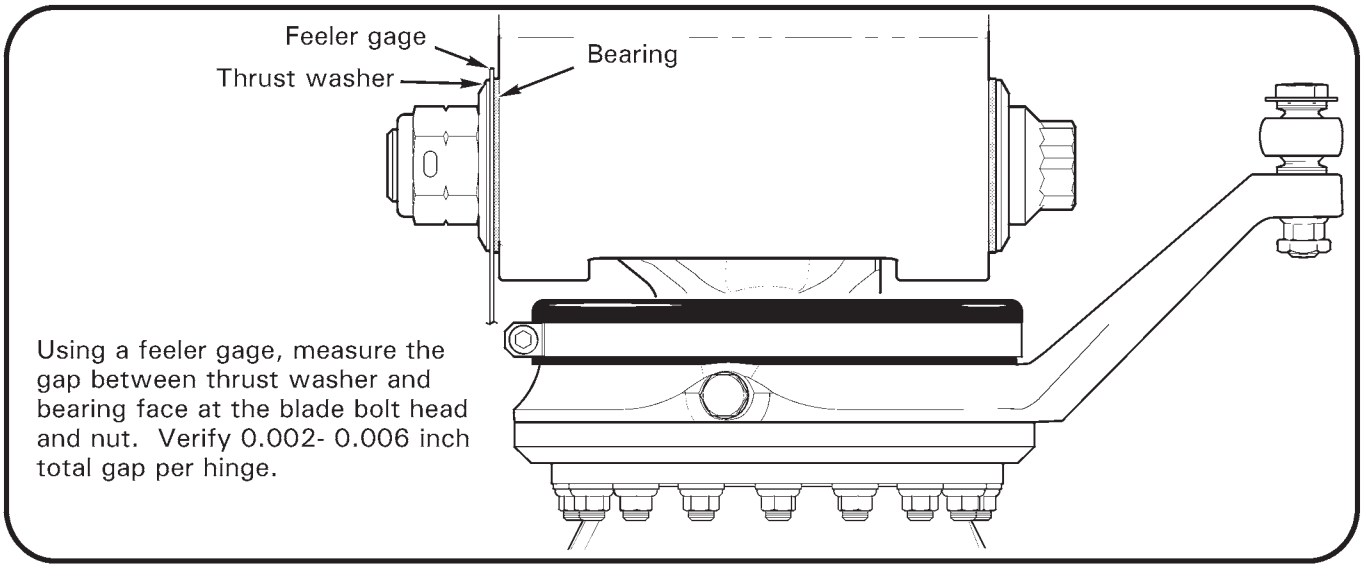

FIGURE 9-3A MEASURING CONING HINGE AXIAL GAP

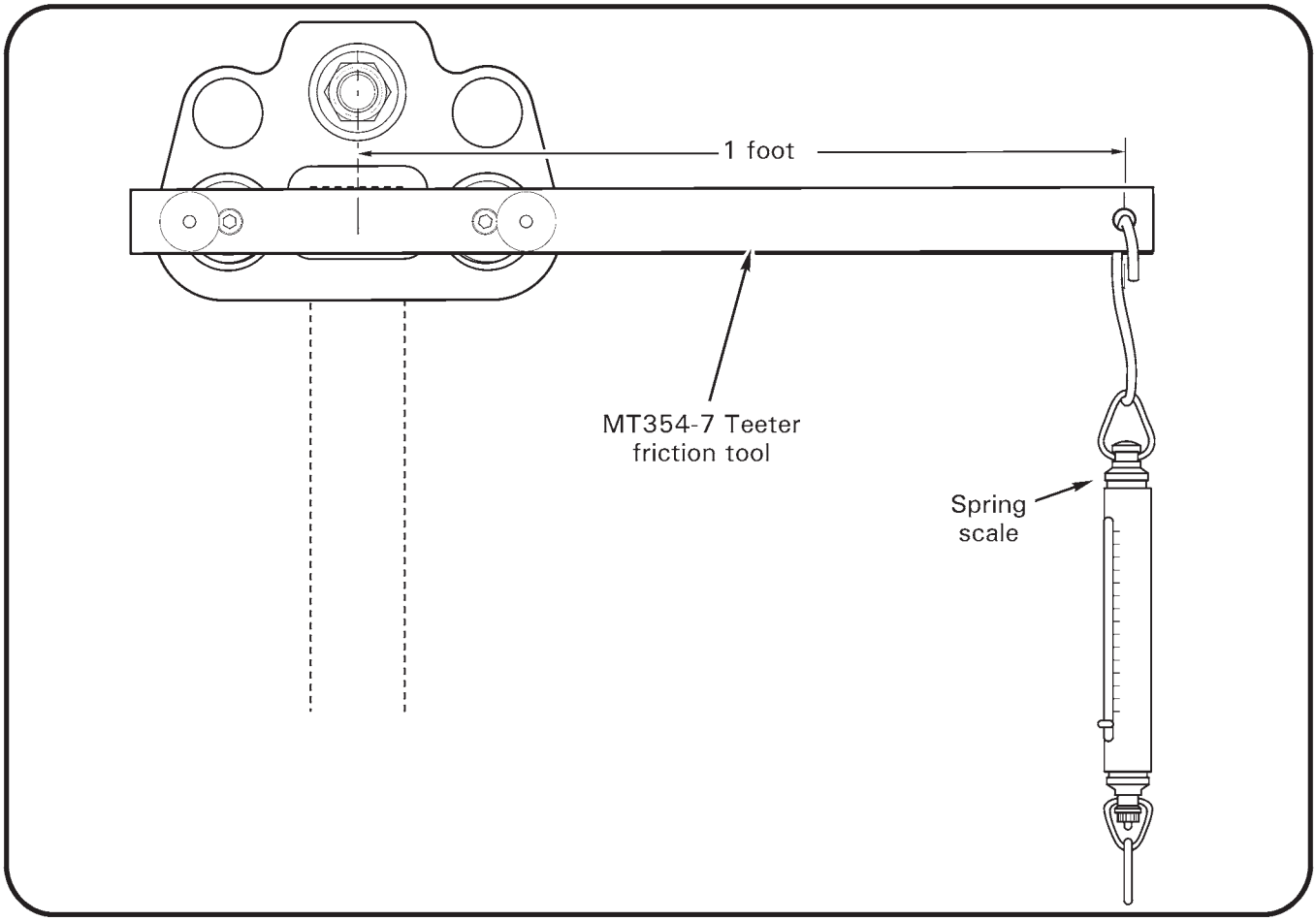

FIGURE 9-3B MEASURING TEETER HINGE FRICTION

9.123 Main Rotor Hub Journal and Shim Calculations (continued)

B. Coning Hinge Calculation (continued)

A154-1 Hub:

1. Measure main rotor hub width across the coning hinge bearing faces: _____ in.
2. Subtract measured width of blade spindle at coning hinge bolt hole: – _____ in.

Calculated empty space: = _____ in.

> **CAUTION**
>
> Initial coning hinge hardware stack-up must be adjusted to 0.003/0.006 inch greater than calculated empty space. A smaller initial stack-up could damage thrust washers and hub bearings during installation.

3. To accommodate dimensional change due to clamping force, add: + 0.003/0.006 in.

Sum: = _____ / _____ in.

4. Select a combination of A106-1, -2, -3, or -6 journals whose combined measured lengths equal Sum. The same journal dash number must be used under the head of both coning hinge bolts to maintain symmetry.
5. Adjust journal combination as required to meet coning hinge axial gap requirement per Figure 9-3A and to maintain teeter friction requirement as follows: It must be possible to manually cone each blade without teetering the hub when blades are held up off the droop stops and lifted at tip.

9.124 Adjusting Hinge Friction

A. Teeter Hinge Friction Adjustment

1. Remove main rotor blades per § 9.111.
2. Refer to Figure 9-2A and Table 9-1. Remove cotter pin, nut, thrust washer, and nut-side A117 shims. Adjust teeter hinge friction by changing nut-side shim stack thickness in small increments; reducing shim stack thickness increases friction, increasing shim stack thickness reduces friction. Install shims, thrust washer, and nut.
3. Refer to Figure 9-3B. While torquing teeter hinge bolt per § 1.330, check teeter hinge friction frequently. To check friction, install MT354 teeter friction tool into coning hinge bearings on one side of main rotor hub and measure moving force (not breakaway force) required to teeter main rotor hub with a spring scale. Teeter friction must be less than 15 ft-lb.
4. Install a new bolt and nut per § 9.122.

9.124 Adjusting Hinge Friction (continued)

B. Coning Hinge Friction Adjustment

1. Refer to Figure 9-2B and Table 9-1. Remove cotter pin, nut, thrust washer, and cone blade to remove nut-side journal.

   a. B370-1 Hub: Adjust coning hinge friction by changing trailing-edge shim stack thickness in small increments; reducing shim stack thickness increases friction, increasing shim stack thickness reduces friction. Coning hinge friction is zero when there is a measurable axial gap per Figure 9-3A. Install shims, thrust washer, and nut.

   b. A154-1 Hub: Adjust coning hinge friction by changing trailing-edge journal length in small increments; using a shorter journal increases friction, using a longer journal reduces friction. Coning hinge friction is zero when there is a measurable axial gap per Figure 9-3A. Install journal, thrust washer, and nut.

2. Install a new bolt and nut per § 9.122, steps 5 thru 7. Repeat steps for opposite blade.

3. Check coning hinge friction by lifting blades until spindle tusks clear droop stops. Hold one blade level and cone opposite blade. Rotor hub must not teeter as blade is coned. Repeat check on opposite blade.

4. Using a feeler gage, measure gap between thrust washers and bearing faces at coning hinge bolt head and nut. Verify 0.002-0.006 inch total gap per hinge.

5. Drill nut and bolt per § 9.116. Install a new cotter pin wet with epoxy primer.

9.125 Shifting the Main Rotor Hub

1. Remove cotter pin, nut, thrust washer, and nut-side A117 shims.

2. Have two people cone the main rotor blades. Push out teeter hinge bolt with another bolt.

3. Move or exchange existing shims from one side of hub to the other as indicated by main rotor balance chart (refer to § 10.230).

4. Install teeter hinge bolt per § 9.122.

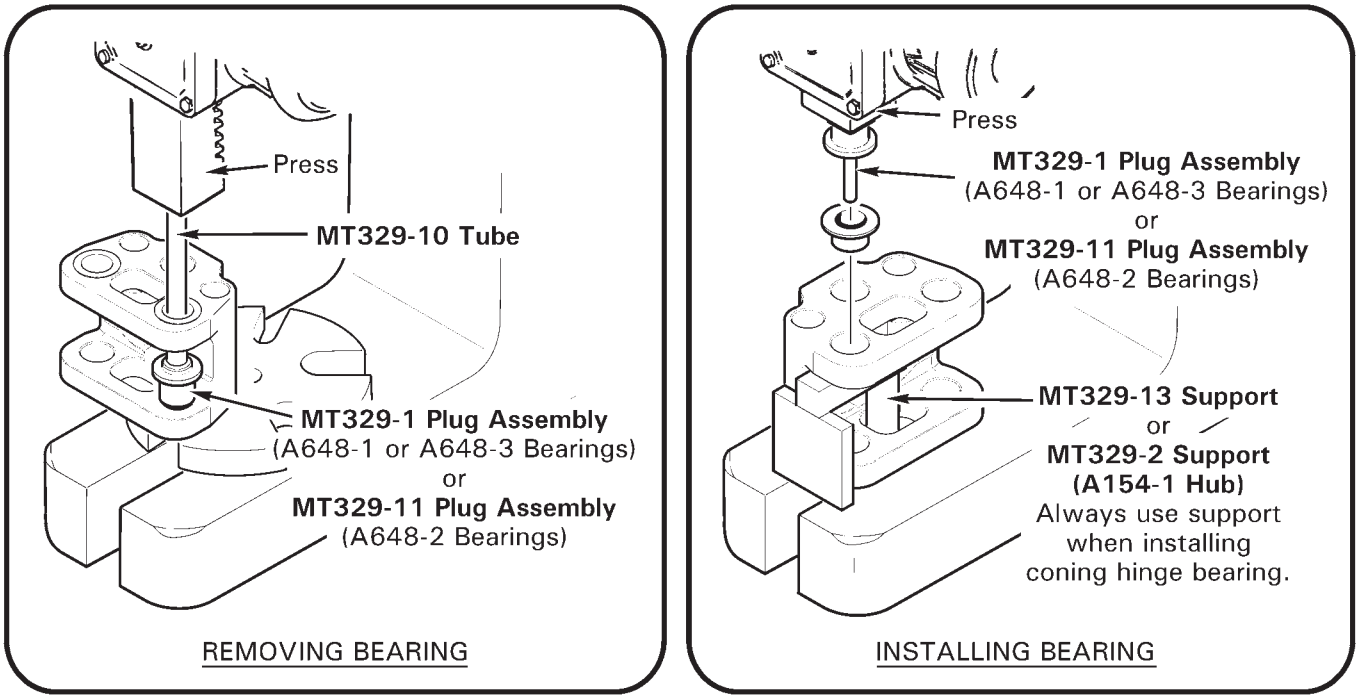

FIGURE 9-4 MAIN ROTOR HUB BEARING REPLACEMENT

9.126 Main Rotor Hub Bearing Replacement

1. Remove main rotor hub per § 9.121.

2. Refer to Figure 9-4. Verify tooling surfaces are smooth to avoid damaging hub and bearings. Press A648-1 and/or A648-3 bearing(s) from hub using MT329-1 plug assembly (Rev H or subsequent) with MT329-10 tube. Press A648-2 bearing(s) from hub using MT329-11 plug assembly with MT329-10 tube.

3. Visually inspect hub bearing bore and verify no scoring or scratches. Polish out fretting or corrosion to 0.0005 inch maximum depth (1.1870 inch maximum bore diameter, or 1.3120 inch maximum bore diameter [B370-1 hub coning hinge bearing bores]) and 0.25 inch minimum blend radius using 320-grit or finer wet-or-dry sandpaper. Fretting or corrosion that extends beyond repair limit requires hub replacement.

> NOTE
>
> Do not allow epoxy primer to contact bearing's Teflon liner.

4. Verify bearing mating surfaces are smooth and clean and apply light coat of epoxy primer (refer to § 1.400). If visible, orient coning hinge bearing's Teflon liner seam toward top of hub. While primer is wet, press in new A648-1 and/or A648-3 bearing(s) using MT329-1 plug assembly or A648-2 bearing(s) using MT329-11 plug assembly (always use MT329-13 or MT329-2 [A154-4 Hub] support when replacing coning hinge bearing) until bearing flange is completely seated against hub.

5. Using a syringe, seal between bearing's outboard flange and hub and bearing's inboard edge and hub with small fillet of epoxy primer.

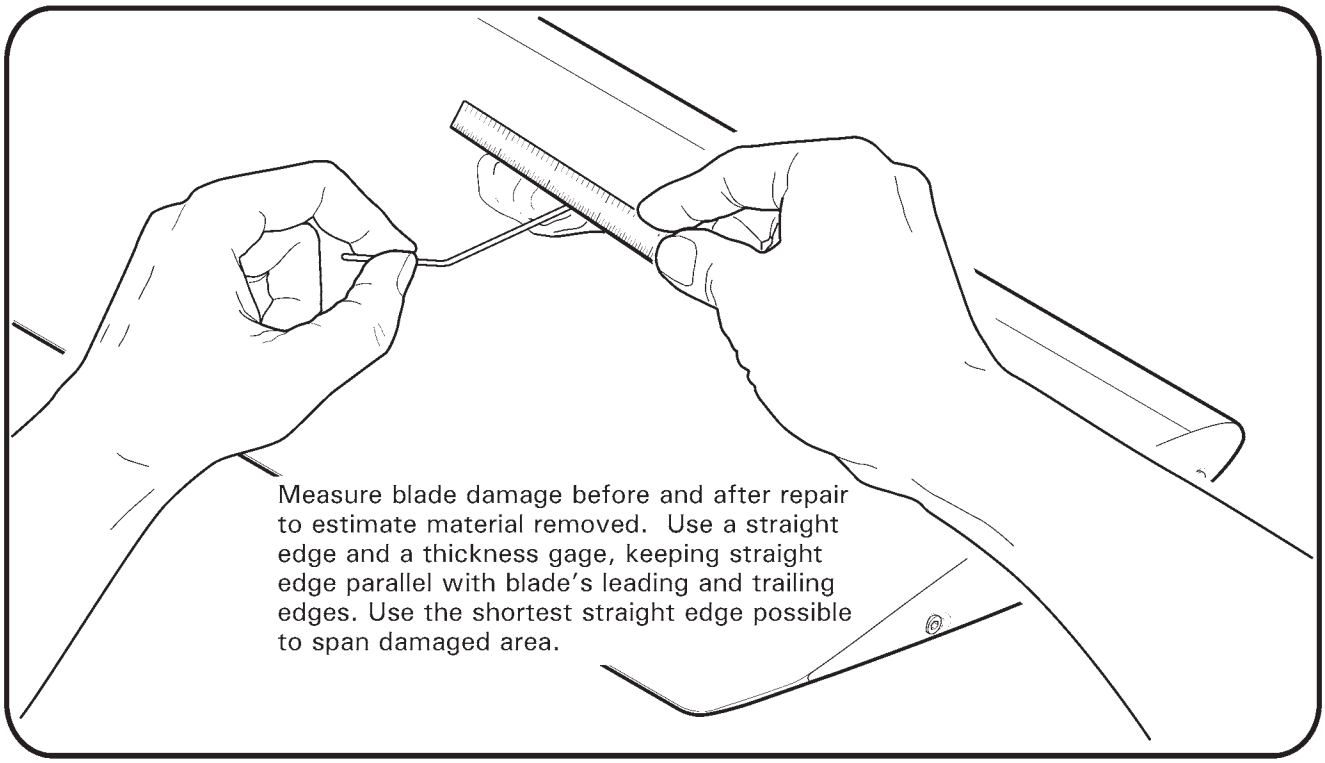

FIGURE 9-5A MEASURING MAIN ROTOR BLADE DAMAGE

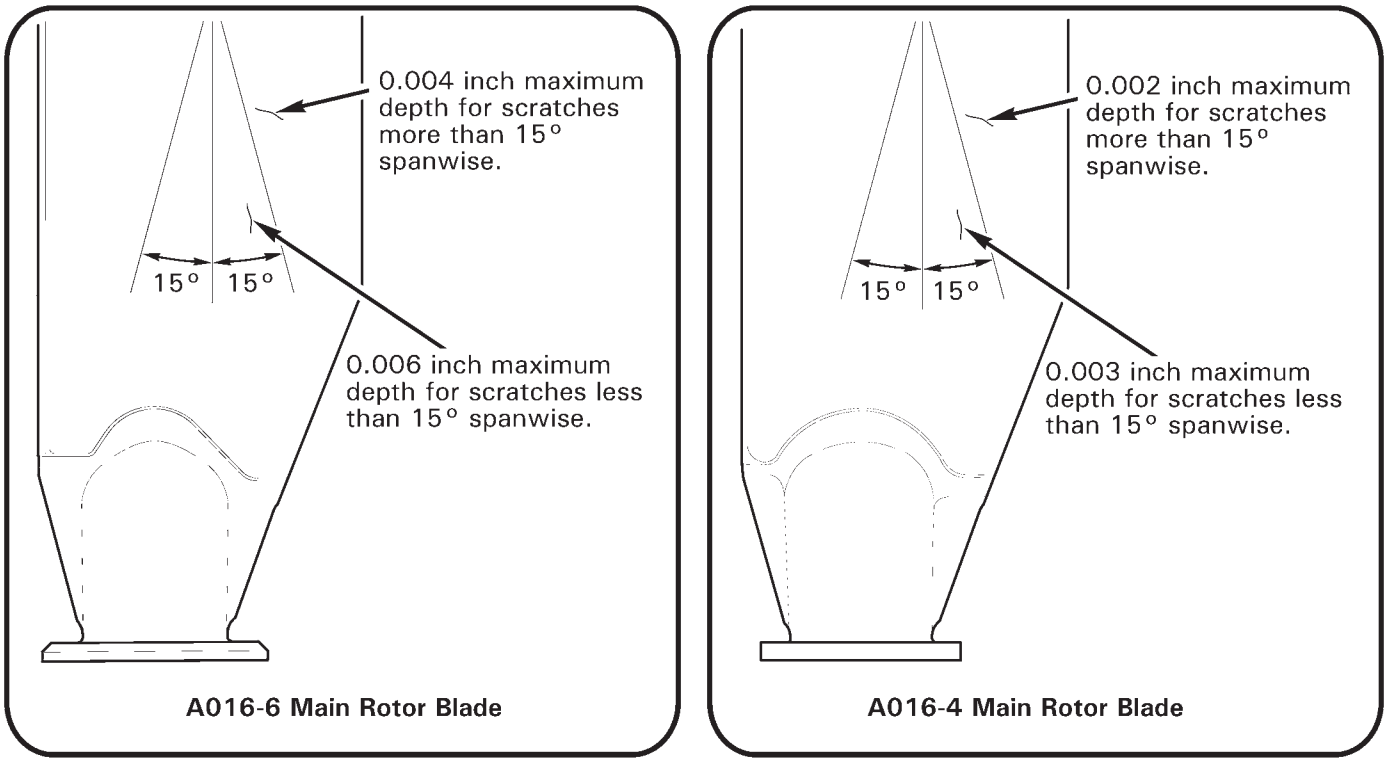

FIGURE 9-5B SCRATCH LIMITS

9.130 Inspection of Main Rotor Blades

NOTE

Main rotor blades are 14 CFR § 27.602 critical parts. Notify RHC Technical Support when voids exceeding the limits specified in the instructions below are found, providing blade serial number, helicopter serial number, time in service for the rotor blade, and location and size of the voids that exceed the limits.

NOTE

The inspection criteria in this section applies to blade damage that occurs after blade manufacturing (including shipping and handling and time in service). Damage after blade manufacturing usually exhibits paint scuffing, scratches, or freshly-exposed metal in the form of scratches in the finish. If a blade manufacturing irregularity is suspected, contact RHC Technical Support.

CAUTION

A blade may be repaired more than one time. However, in no case can more than the maximum material be removed or the maximum dent depth be exceeded in any one location.

A. Measuring Damage

1. Refer to Figure 9-5A. Measure blade damage using a straight edge and a thickness gage. Keep straight edge parallel with the leading and trailing edges.
2. If blades are installed on the helicopter, measure damage using the shortest straight edge possible to span damaged area. Using a straight edge of excessive length will cause a false reading due to natural droop of the blade.

B. Measuring Material Removed After Repair

1. Use calipers or micrometers and compare measurements before and after repair to estimate amount of material removed.
2. Use a straight edge and thickness gage to measure repaired areas less than 2 inches across in the blade skins and spar.

9.131 Scratches and Corrosion on Blade Skins and Doublers

1. Refer to Figure 9-5B. Damage may not exceed the following limits after rework:

   A016-6 Blades:

   a. 0.004 inch maximum depth for scratches more than 15° from spanwise axis.
   b. 0.006 inch maximum depth for scratches less than 15° from spanwise axis.

   A016-4 Blades:

   a. 0.002 inch maximum depth for scratches more than 15° spanwise.
   b. 0.003 inch maximum depth for scratches less than 15° spanwise.

2. Refer to § 9.140 for repair procedures for damage within limits. Polish out scratches and corrosion greater than 0.0005 inch deep using a 0.10 inch blend radius.

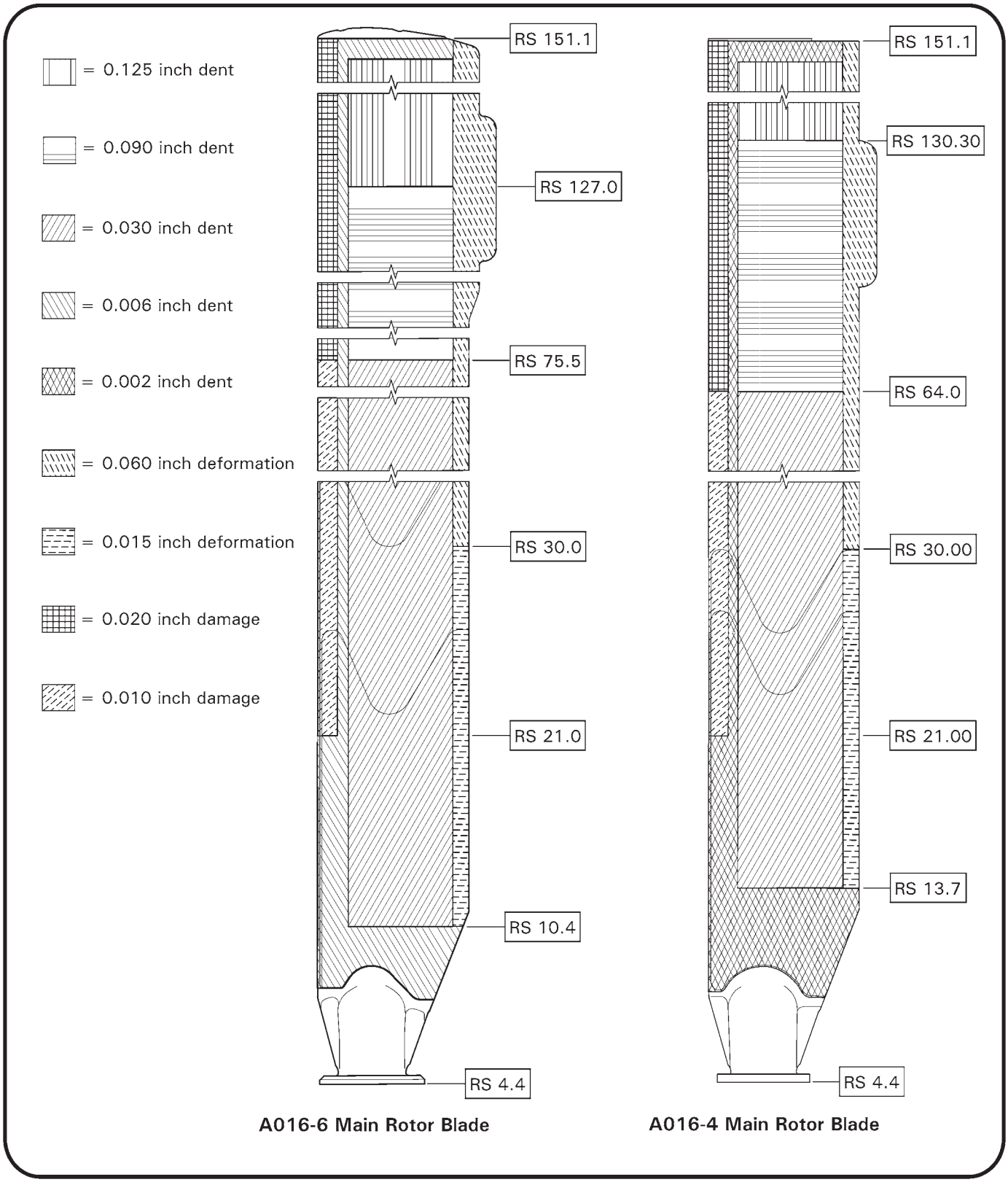

FIGURE 9-6 DENTS AND LOCAL DEFORMATIONS

9.132 Dents and Local Deformations

CAUTION

Tap-test dented areas in honeycomb using an AN970-4 washer or 1965-or-later U.S. quarter dollar coin in good condition. If any voids are found associated with dents, contact RHC Technical Support.

CAUTION

Do not repair any dent that has a sharp cut or break in the skin; dent must have 0.060 inch minimum bottom radius. If necessary, locally penetrant inspect, keeping penetrant materials away from bond joints.

1. Refer to Figure 9-6. Damage may not exceed the following limits:

   a. Honeycomb:

      A016-6 Blades:

      i. 0.020 inch maximum bulge on opposite side of blade, opposite dent.
      ii. 0.125 inch maximum depth dent between RS 127.0 and RS 151.1.
      iii. 0.090 inch maximum depth dent between RS 75.5 and RS 127.0.
      iv. 0.030 inch maximum depth dent between RS 10.4 and RS 75.5.

      A016-4 Blades:

      i. 0.020 inch maximum bulge on opposite side of blade, opposite dent.
      ii. 0.125 inch maximum depth dent between RS 130.30 and RS 151.1.
      iii. 0.090 inch maximum depth dent between RS 64.00 and RS 130.30.
      iv. 0.030 inch maximum depth dent between RS 13.7 and RS 64.00.

   b. Leading edge of doublers:

      A016-6 Blades: 0.010 inch maximum depth dent.

   c. Supported bond joints:

      A016-6 Blades: 0.006 inch maximum depth dent.

      A016-4 Blades: 0.002 inch maximum depth dent.

   d. Local deformations:

      A016-6 Blades: Within 0.75 inch forward of trailing edge:

      i. 0.060 inch deformation between RS 30.0 and RS 151.0.
      ii. 0.015 inch deformation between RS 10.4 and RS 30.0.

      A016-4 Blades: Within 0.75 inch forward of trailing edge:

      i. 0.060 inch deformation between RS 30.00 and RS 151.00.
      ii. 0.015 inch deformation between RS 13.70 and RS 30.00.

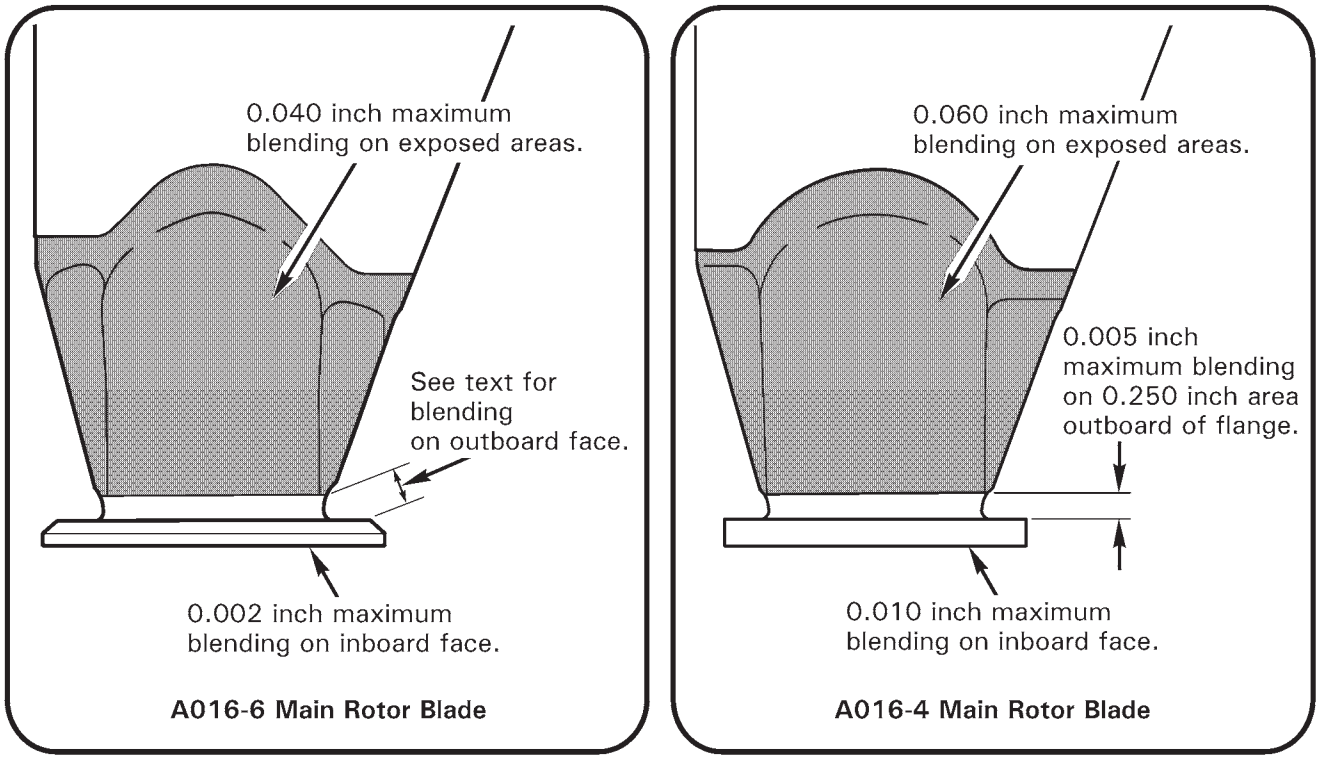

FIGURE 9-7 ROOT FITTING BLEND LIMITS

9.132 Dents and Local Deformations (continued)

1. e. Spar: Refer to step 2. Blend damaged areas by hand with a minimum 1.0 inch blend radius. Blending is not allowed within 0.010 inch of spar groove leading edge.

A016-6 Blades:

i. 0.020 inch maximum depth damage between RS 75.5 and RS 151.0.
ii. 0.010 inch maximum depth damage between RS 21.0 and RS 75.5.

A016-4 Blades:

i. 0.020 inch maximum depth damage between RS 64.0 and RS 151.0.
ii. 0.010 inch maximum depth damage between RS 21.00 and RS 64.00.

2. Refer to § 9.140 for repair procedures for damage within limits. Smooth, round bottom dents with 0.060 inch minimum radius may be filled and faired to an aerodynamic shape.

9.133 Root Fitting Damage

1. Refer to Figure 9-7. Damage may not exceed the following limits:

   A016-6 Blades:

   Refer to step 2. Blend damaged areas by hand with a minimum 0.030 inch blend radius.

   a. 0.002 inch maximum depth blending on flange inboard face.
   b. 0.005 inch maximum depth, 0.250 inch maximum diameter blending on flange outboard machined face (3 blends maximum). 0.10 inch minimum distance from hole edges.
   c. 0.040 inch maximum depth blending on exposed areas of root fitting.

   A016-4 Blades:

   Refer to step 2. Blend damaged areas by hand with a minimum 0.10 inch blend radius.

   i. 0.010 inch maximum depth blending on flange inboard face.
   ii. 0.005 inch maximum depth blending on 0.250 inch area outboard of flange.
   iii. 0.060 inch maximum depth blending on exposed areas of root fitting.

2. Refer to § 9.140 for repair procedures for damage within limits.

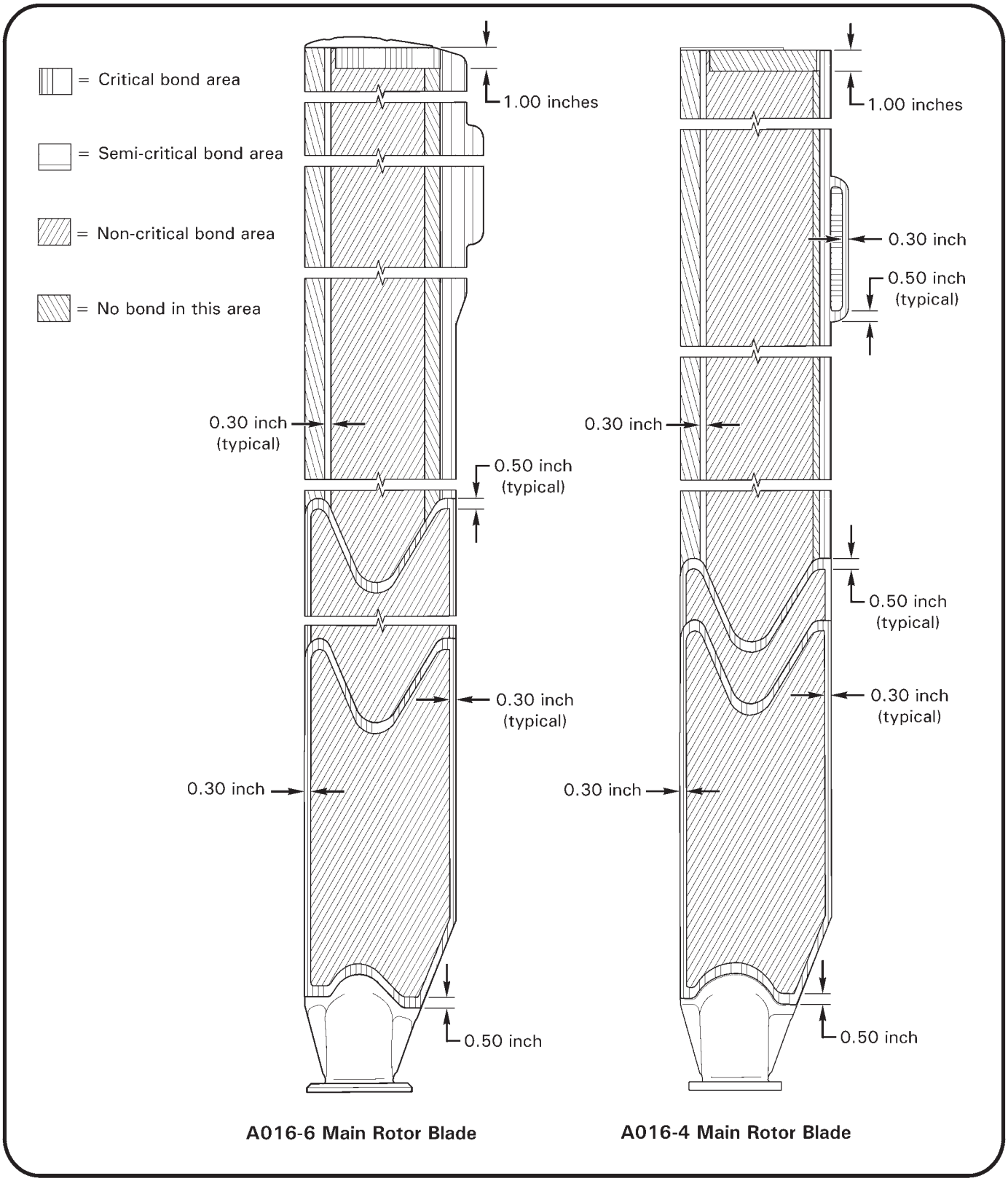

FIGURE 9-8 BOND AREAS

9.134 Voids

CAUTION

Tap-test voids and debonds in blades using an AN970-4 washer or 1965 or later U.S. quarter dollar coin in good condition.

CAUTION

Voids or debonds in doublers are not field repairable. If voids or debonds are detected in doublers which exceed limits, contact RHC Technical Support.

A. Critical Bond Areas

Refer to Figure 9-8. Critical bond areas are areas less than 0.50 inch spanwise and less than 0.30 inch chordwise from the edge of any structural bond joint.

Bond areas not defined as semi-critical or non-critical are considered critical.

Voids separated by less than 0.25 inch are considered continuous.

1. Damage may not exceed the following limits:

   a. 0.10 square inch maximum void.
   b. Area must be at least 90% bonded.

B. Semi-Critical Bond Areas

A016-6 Blades:

A016-6 Blades do not have semi-critical bond areas.

A016-4 Blades:

Refer to Figure 9-8. Semi-critical bond areas are areas more than 0.50 inch spanwise or more than 0.30 inch chordwise from the edge of the trim tab.

Voids separated by less than 0.25 inch are considered continuous.

1. Damage may not exceed the following limits:

   a. 0.80 inch diameter circle maximum void.
   b. 0.90 square inch maximum void.
   c. 0.10 square inch maximum of a void extending into a critical bond area.
   d. Area must be at least 80% bonded.

C. Non-Critical Bond Areas

Refer to Figure 9-8. Non-critical bond areas are areas more than 0.50 inch spanwise or more than 0.30 inch chordwise from B440 cap (A016-4 blades), from doubler edges, and from bonded areas between skin and honeycomb.

9.134 Voids (continued)

C. Non-Critical Bond Areas (continued)

A016-6 Blades:

1. Voids in doubler bond joints separated by less than 0.25 inch are considered continuous. Damage in doubler bond joints may not exceed the following limits:

   a. Area must be at least 80% bonded.
   b. 5.0 square inches, 1.0 inch chordwise, & 6.0 inches spanwise maximum void.
   c. 0.10 square inch maximum of a void extending into a critical bond area.
   d. Voids are permissible within 0.30 inch of doubler leading edge where it wraps around spar and root fitting.

2. Voids in honeycomb bond joints separated by less than 0.50 inch spanwise or 1.0 inch chordwise are considered continuous. Damage in honeycomb bond joints may not exceed the following limits:

   a. Area must be at least 80% bonded.
   b. 8.0 square inches, 1.0 inches chordwise, & 20.0 inches spanwise maximum void inboard of RS 92.0.
   c. 14.0 square inches, 2.0 inches chordwise, & 20.0 inches spanwise maximum void outboard of RS 92.0.

A016-4 Blades:

1. Voids in A934 doubler bond joints may not exceed the following limits:

   a. 5.0 square inches, 1.10 inches chordwise & 6.0 spanwise maximum void.
   b. 0.10 square inch maximum void extending into a critical bond area.
   c. 2.0 inches maximum void from outboard tips (refer to R22 SL-55).

2. Voids in honeycomb bond joints inboard of RS 106.0 may not exceed 8.00 square inches, 1.00 inches chordwise, & 20.00 inches spanwise maximum.

3. Voids in honeycomb bond joints outboard of RS 106.0 may not exceed 14.00 square inches, 2.00 inches chordwise, & 20.00 inches spanwise maximum.

4. Voids in honeycomb bond joints between RS 120.0 and RS 133.5, and between RS 150.0 and 166.0, must be at least 1.0 inch forward of honeycomb trailing edge and the skin over void may not move when trim tabs are flexed.

5. Voids in A934 doubler bond joints separated by less than 0.25 inch, less than 0.50 inch spanwise, or less than 1.0 inch chordwise are considered continuous. Area must be at least 80% bonded.

9.140 Repair of Main Rotor Blades

Refer to § 1.400 for approved materials.

CAUTION

Do NOT use power tools or chemical paint strippers to repair main rotor blades.

1. Measure damage per § 9.130.

2. Remove damage at trailing edges, trim tab edges, tip cap, and/or tip corner by trimming per § 9.141 as required.

3. Polish out damage using 220 grit or finer wet-or-dry aluminum-oxide or silicon-carbide abrasive paper, and finish with 320 grit or finer wet-or-dry abrasive paper. A fine-toothed file may be used along the spar and trailing edge, provided the area is finished with 320 grit or finer wet-or-dry abrasive paper. Sand or file in spanwise direction. Remove only the material necessary to remove the damage and blend to the radius or dimension specified. Visually inspect and verify damage is removed.

4. Measure material removed per § 9.130. Verify repair does not exceed limit specified.

5. Seal or fill as required per the following:

   a. Clean area to be sealed or filled using approved solvent (refer to § 1.400).

   b. Apply epoxy primer to bond joints with pin holes or other openings. Mix primer per manufacturer's instructions. Allow a minimum of 24 hours cure time.

   c. Using 220-grit or finer wet-or-dry aluminum-oxide or silicon-carbide abrasive paper, hand-sand cured adhesive in spanwise direction to a smooth, aerodynamic finish, congruent with the blade airfoil. Do not remove metal.

   d. Hand-sand surrounding painted surface until 25% primer remains. Keep bare metal to a minimum.

6. Paint per § 9.142 as required.

7. Track and balance main rotor per § 10.230 as required.

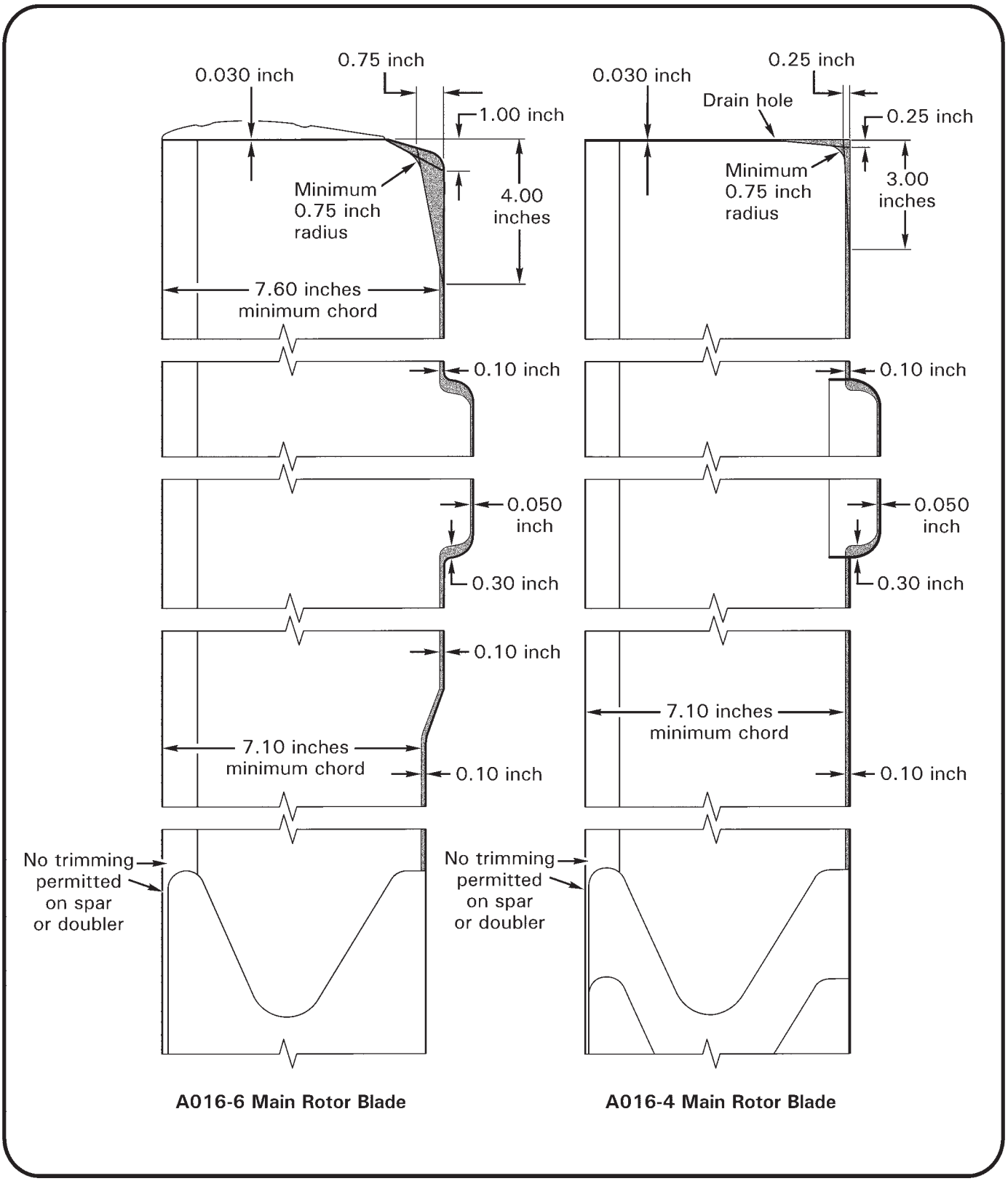

FIGURE 9-9A TRIM LIMITS

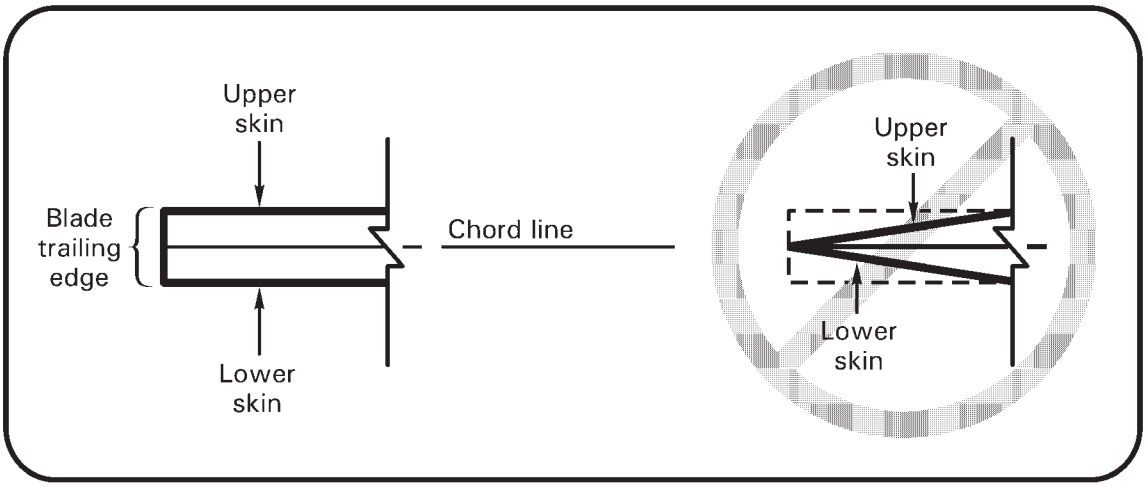

FIGURE 9-9B FILING SKIN EDGES SQUARE

9.141 Trimming

Refer to Figures 9-9A & 9-9B. Trimming may be performed on the trailing edge of main rotor blade skins and trim tab edges within limits shown. (Alternately, a trailing edge nick or notch may be blended out 1.0 inch minimum spanwise, each side of nick or notch within limits shown.) Trimming is not permitted on spar or doublers.

Tip cap and tip corner may be trimmed within limits shown.

Finish repair per § 9.140 steps 2 thru 7. File trailing edge or trim tab edges square with skins (do not file into a point). Verify minimum chord dimension.

9.142 Painting

Refer to § 1.400 for approved materials. Refer to paint manufacturer's recommendations.

CAUTION

If force-drying paint, do not exceed 175° F surface temperature on blade; monitor blade temperature.

1. Remove main rotor blade tip cover(s) as required. Clean the blade(s).
2. Feather edge of paint bordering bare metal by hand-sanding spanwise with 220-grit or finer wet-or-dry aluminum-oxide or silicon-carbide abrasive paper. Do not remove metal.
3. Mask area to prevent overspray contamination.
4. Clean bare metal to be painted with a lint-free cloth dampened with enamel cleaner.
5. Prime bare metal, including bare metal under tip cover(s) as required, with at least two coats epoxy primer. Scuff first coat of primer with 320-grit abrasive paper (or very fine Scotch-Brite), and wipe down with a lint-free cloth dampened with enamel cleaner prior to applying second coat.

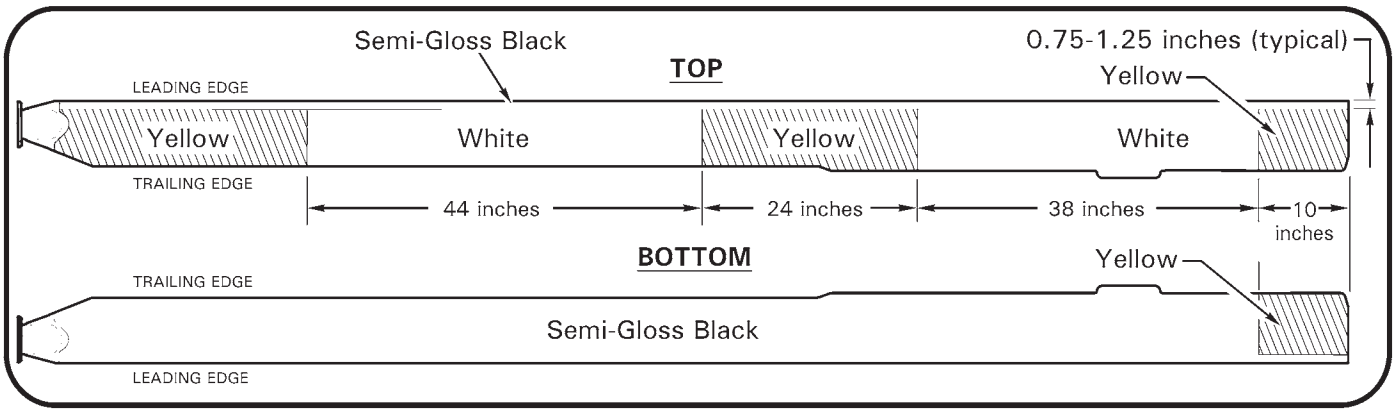

FIGURE 9-10 MAIN ROTOR BLADE PAINT SCHEME (A016-6 BLADE SHOWN)

9.142 Painting (continued)

6. Refer to Figures 9-10. Apply dark gray (root), flat black, white, and/or yellow polyurethane enamel, as required, to primed area in accordance with paint manufacturer's recommendations.

> NOTE
>
> Allow Imron paint to cure at least 72 hours before flying in erosive conditions (such as drizzle, rain, or dust).

7. Install blade tip cover(s) if removed.

8. Remove masking materials.

9.200 Tail Rotor

9.210 Tail Rotor Assembly Removal

1. Mark or tag each pitch link and corresponding blade for reinstallation. Remove hardware securing pitch links to tail rotor blades, noting hardware removed.

> NOTE
>
> Tail rotor pitch link-to-blade attach bolts may be different lengths and/or have different washers installed under nut for balancing.

2. Remove nut and A141-14 washer securing A119-1 bumper to tail rotor gearbox output shaft.

3. Remove teeter hinge bolt, then slide tail rotor assembly and bumper, and A130-1 spacers (A030-1 hub assembly only), off of shaft.

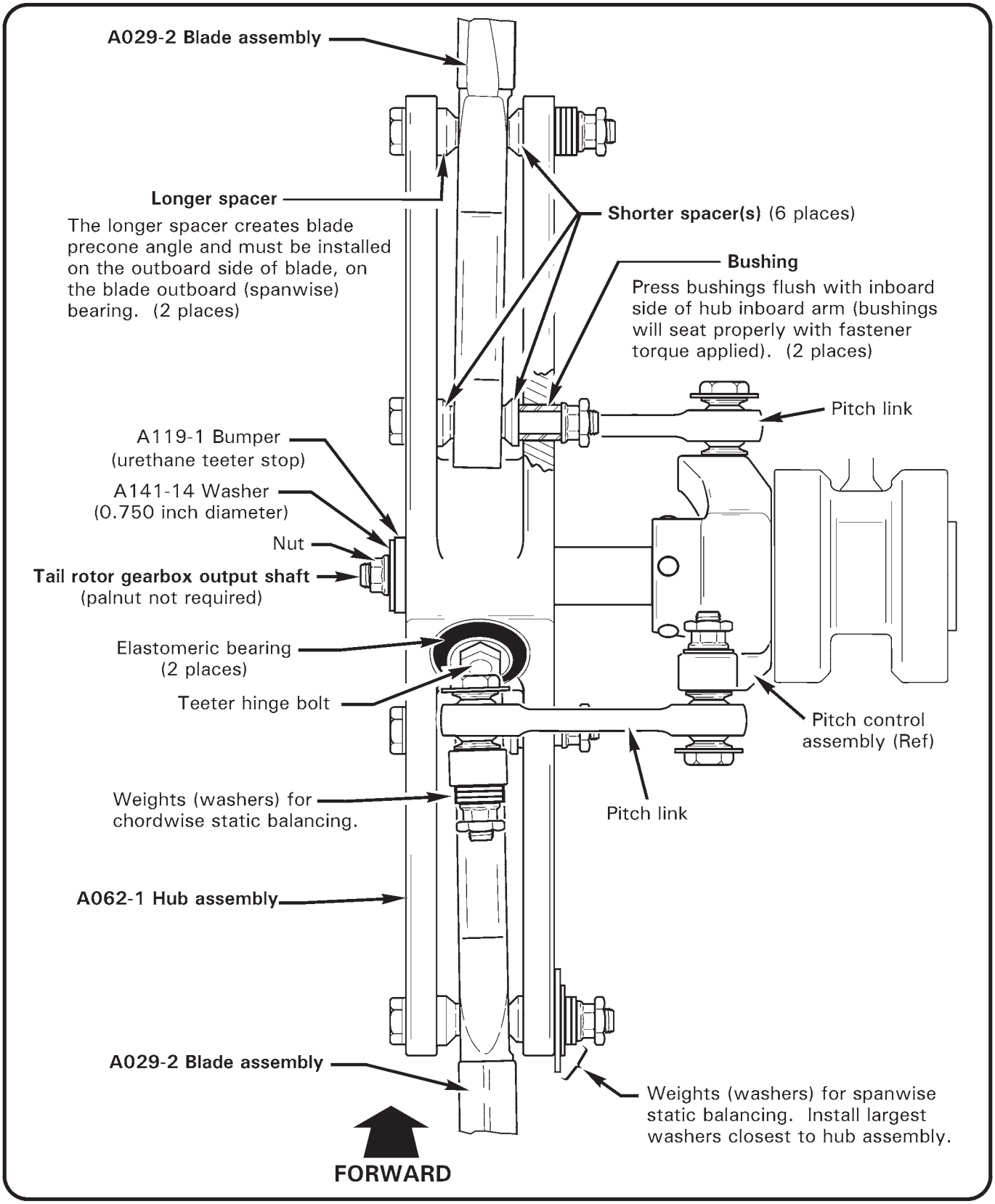

FIGURE 9-11 TAIL ROTOR ASSEMBLY INSTALLATION (A008-4 ASSEMBLY SHOWN)

9.212 Tail Rotor Installation with Spherical Teeter Bearings
(see Section 9.213 if tail rotor has elastomeric teeter bearings)

1. Before hub installation, inspect:

   a. A130-1 Spacers: Worn faces or deep indentations from bearing ball are cause for replacement.

   b. Tail rotor gearbox output shaft: Shaft worn at flats for A130-1 spacer or elongated bolt hole requires output shaft replacement. A021-1 tail rotor gearbox output shafts may be replaced by an RHC-authorized component overhaul facility. B021-1 tail rotor gearboxes must be returned to RHC for output shaft replacement.

   c. Teeter bearings in hub: If inner ball is tight, move ball in bearing to work-in and reduce stiffness.

2. Align tail rotor blades with same pitch change link from which removed.

3. Place A130-1 spacers inside hub and install hub assembly on tail rotor gearbox output shaft per Figure 9-12.

WARNING

Ensure blades are installed in proper direction of rotation, and large A137-2 spacers installed per Figure 9-11.

NOTE

Tail rotor hub teeter bearings may have to be pressed back slightly to allow installation on tail rotor gearbox output shaft. Place two small sockets inside hub against bearing outer races, insert screwdriver between sockets, and carefully spread bearings apart for reinstallation.

4. Install tail rotor teeter (delta) hinge bolt and nut. Torque nut per Section 1.330. Install palnut, torque per Section 1.320, and torque stripe.

NOTE

No washers are installed under teeter hinge nut or bolthead on hubs using spherical teeter hinge bearings.

WARNING

Failure to check tail rotor for proper installation per step 5 can result in failure of teeter hinge bolt and loss of tail rotor.

9.212 Tail Rotor Hub Installation with Spherical Teeter Bearings (cont'd)

5. After torquing teeter bolt, check tail rotor hub bearings, bolt as follows:

   a. Place a line on exposed portion of each bearing ball using a felt pen or grease pencil.

   b. Teeter tail rotor assembly while observing marked lines relative to output shaft of tail rotor gearbox.

   c. Teeter bolt, nut, bearing inner balls, and spacers must remain rigid (stationary) to output shaft when teetering tail rotor.

   d. Teeter bearing outer races are press fit in hub and must not move relative to hub.

NOTE

If bearing ball, bolthead, and/or nut are moving with hub and blade assembly, insufficient clamp-up is indicated. Possible causes and corrective action for insufficient clamp-up are:

i. Worn A130-1 spacers - replace spacers.
ii. Hub teeter bearing stiff - manually work-in bearing by moving ball.
iii. Output shaft flats worn at bolt hole - return gearbox to RHC for repair.
iv. Metal at bottom of hub bore is preventing bearing outer races seating - remove bearings, clean bore and reinstall bearings.
v. Force required to teeter tail rotor assembly not to exceed 3 lb, measured at blade tip, before first forward flight. After 6 hours of forward flight, teeter forces must not exceed 1 lb.

6. Install bumper, A141-14 washer, and nut on output shaft. Torque nut per Section 1.320, install palnut, and torque stripe.

7. Connect pitch links blades. Torque fasteners per Section 1.320 and torque stripe.

8. Dynamically balance tail rotor per Section 10.240.

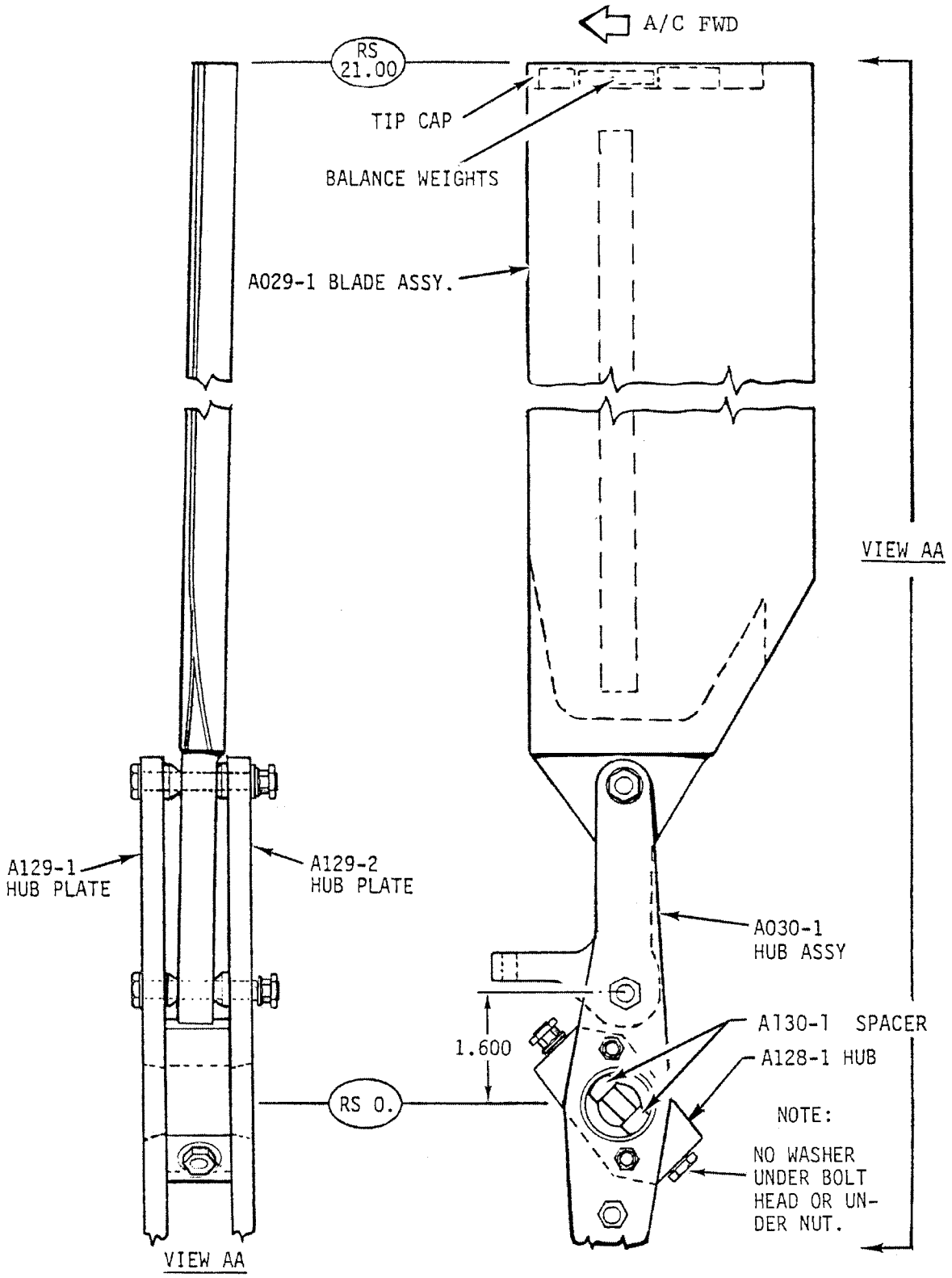

FIGURE 9-12 TAIL ROTOR ASSEMBLY (SPHERICAL TEETER BEARINGS)

9.213 Tail Rotor Installation with Elastomeric Teeter Bearings
(see Section 9.212 if tail rotor has spherical teeter bearings)

1. Align tail rotor blades with same pitch link from which removed. Install tail rotor on tail rotor gearbox output shaft, and verify counterclockwise direction of rotation (when viewed from left side of aircraft).

2. See Figure 9-11. Verify blades cone toward tail rotor gearbox.

3. Install tail rotor teeter hinge bolt, washers, and nut. Tighten nut until elastomeric bearing metal spacers contact output shaft (See Figure 9-12).

4. Connect pitch links to blades and torque fasteners per Section 1.320.

5. See Figure 10-7. With tail rotor horizontal, tape a tracking stick to tailcone at blade tip.

> NOTE
>
> A tracking stick can be made from sheet metal approximately 1 inch wide x 12 inches long with a 90 degree bend 2 inches from one end.

6. Rotate drive train at clutch shaft. Mark tracking stick where forward drain hole of each blade tip passes.

7. Reposition (teeter) tail rotor on output shaft until both blade tips pass the same point on the tracking stick ± 0.125 inch.

8. Torque teeter hinge bolt per Section 1.330. Recheck track per step 6 and adjust per step 7, if required, and retorque teeter hinge bolt.

9. When track is satisfactory, install palnut on teeter hinge bolt, torque per Section 1.330, and torque stripe per Figure 2-1.

10. Remove tracking stick.

11. Teeter tail rotor back and forth. Verify teeter hinge bolt, bearing metal spacers, washers, and nuts remain stationary when tail rotor is teetered.

> **WARNING**
>
> **Movement of teeter hinge bolt, washer(s), spacer(s), or nut(s) indicate insufficient clamp-up, which can result in loss of tail rotor.**

12. Install urethane bumper, washer, and nut. Torque nut per Section 1.330, and torque stripe per Figure 2-1.

13. Dynamically balance tail rotor per Section 10.240.

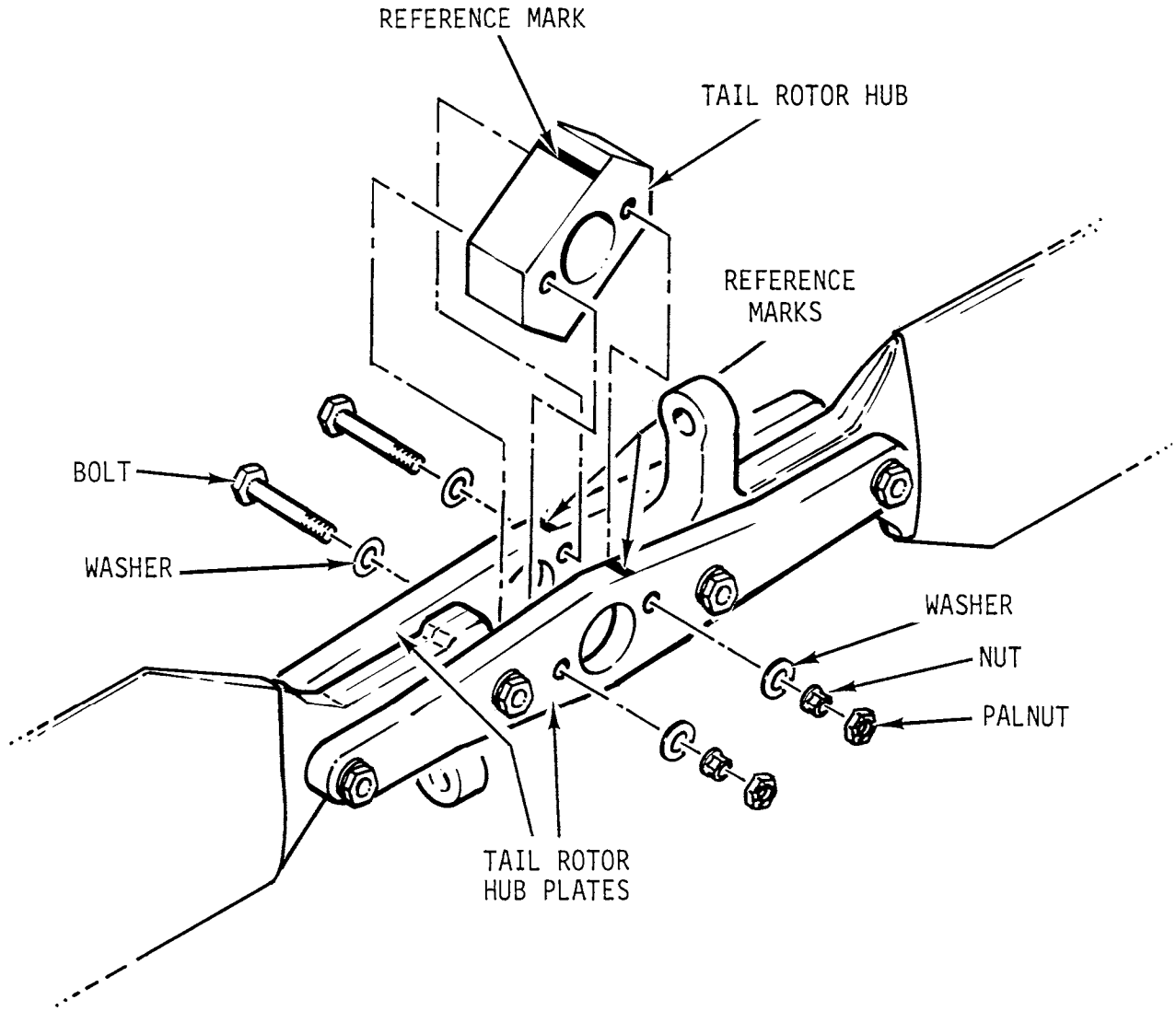

FIGURE 9-13 TAIL ROTOR HUB REMOVAL FOR BEARING REPLACEMENT

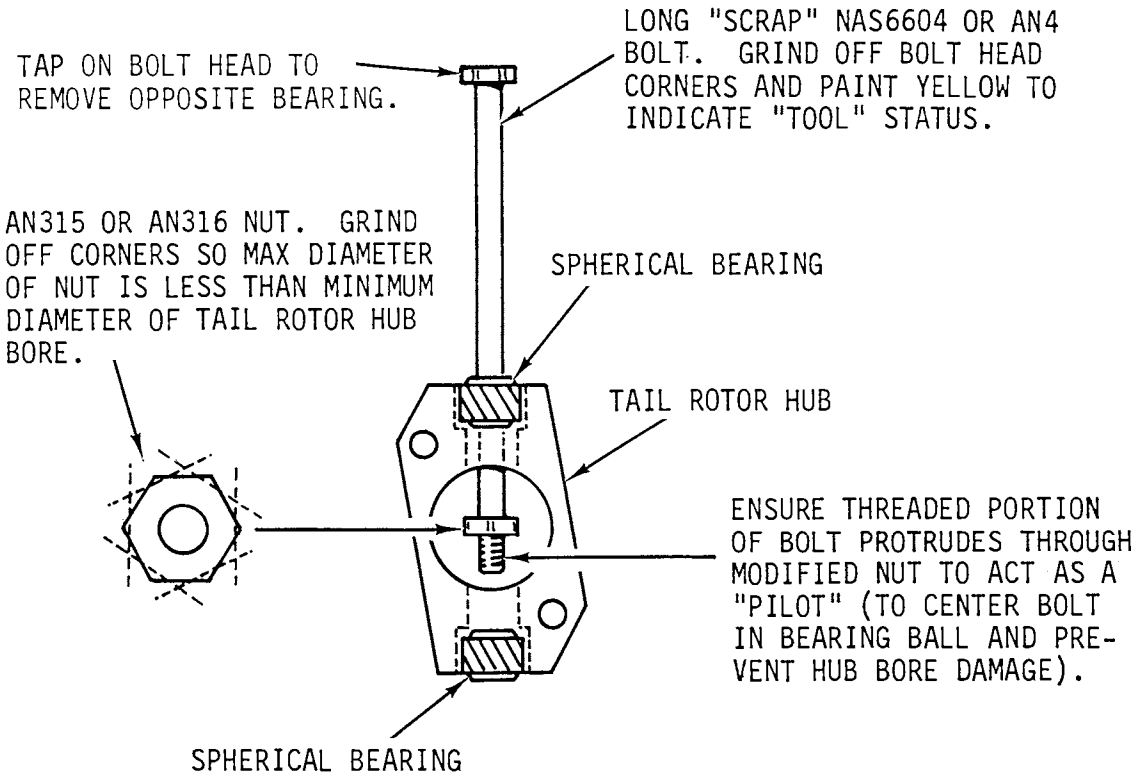

FIGURE 9-13A TAIL ROTOR HUB SPHERICAL BEARING REMOVAL

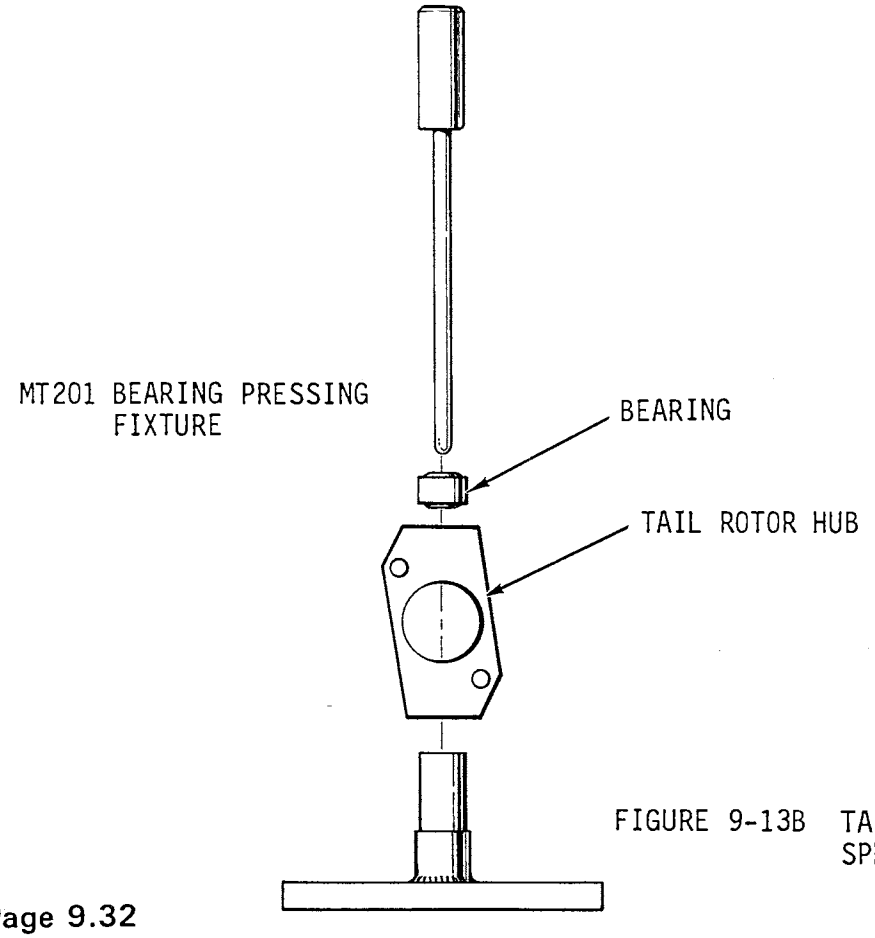

FIGURE 9-13B TAIL ROTOR HUB SPHERICAL BEARING REPLACEMENT

9.214 Tail Rotor Hub Spherical Bearing Replacement

NOTE

Some early-model tail rotors have one hub bearing swaged into hub. This bearing is nonreplacable and, if worn, hub assembly must be replaced.

1. Remove tail rotor per Section 9.210.
2. Mark hub per Figure 9-13.
3. Loosen four blade retaining bolts. Remove two center bolts securing hub between hub plates and remove hub (see Figure 9-13).
4. See Figure 9-13A. Press out worn bearing(s).
5. Clean hub bore, removing old primer or metal shavings which might prevent bearings from seating at bottom of bores.

CAUTION

Bearings are a slight press fit in hub bores. Inspect bores for fretting. If fretting is found, tail rotor hub assembly is UNAIRWORTHY.

6. See Figure 9-13B. Using special tool MT201, install bearings into hub as follows:

NOTE

Hub may be heated to 170°F maximum to ease bearing insertion and help prevent installation damage.

Apply Section 1.450-approved primer to original primed bore. Bearing is to be installed to bottom of hub bore. Apply primer or A257-7 lubricant to remaining bore and install bearing flush with top of hub. If bearing is installed too far, spacers and hub will not fit over gearbox output shaft.

NOTE

Install tail rotor without delay if using primer in both bearing bores.

7. Reinstall hub between hub plates per reference mark (see Figure 9-13). Torque two center hub and four blade retaining bolts per Section 1.320, install palnuts, and torque stripe.
8. Install tail rotor per Section 9.212.

9.215 Tail Rotor Hub Elastomeric Bearing Replacement

1. Remove tail rotor per Section 9.210.
2. Remove four blade retaining bolts and remove blades.
3. See Figure 9-13C. Using special tool MT556, press out worn bearing.
4. Clean hub bore, removing old primer or metal shavings which might prevent bearing from seating at bottom of bore.

CAUTION

Bearings are a slight press fit in hub bores. Inspect bores for fretting. If fretting is found, tail rotor hub assembly is UNAIRWORTHY.

5. Coat bottom of bearing bore with Section 1.450-approved primer. While primer is still wet, press bearing fully into hub using special tool MT556 per Figure 9-13D.
6. Repeat steps 1 thru 5 to replace opposite bearing, if required.
7. Seal between circumference of each bearing and hub with primer as required in two places.
8. Assemble blades to hub. Verify counterclockwise direction of rotation. Verify correct orientation of bolts and correct location/orientation of A137-1 & A137-2 spacers per Figure 9-11. Torque bolts per Section 1.320, install palnuts, and torque stripe.
9. Install tail rotor per Section 9.213.

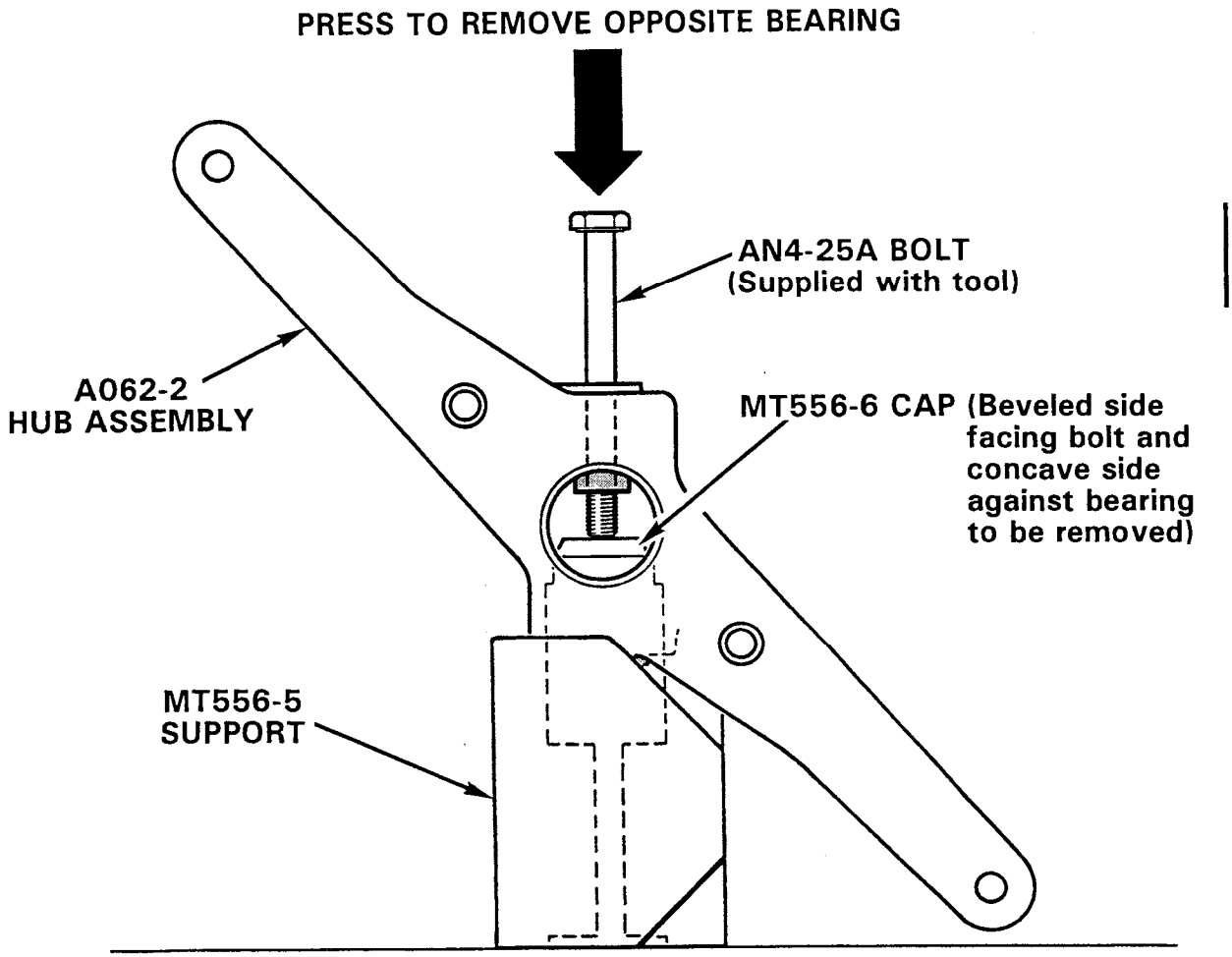

FIGURE 9-13C ELASTOMERIC BEARING REMOVAL

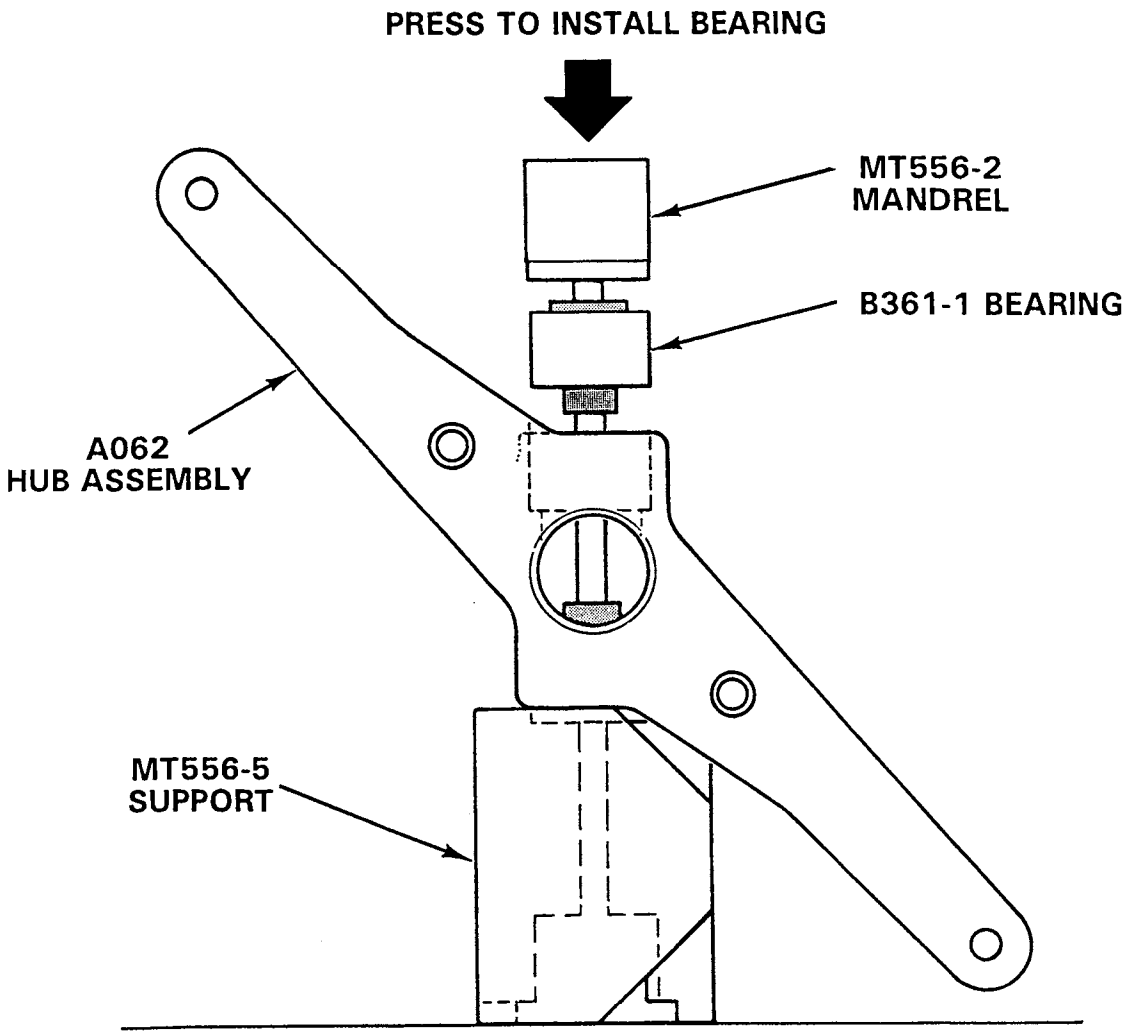

FIGURE 9-13D ELASTOMERIC BEARING INSTALLATION

9.220 Inspection and Repair of Tail Rotor Blades

This procedure outlines the inspection and repair limits for tail rotor blades. Repairs are limited to blending out mechanical scratches, dents, nicks, removing corrosion and refinishing the blades.

WARNING

Any damaged tail rotor blade that cannot be repaired within the limits of this section must be declared NON-AIRWORTHY and be removed from service immediately.

Inspection:

a) Scratches and Corrosion: Blade skins may be polished out with a .10 inch blend radius within the following limits:

1. Outboard of 6 inches from the blade tip. The maximum depth allowed is .008 inch.

2. Inboard of 6 inches from the blade tip. The maximum depth is .004 inch for any corrosion or scratches running in a direction more than 15° from the spanwise direction. The maximum depth less than 15° is .006 inch.

b) Dents on Skins (See Figure 9-14): Smooth, round-bottomed dents which have a .06 inch minimum radius and occur from the leading edge to a point .75 inch aft of the leading edge are limited to .010 inch. Aft of .75 inch from the leading edge dents are acceptable within the following limits:

1. Outboard of 6 inches from the blade tip, dents cannot exceed .06 inch.

2. Inboard of 6 inches from the blade tip dents cannot exceed .02 inch.

3. Dents within .5 inch of the trailing edge or tip cannot be repaired.

4. Dents over the skin-to-root-fitting bond joint cannot be repaired.

9.220 Inspection and Repair of Tail Rotor Blades(cont'd)

CAUTION

Do not repair any dent that has a sharp cut or break in the skin. If necessary, locally penetrant inspect keeping penetrant materials away from bond joints.

c) Nicks and Notches in Trailing Edge: Blend all nicks and notches in the extreme trailing edge up to a maximum of .05 inch. The blend must extend for 1.0 inch each side of the nick or notch.

d) Erosion of the Leading Edge: Replace any blade where erosion has caused deformation or ripples in the leading edge.

e) Dents, Scratches, and Corrosion on the Root Fitting: Damage on root fittings must be blended out using .10 inch radius within the following limits:

1. No repairs allowed within .5 inch diameter circle from the center of the bearings.

2. Maximum depth of .040 inch all other areas.

f) Rework Process and Measurement of Material Removed: See Main Rotor Blade Repair, Section 9.130.

g) Painting (See Figure 9-14):

1. Clean with M.E.K. and wipe lint-free with a tack rag.

2. Apply a 2 to 3-inch-wide strip of epoxy primer along all exposed bond joints.

3. Apply two full coats of epoxy primer to all exterior surfaces. Time limits are 10 minutes minimum, 8 hours maximum between coats. If 8 hours is exceeded, scuff with 600 grit, M.E.K. wipe and mist primer before applying next coat.

4. Spray finish coat flat black.

5. Spray trim stripes.

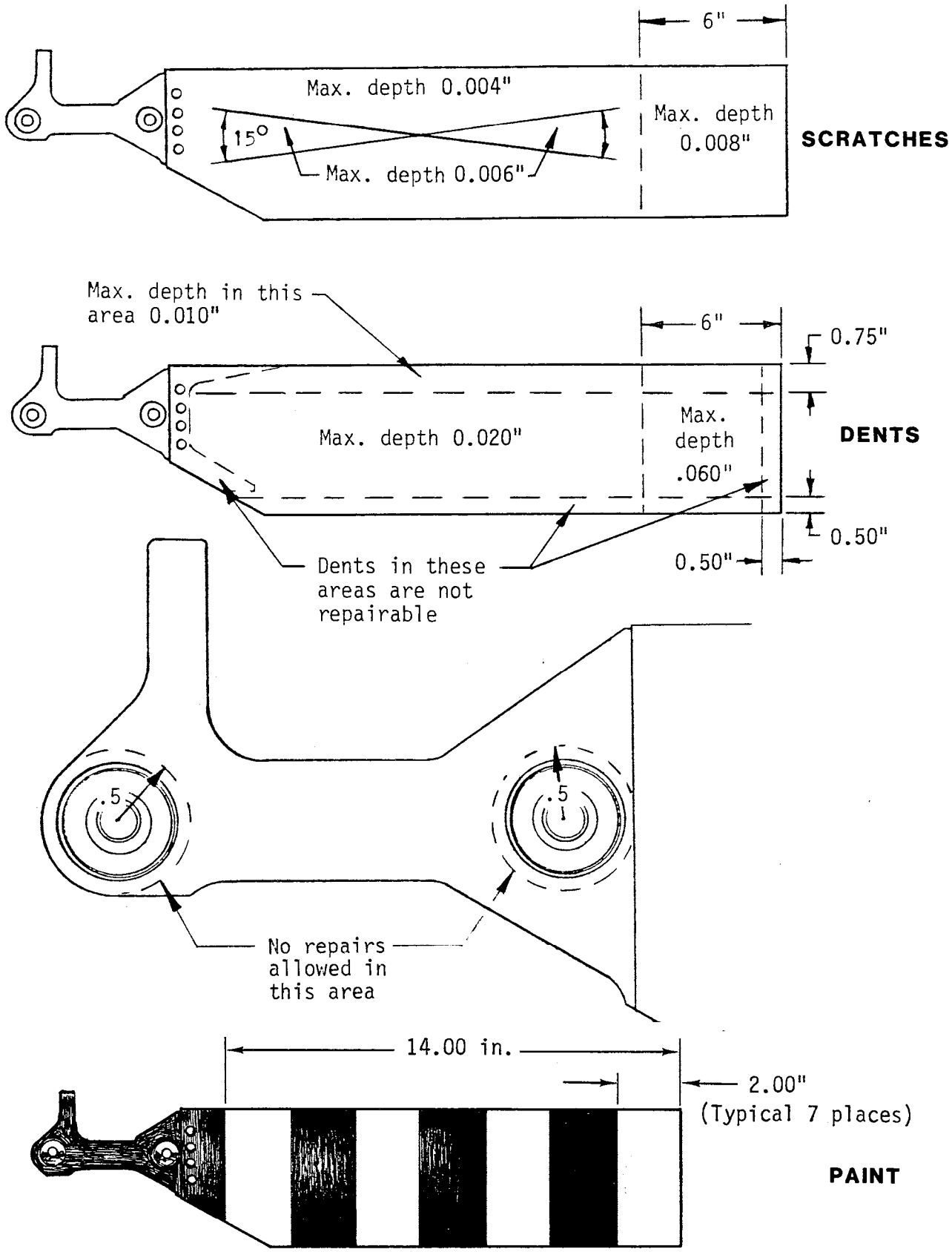

FIGURE 9-14 INSPECTION/REPAIR OF TAIL ROTOR BLADES

CHAPTER 10

RIGGING, TRACK AND BALANCE

Section	Title	Page
10.000	Rigging, Track and Balance	10.1
10.001	Introduction	10.1
10.002	Rod End Adjustment Procedure for Rigging	10.1
10.100	Rigging	10.2
10.110	Main Rotor Flight Controls	10.2
10.111	Cyclic Controls	10.2
10.112	Swashplate	10.3
10.113	Collective Control	10.3
10.120	Main Rotor	10.3
10.121	Cyclic Travel Rigging	10.8
10.122	Collective Travel Rigging	10.11
10.130	Tail Rotor Flight Controls	10.12
10.131	Pedals	10.12
10.132	A316 Bellcrank	10.12
10.133	A331 Bellcrank	10.12
10.134	A120-1 Bellcrank	10.15
10.135	Tail Rotor Pitch Links	10.15
10.140	Tail Rotor Rigging	10.15
10.150	Throttle Correlation Rigging	10.19
10.200	Track and Balance	10.21
10.210	Equipment Requirements	10.21
10.220	Equipment Installation	10.22
10.221	Main Rotor Equipment Installation	10.22
10.222	Tail Rotor Equipment Installation	10.23
10.230	Main Rotor Track and Balance Procedure	10.27
10.231	Main Rotor Balance Adjustments	10.28
10.232	Main Rotor Pitch Link Adjustment	10.28
10.233	Main Rotor Trim Tab Adjustment	10.31
10.234	Main Rotor Track and Balance Trouble Shooting	10.33
10.240	Tail Rotor Balance Procedure	10.35
10.250	Autorotational RPM Adjustment	10.38

Intentionally Blank

CHAPTER 10

RIGGING, TRACK AND BALANCE

10.000 Rigging, Track and Balance

10.001 Introduction

This section contains the procedures necessary to rig the main rotor flight controls, tail rotor flight controls and throttle correlation. The track and balance procedures in this section are to be used in conjunction with Chadwick-Helmuth balancing equipment instructions.

10.002 Rod End Adjustment Procedures For Rigging

The following procedure is a standard for the adjustment of rod ends on the R22 helicopter.

1. Loosen the palnut and jamnut on the rod end.

2. Screw the rod end in or out of the push-pull tube or pitch link as required to obtain the proper rigging adjustment.

3. After adjustment of the rod end, check the witness hole in the push-pull tube or pitch link to ensure the rod end is installed far enough to cover the hole. This should be checked using a piece of .020" safety wire. The safety wire must not pass through the witness hole into the push-pull tube or pitch link.

4. Align the rod ends on both ends of the push-pull tube or pitch link so they will have maximum misalignment clearance with the bellcrank clevis or arm (both rod ends must move "stop to stop"). Collective rigging settings are made by readjusting the total length of the pitch links. Adjustments (turns on the upper rod end or hex portion of the pitch link) to each pitch link will be the same. The pitch link length may be adjusted in three ranges; coarse, medium and fine. Adjustments are made as follows:

   a. Coarse length adjustments to the length are made by rotating the coarse-threaded section of the hex portion of the pitch link (the upper rod end is disconnected, the lower rod end remains connected). Loosen the jamnut on the coarse threads only. Increase blade angle by unscrewing the hex from the lower pitch link. Decrease the angle by screwing the hex portion into the barrel. One full turn changes the blade angle by approximately .72 degrees.

   b. Medium length adjustments are made by rotating the upper rod end only. Disconnect the rod end from the blade and loosen the rod end jamnuts. Increase blade angle by unscrewing the rod end from the hex portion of the pitch link. Decrease the angle by screwing the rod end into the hex. One full rod end turn changes the blade by approximately .48 degrees.

   c. The fine length adjustments are made by rotating only the hexagonal portion of the pitch link. The upper and lower rod ends remain connected. Loosen the jamnuts above the hex. Increase blade angle by screwing the hex out of the lower barrel. Decrease blade angle by screwing the hex into the lower barrel. One full turn of the hex portion changes the blade angle approximately .24 degrees.

5. Torque rod end jamnuts and palnuts per § 1.300.

10.100 Rigging

10.110 Main Rotor Flight Controls

10.111 Cyclic Controls

The cyclic control travel is non-adjustable and is controlled by A211-1 stop plate attached to the cyclic box assembly.

> NOTE
>
> If the A121-1 push-pull tube length has been changed or the length of the A205 fork was changed, they must be readjusted to the dimensions shown in Figure 8-3.

a. Place the cyclic stick against the aft stop and the collective control full down.

b. Adjust the A121-3 push-pull tube to obtain a clearance of .130 inch between the aft arm of the jack shaft and the main rotor gearbox upper cap flange.

10.111 Cyclic controls (cont'd)

c) Check for clearance between the forward jackshaft arm and the A121-7 push-pull tube guide with collective stick full up and cyclic stick full forward. Minimum clearance is .125 inch.

d) Place the cyclic control in the neutral position. This point is 8.3 inches to the right of full left travel and at the mid-point of the total fore and aft travel. (See Figure 10-1). Place the collective control full down.

e) Apply full cyclic and collective friction.

NOTE

Care must be taken not to move the cyclic control from the neutral position.

10.112 Swashplate

a) With the cyclic and collective controls locked in position per Section 10.111, adjust the A121-7 and A121-5 push-pull tubes to obtain a constant clearance from the A281-1 flange.
The minimum clearance from the flange is 5/8 inches. (See Figure 10-2) Nominal setting is 3/4 inches.

10.113 Collective Control

Since the collective slider stop is non-adjustable, this check is to ensure full control travel is obtained and does not interfere with the swashplate travel.

a) Lift the swashplate boot so the uniball and slider tube may be observed.

b) Pull the collective control full up. The uniball must not extend past the top of the slider tube more than .060 inch. If this occurs, adjust the A121-5 and A121-7 push pull tubes as follows:

1. Turn the upper rod ends of the A121-5 and A121-7 push-pull tubes in equally to lower the swashplate.

2. Recheck the uniball-slider tube clearance per Step b above.

10.120 Main Rotor

The main rotor is rigged by determining the average blade angle. Blade angle measurements are taken at the .75 radius of the main rotor (or 37.75 inches in from the blade tip).

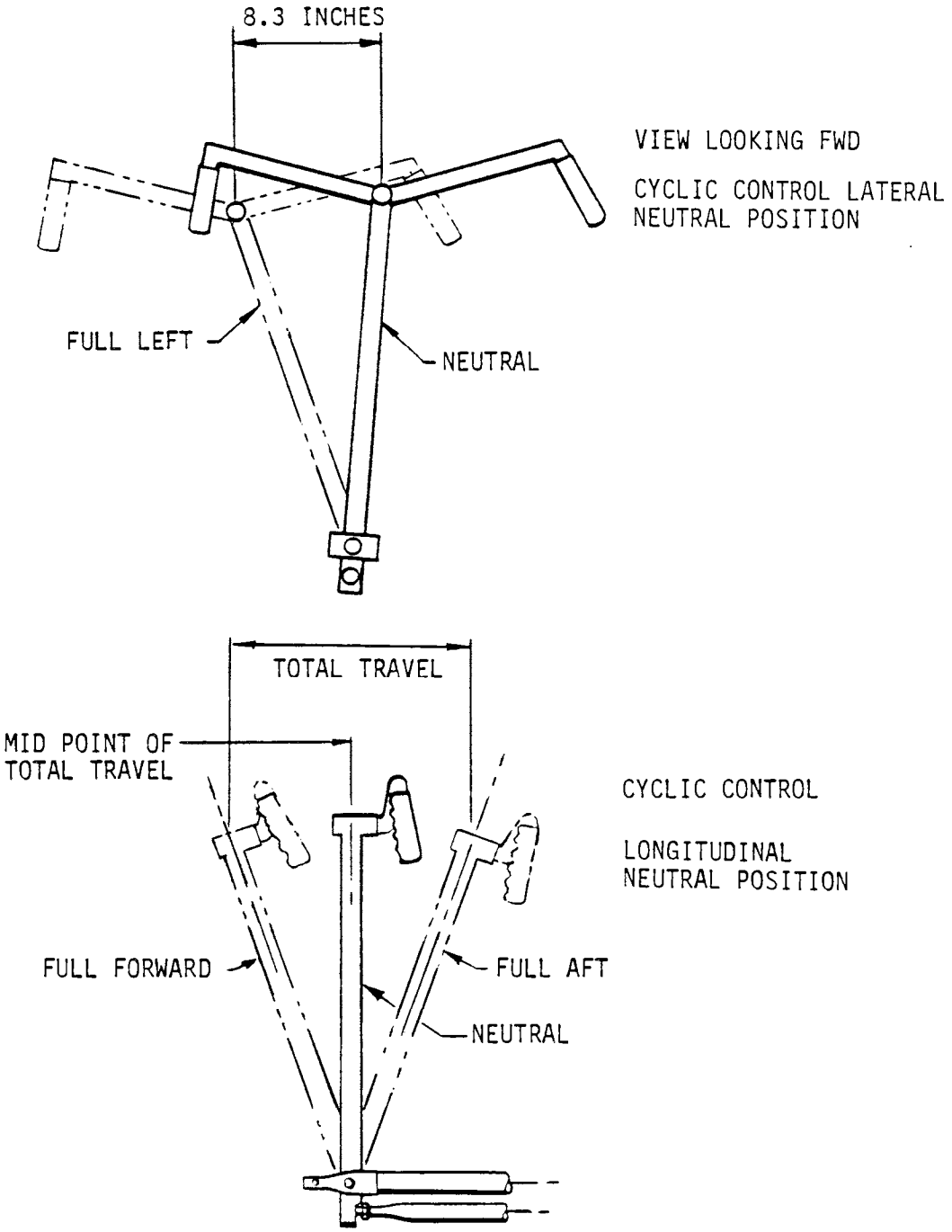

FIGURE 10-1 CYCLIC CONTROL STICK NEUTRAL POSITION

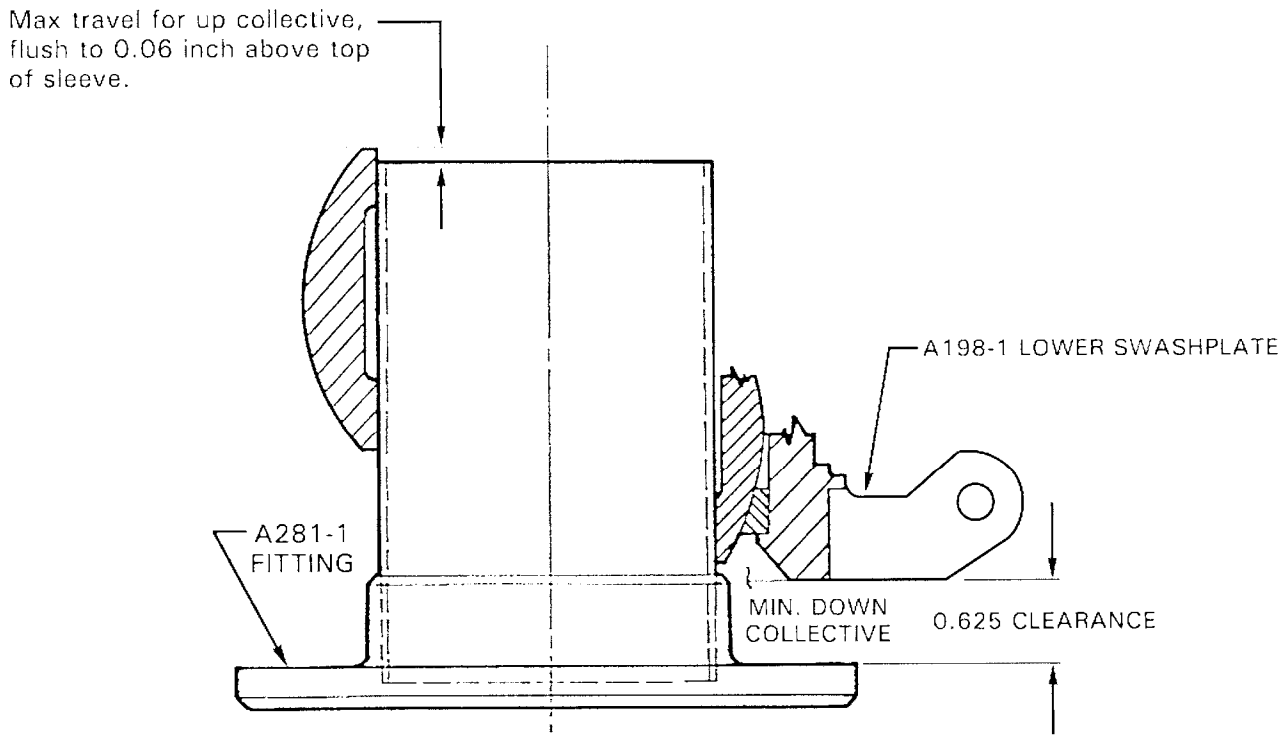

FIGURE 10-2 LOWER SWASHPLATE CLEARANCE

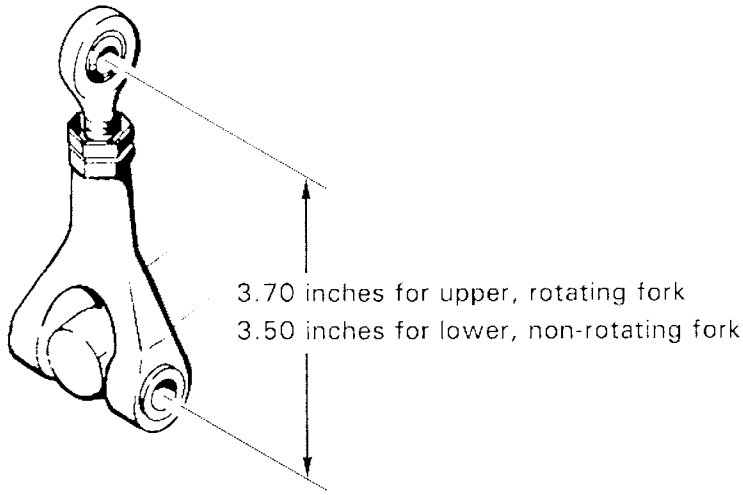

FIGURE 10-3 A205 FORK DIMENSIONS

10.120 Main Rotor

The main rotor is rigged by determining average blade angle. Blade angle measurements are taken at 0.75 radius of main rotor at 37.75 inches in from blade tip.

Main rotor blade angles are measured using MT050-1 rigging fixture and a Kell-Strom KS113 propeller protractor or a comparable protractor (see Figure 10-4). Use following procedure to set up for rigging:

1. Verify A205 forks at swashplate are set to proper length per Figure 10-3. Measuring to bolt bore center lines, lower fork assembly should be 3.50 ± 0.03 inches and upper fork assembly should be 3.70 ± 0.03 inches.

2. Level rotorcraft per Section 1.220 Method 2, Main Rotor Hub.

3. Place a tracking stick at end of one rotor blade and mark height of blade tip. Rotate rotor 180° and mark height of opposite blade tip. Teeter main rotor as necessary to obtain a main rotor track of ± 1 inch.

4. Zero propeller protractor to main rotor hub at location marked "Level Here". The protractor must be placed parallel to teeter hinge bolt.

> NOTE
>
> When zeroing protractor, face or dial must always face one rotor blade to avoid doubling of instrument error. Mark this blade with a piece of tape. When making blade angle readings, face or dial of protractor should always face marked blade.

5. Measure in from tip of each main rotor blade 37.75 inches and place masking tape chordwise across each blade with center of tape over 37.75 inch mark.

> **WARNING**
>
> **Use a grease pencil or soft marker to mark rotor blades. Ball point pens or other sharp instruments can scratch blade skins, causing cracks and fatigue failure of blade.**

Mark each rotor blade with a different color designation, such as red or blue, to be used in recording blade angles.

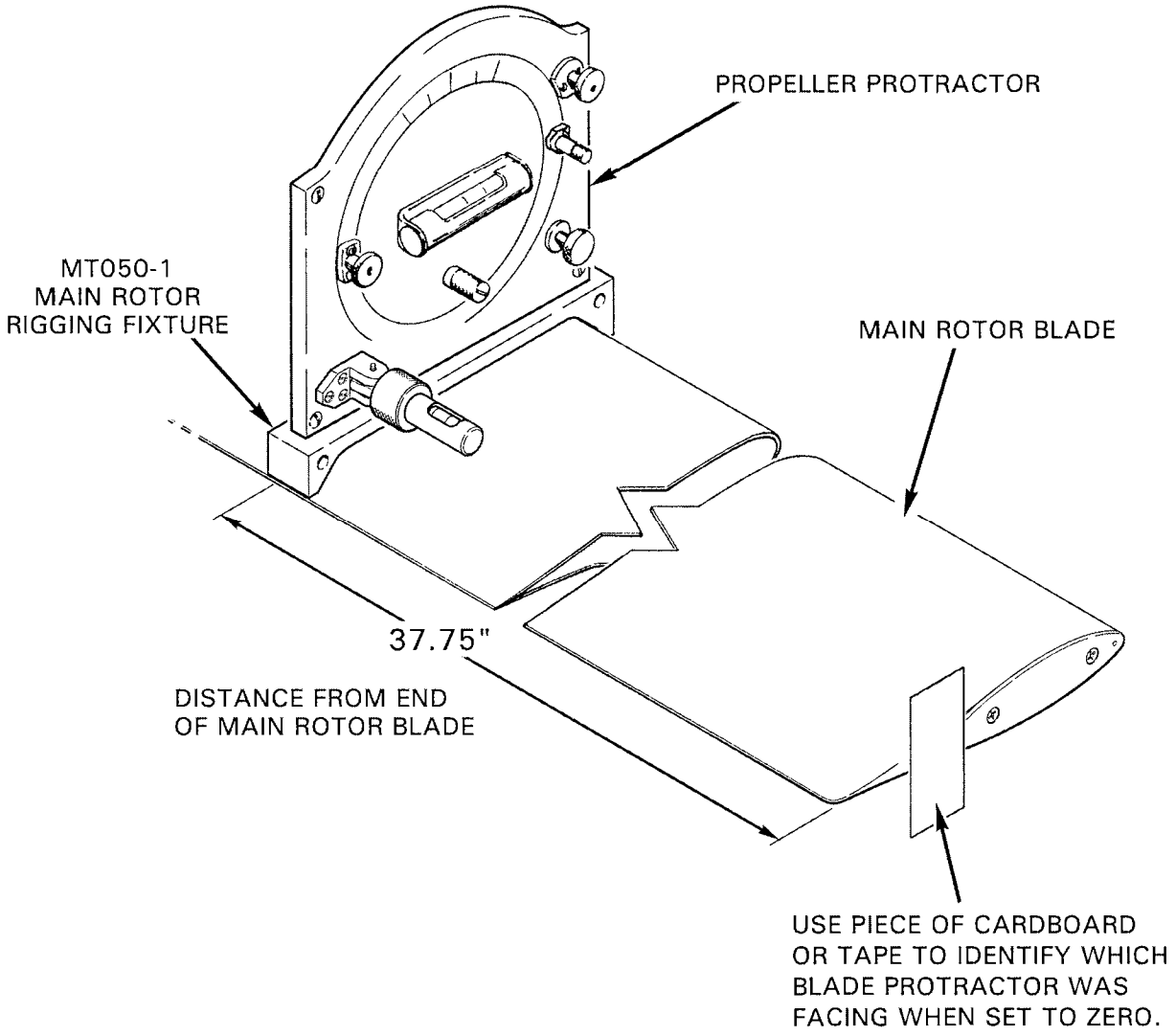
PROPELLER PROTRACTOR
MT050-1
MAIN ROTOR
RIGGING FIXTURE
MAIN ROTOR BLADE
37.75"
DISTANCE FROM END
OF MAIN ROTOR BLADE
USE PIECE OF CARDBOARD
OR TAPE TO IDENTIFY WHICH
BLADE PROTRACTOR WAS
FACING WHEN SET TO ZERO.

10.121 Cyclic Travel Rigging

> NOTE
>
> Adjust collective travel rigging before cyclic travel rigging.

1. Place collective control full down. Place cyclic control in the neutral position laterally (8.3 inches to the right of full left travel) and hold against forward stop.

> NOTE
>
> Sand bags may be used to secure the cyclic control against the forward stop to ensure it will not move.

2. Rotate blades so the pitch links are aligned with the longitudinal axis of the helicopter. Place the tracking stick at one of the blade tips for reference when rotating the rotor.

3. Forward longitudinal cyclic:

   a. Measure blade angles and record below. Rotate rotor 180° and record blade angles below.

Blue Blade Position	Cyclic Full Forward	
Pitch horn aft	_____	°nose up
Pitch horn fwd	+ _____	°nose down
	_____	° ÷ 2 = _____ °

R22, R22HP 8.3/8.8 degrees required
R22 Alpha, Beta 10.5/11.0 degrees required

Red Blade Position	Cyclic Full Forward	
Pitch horn aft	_____	°nose up
Pitch horn fwd	+ _____	°nose down
	_____	° ÷ 2 = _____ °

R22, R22HP 8.3/8.8 degrees required
R22 Alpha, Beta 10.5/11.0 degrees required

   b. Adjust aft swashplate push-pull tube as required (one full turn = 0.42°) to obtain blade angle averages between 8.3° and 8.8°. Additional coarse adjustment is available by simultaneously adjusting the two forward push-pull tubes but they both must be adjusted exactly the same amount.

4. Aft longitudinal cyclic:

   a. Place cyclic control in the neutral position laterally and hold against aft stop.

   b. Measure blade angles and record below. Rotate the rotor 180° and record blade angles below.

10.121 Cyclic Travel Rigging (cont'd)

4. Aft longitudinal cyclic:

Blue Blade Position	Cyclic Full Aft
Pitch horn aft	_____°nose down
Pitch horn fwd	+_____°nose up
	°÷2=_____°
	(8.5/9.0 deg. req'd)

Red Blade Position	Cyclic Full Aft
Pitch horn aft	_____°nose down
Pitch horn fwd	+_____°nose up
	°÷2=_____°
	(8.5/9.0 deg. req'd)

c) Adjust the aft swashplate push-pull tube as required (one full turn = .42°) to obtain blade angle averages between 8.5° and 9.0°. Additional coarse adjustment is available by simultaneously adjusting the two forward push-pull tubes but they both must be adjusted exactly the same amount.

NOTE

If adjustment is required to obtain aft cyclic control blade angles, the forward cyclic must be rechecked.

5. Left lateral cyclic:

a) Place the cyclic control in the neutral position longitudinally (mid travel) and hold the cyclic against the left stop.

b) Rotate the rotor until the pitch links are aligned with the lateral axis of the helicopter. Place the tracking stick at the end of one blade for reference.

c) Measure the blade angles and record below. Rotate the rotor 180° and record the blade angles below.

10.121 Cyclic Travel Rigging (cont'd)

Blue Blade Position	Cyclic Full Left
Pitch horn on right	_____°nose up
Pitch horn on left	+_____°nose down
	_____°÷2=_____°
	(9.0/9.5 deg. req'd)

Red Blade Position	Cyclic Full Left
Pitch horn on right	_____°nose up
Pitch horn on left	+_____°nose down
	_____°÷2=_____°
	(9.0/9.5 deg. req'd)

d) Adjust either of the two forward push-pull tubes as required (one full turn = .6 deg.) to obtain blade angle averages between 9.0° and 9.5°.

6. Right lateral cyclic:

a) Place the cyclic control in the neutral position longitudinally (mid travel) and hold against the right stop.

b) Measure the blade angles and record below. Rotate the rotor and record the blade angles below.

Blue Blade Position	Cyclic Full Right
Pitch horn on right	_____°nose down
Pitch horn on left	+_____°nose up
	_____°÷2=_____°
	(5.5/6.0 deg. req'd)

Red Blade Position	Cyclic Full Right
Pitch horn on right	_____°nose down
Pitch horn on left	+_____°nose up
	_____°÷2=_____°
	(5.5/6.0 deg. req'd)

10.121 Cyclic Travel Rigging (cont'd)

c) Adjust either of the two forward push-pull tubes as required (one full turn = .6 deg.) to obtain blade angle averages between 5.5° and 6.0°.

NOTE

If adjustment is required to obtain right cyclic control blade angles, the left cyclic must be rechecked.

10.122 Collective Travel Rigging

1. Place the cyclic control in the neutral position (See Figure 10-1). Place the collective control full down. Apply full cyclic and collective friction.

2. Rotate the main rotor to align the pitch links with the longitudinal axis of the rotorcraft. Place the tracking stick at the end of one blade to be used as a reference point when turning the rotor.

3. Measure the blade angles using the MT050-1 rigging fixture and propeller protractor.

NOTE

The MT050-1 fixture is placed on top of the blade so it straddles the tape at the 37.75 inch station. The fixture must be held tightly against the leading edge to ensure accurate readings. The face of the protractor must face the marked blade when taking readings. (See Section 10.120, Step 2).

Record blade angles, then rotate rotor 180° and again record angles. Adjust the pitch link of each blade until the two blade angles are within 0.2 degrees of each other when the blade pitch link is in the forward position. Check the blade angles with each blade pitch link aft. These angles must be within 0.2 degrees also.

10.122 Collective Travel Rigging (cont'd)

COLLECTIVE FULL DOWN

Blue Blade	Red Blade
(PHF) Pitch Horn Fwd._____°nose up	(PHF)_____°nose up
(PHA) Pitch Horn Aft._____°nose up	(PHA)+____°nose up
_____°÷2=_____°	____°÷2=___°

4. Pull the collective control to the full up position. Apply full collective friction. Measure the blade angles per Step 3 above and record in the chart below.

Blue Blade_____°nose up	Red Blade_____°nose up
(Low pitch setting 2°) nose up.	(11°/12° above low) pitch setting.

10.130 Tail Rotor Flight Controls

10.131 Pedals (See Figure 10-5)

Pedal rigging is accomplished as follows:

1. Insert a 3/16-inch diameter rigging pin through the hole in the right-hand keel panel and the rigging pin holes in the A317-1 bellcrank.

2. Adjust the A121-9 and -11 push-pull tubes as required to obtain a dimension of 2.90 inches from each pedal to the stops located on each side of the forward console.

10.132 A316 Bellcrank (See Figure 10-5)

Remove the rigging pin and place the left pedal against its stop. Adjust the A121-13 push-pull tube to obtain a minimum of .060 inches between the A316-1 bellcrank arm and the vertical firewall control tunnel.

10.133 A331 Bellcrank

Place the right pedal against its stop. Adjust the A121-15 push-pull tube to obtain a minimum clearance of .100 inches between the A331-1 bellcrank and the actuator gearbox housing (See Figure 10-6).

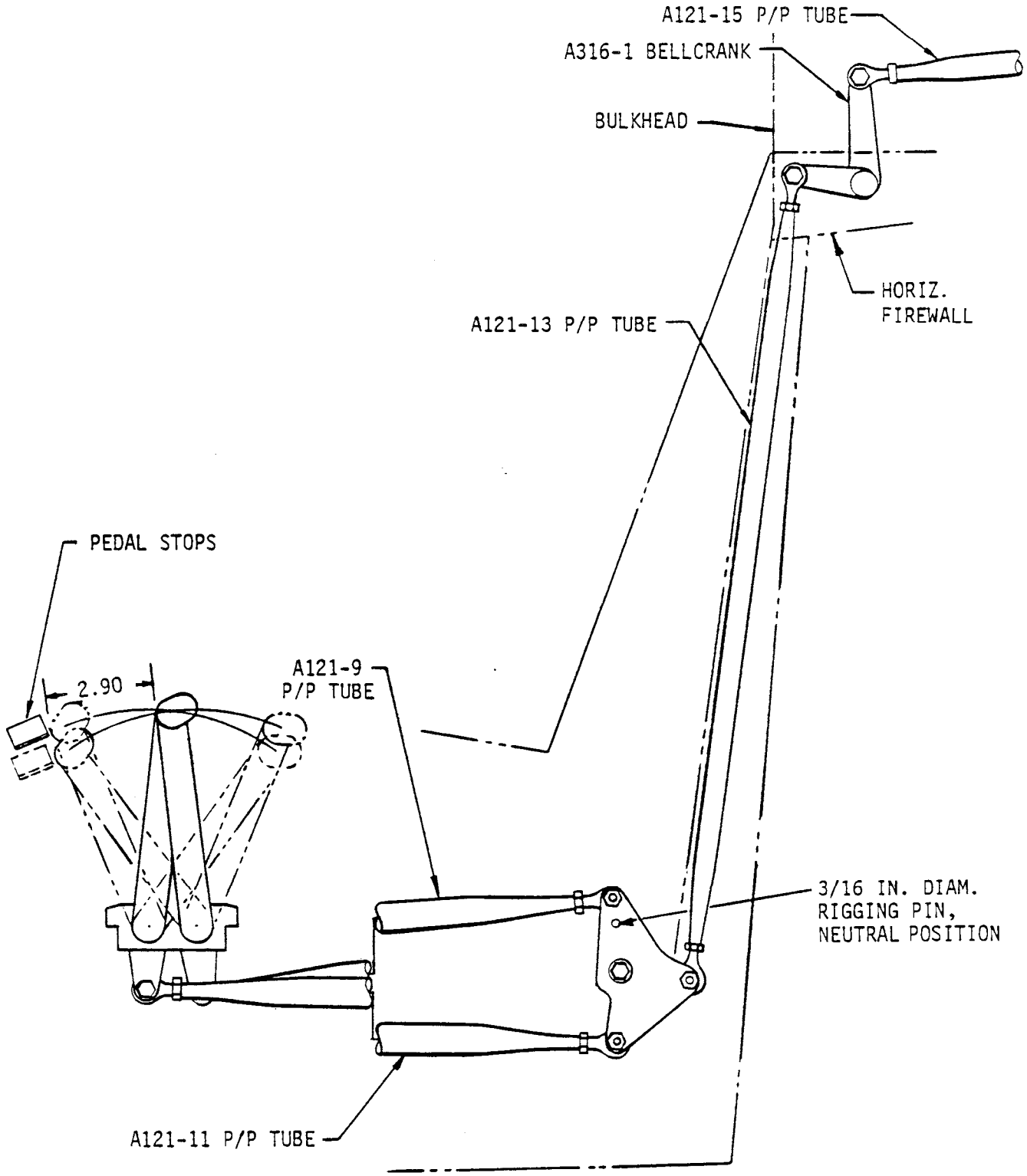

FIGURE 10-5 PEDAL CONTROL INSTALLATION

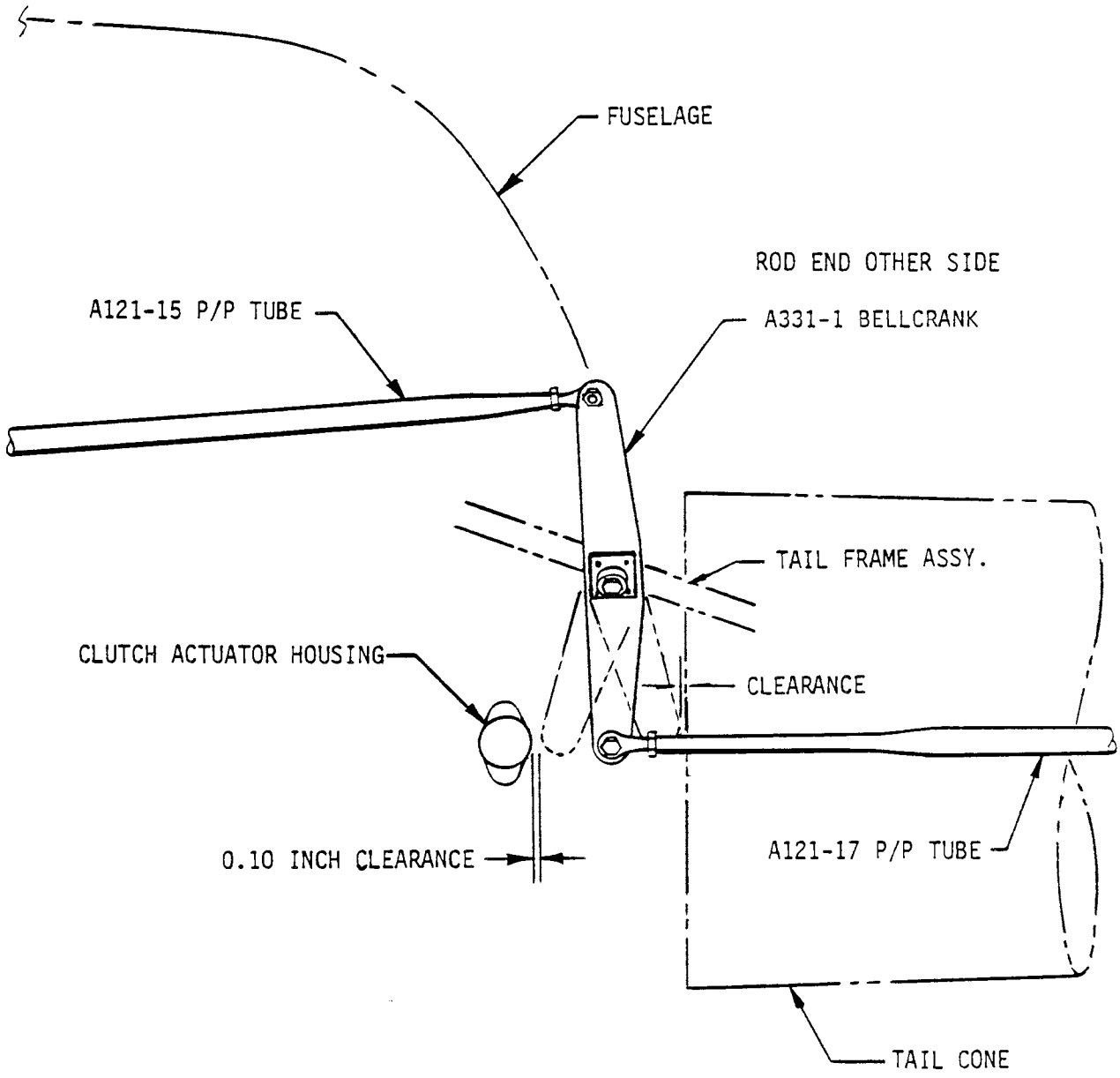

VIEW LOOKING DOWN

FIGURE 10-6 A331 BELLCRANK INSTALLATION

10.133 A120-3 Bellcrank (cont'd)

> NOTE
>
> Actuator must be disengaged when adjusting A331 bellcrank to check closest point.

Place left pedal against its stop and check for clearance between A331-1 bellcrank and tailcone.

10.134 A120-1 Bellcrank

With tail rotor pedals in neutral position, adjust A121-17 push-pull tube as required to obtain a nominal dimension of 4.85 inches between bellcrank arm center line and machined face of tailcone casting (see Figure 10-7).

10.135 Tail Rotor Pitch Links

If applicable, adjust pitch links to a dimension of 2.360 inches between rod end centers (See Section 8.570).

10.140 Tail Rotor Rigging

> **WARNING**
>
> **Both pitch links must be same part number (same type and material). Mixing one-piece with adjustable-length pitch links is prohibited. Mixing steel one-piece with aluminum one-piece pitch links is prohibited.**

1. Set up:

   a. Ensure removable pedals are installed.

   b. Level rotorcraft per Section 1.220 Method 2, Main Rotor Hub.

   c. Rotate tail rotor until forward blade is parallel to tailcone.

   d. Tape a tracking stick to tailcone at tip of forward blade.

> NOTE
>
> A tracking stick can be made using a 1 inch by 12 inch strip of aluminum with a 90° bend 2 inches from one end.

   e. Place left pedal against its stop. Using a tip drain hole as a reference, first mark tracking stick where blade tip passes stick.

   f. Using clutch shaft so teeter angle is not disturbed, rotate tail rotor 180° until opposite blade tip drain hole is aligned with tracking stick. Mark stick.

10.140 Tail Rotor Rigging (cont'd)

g. Adjust teeter of tail rotor to position blade tip mid point between marks. This will be the left-pedal tacking mark. Rotate tail rotor and check that the blades track. Repeat above procedure as necessary to track tail rotor within 0.125 inch.

2. Measure tail rotor blade angles as follows:

a. Using a soft marker or grease pencil mark each blade as red or blue.

b. Measure in from each blade tip 5.25 inches (0.75 radius) and place a mark chordwise on each blade at this point (soft marker or grease pencil).

c. Have some one hold forward blade tip at left pedal track mark.

d. Place MT050-2 rigging fixture on aft blade inboard side.

NOTE
The MT050-2 fixture must be centered on 0.75 radius mark.

e. Using a propeller protractor measure blade angle and record below. Rotate tail rotor 180° and record opposite blade angle.

Pedals Full Left

Blue Blade		_____ °nose right
Red Blade	+	_____ °nose right
	=	_____ °
	÷2 =	_____ °
		(19.0°/19.5° required)

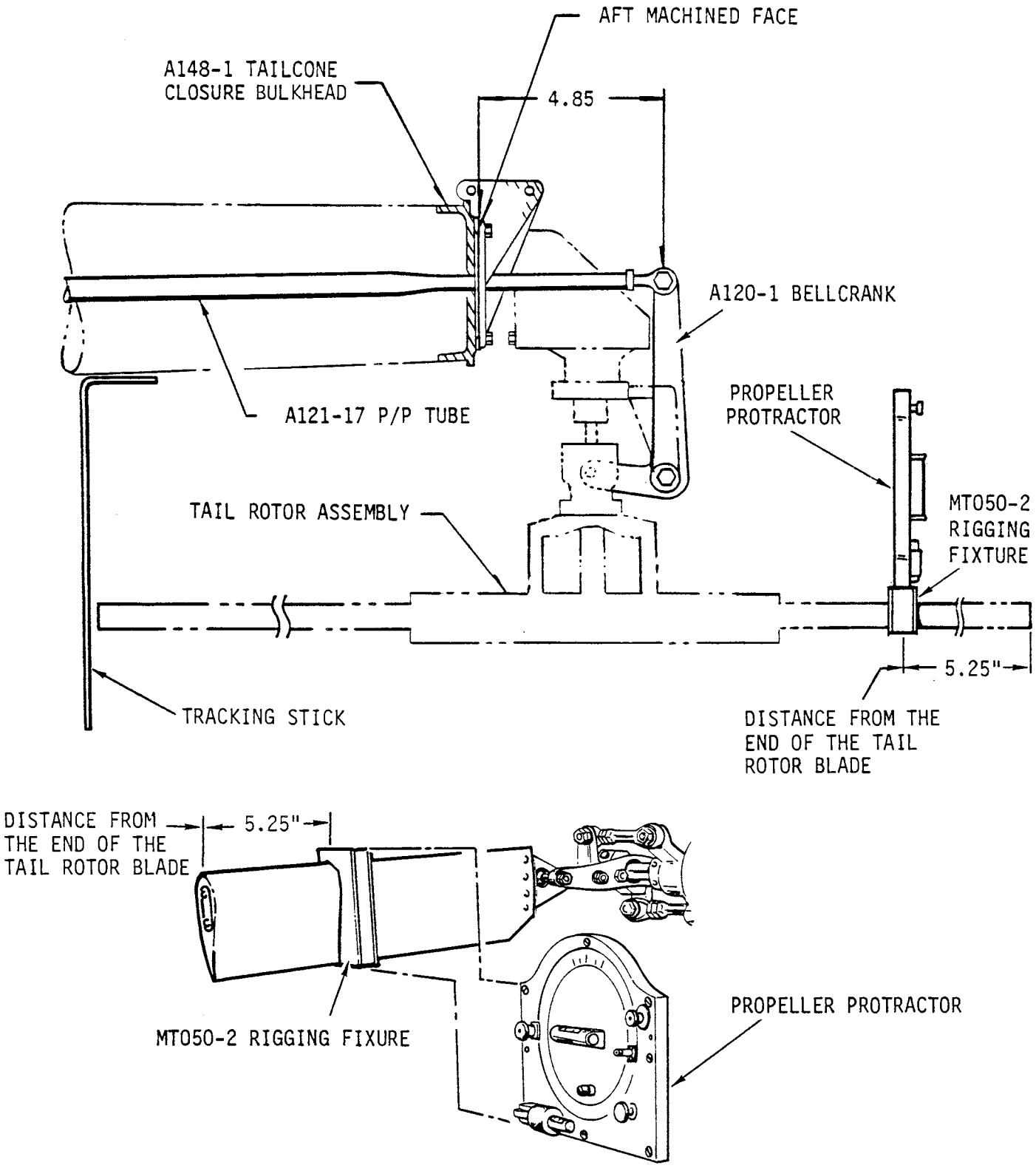

FIGURE 10-7 A120-1 BELLCRANK INSTALLATION

10.140 Tail Rotor Rigging (cont'd)

CAUTION

For acceptable track, differences between Blue and Red blade angles must not exceed .4 degrees. If the blade angles cannot be adjusted to within .4 degrees of each other using the pitch links they should be replaced.

NOTE

Pitch link jamnuts must be tight to ensure accurate blade angle measurements.

f) Adjustment of the blade angles is made using the rod ends of the A121-17 push-pull tube. One full turn of the rod end will change the blade angles .42 degrees. Adjust the rod end as necessary to obtain 19.0 to 19.5 degrees.

g) Place the right pedal against its stop. Measure the blade angles and record below.

NOTE

When pedal is placed against the right stop, a new tracking mark must be placed on the track stick as the tip path will change due to blade angle change.

	Pedals Full Right
Blue Blade	_____ °nose left
Red Blade	+ _____ °nose left
	_____ °÷2= _____ °
	(9.6/10.6 deg. req'd)

h) Adjust the A121-17 push-pull tube as necessary to obtain blade angles of 9.6 to 10.6 degrees.

NOTE

If adjustment is required to obtain right pedal blade angles, the left pedal angles must be rechecked.

10.140 Tail Rotor Rigging (cont'd)

i) If the blade angle range, for left and right pedal settings, cannot be obtained using the above procedure, this indicates the pedal travel is either too great or too small. Use the following procedure to check and adjust pedal travel:

1) Add the right and left pedal angles together. If the total is less than 28.6° the pedal total travel is too small. If the total is greater than 30.1° the total travel is too great.

2) To increase the total travel, lengthen the A121-9 and -11 push-pull tubes attached to the tail rotor pedals.

3) To decrease the total travel, shorten the A121-9 and -11 push-pull tubes.

NOTE

These changes should be made in 1/2 turn increments of the push-pull tube rod ends.

4) Recheck the tail rotor blade angles per steps e through h above.

j) Ensure all rod ends are installed properly by checking the push-pull tube witness holes. Tighten all rod end palnuts and jamnuts. Torque stripe all jamnuts.

10.150 Throttle Correlation Rigging (See Figure 10-8)

a) For inservice check and adjustment, perform the following:

1) Rotate the throttle in "off" direction through the overtravel spring to the positive stop.

2) Holding the throttle tight against the stop, raise collective to full up stop while observing throttle bellcrank on carburetor. Throttle bellcrank should just barely start to move when the collective up stop is reached.

Adjust A327-1 Overtravel Spring Assembly to fit following geometry with no spring compression: Collective full up, throttle twist grip rotated full closed, A609-2 Arm at dimension shown. Then, adjust A336 or B364 Push-Pull Tube to fit with carburetor arm just off idle stop (0.02-0.05 inch movement at rod end bolt) (push-pull tube must be readjusted whenever idle stop is adjusted). Select A336-1 or -2 push-pull tube, or install A130-54 spacer(s), as required to obtain proper adjustment.

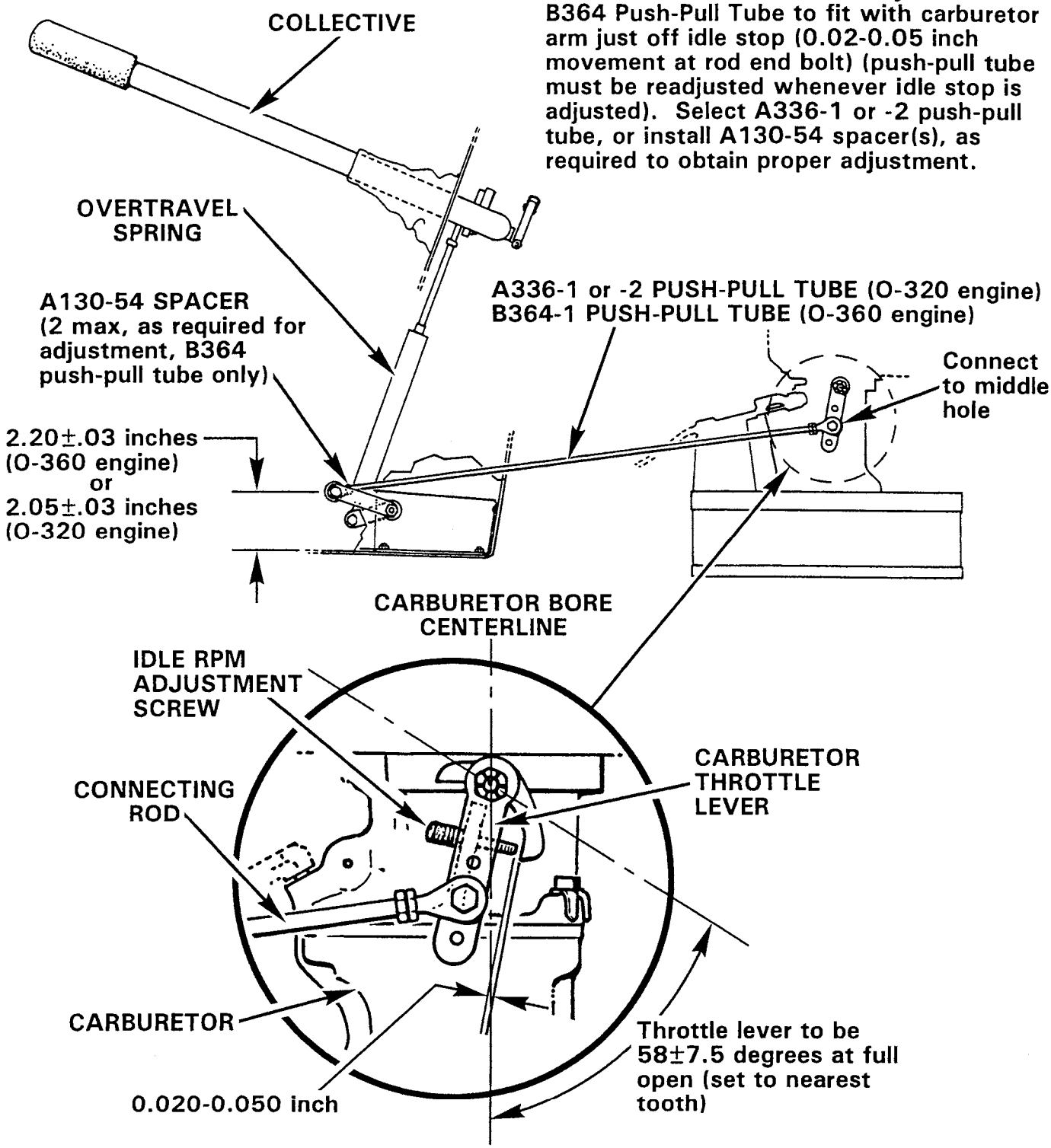

FIGURE 10-8 THROTTLE CORRELATION RIGGING

10.150 Throttle Correlation Rigging (cont'd)

NOTE

Before adjusting throttle connecting rod, ensure idle RPM and engine shimming are correctly adjusted per Sections 2.210 and 6.130.

3. See Figure 10-8. If required, adjust length of throttle connecting rod for 0.010-0.050 inch gap between carburetor butterfly bellcrank and idle RPM adjustment screw when performing step 2.

4. Tighten jamnut(s), check witness holes, and safety wire rod end.

10.200 TRACK AND BALANCE

Chadwick-Helmuth Vibrex or equivalent equipment is required to perform main rotor in-flight track check and dynamic balancing of main and tail rotors.

10.210 Equipment Requirements

The following list of equipment may be used for R22 track and balance:

a) Chadwick-Helmuth Balancer Model Number:
177M05
177M-6
177M-6A
2000 - series
8350 - series
8500 - series
M192 - series

10.210 Equipment Requirements (cont'd)

a) Model Number 177M-7
177M-7A

b) Strobex

Model Number 135M-10*
135M-10A*,B* and C*
135M-11

*When tracking the main rotor using the 135M-10 Series Strobex a double interrupter must be used.

c) Cables, accelerometers, pickups and targets.

Model Number	3140	D.C. Adapter Cable
	3030	Magnetic pickup
	3319-1	Magnetic cable
	4177	Accelerometer
	4296-1 and 2	Accelerometer Cable
	3300	Target Patches
	4270	Target Patches

d) Brackets

Robinson PT121 Magnetic Pickup Bracket

e) Charts

Robinson Main Rotor Chart
Tail Rotor Chart

10.220 Equipment Installation

10.221 Main Rotor Equipment Installation (See Figure 10-9A)

Install the Chadwick Helmuth equipment for Main Rotor Track and Balance as follows:

a) Install the 4177 accelerometer under the left console attachment screw with cable connector end down.

b) Install PT121 bracket onto the lower right-hand side of the swashplate.

10.221 Main Rotor Equipment Installation (cont'd)

> **WARNING**
>
> Ensure attachment bolts are torqued to 100 in.-lbs plus nut drag. The PT121 bracket will remain installed for inflight track and balance.

c) Install the 3030 magnetic pickup onto the PT121 bracket. Set the interrupter pickup gap to .030" ± .010".

d) Attach the 3319-1 cable to the magnetic pickup. Pull collective stick full up and cyclic stick full left. Secure the cable to the mast fairing with duct tape. Route the cable to the lower front of the left door frame. Secure the cable every 12" with duct tape.

> **CAUTION**
>
> Security of the cable is essential as the helicopter will be flown at Vne.

e) Attach the 4296-1 cable to the accelerometer mounted on the console. Secure with duct tape.

> **CAUTION**
>
> Ensure the cable cannot become tangled with tail rotor pedals.

f) Attach the cables to the balancer and secure excess cable to the bracket in front of the left seat.

g) Apply the 4270 target tapes to the main rotor blades per Figure 10-9.

10.222 Tail Rotor Equipment Installation (See Figure 10-9C)

a) Install the 4177 accelerometer under the top forward tail rotor gearbox output cartridge attachment bolt. Connector end of accelerometer must point up.

b) Connect the 4296-2 cable to the accelerometer. Wrap cable around the tailcone several times towards the forward end. Secure with duct tape.

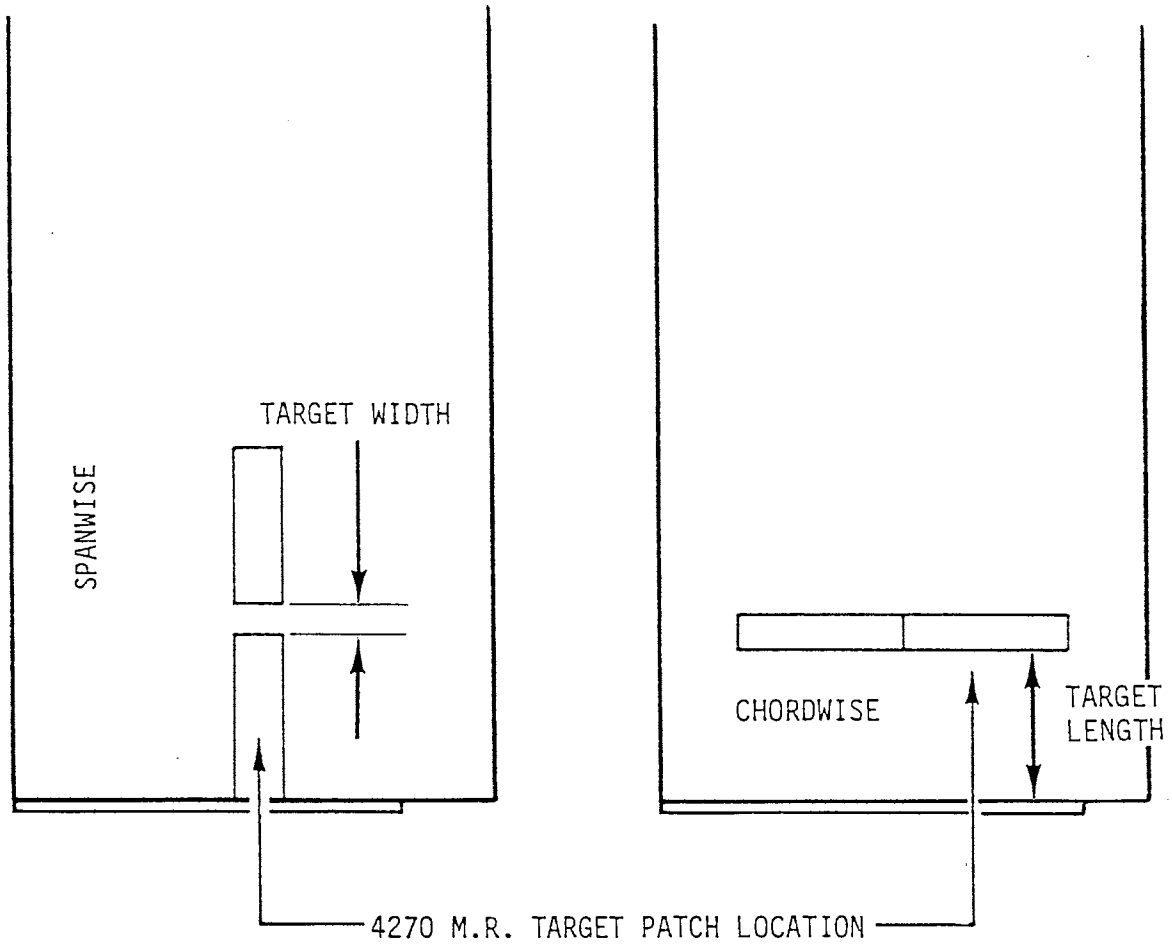

FIGURE 10-9 MAIN ROTOR TARGET PATCH LOCATION

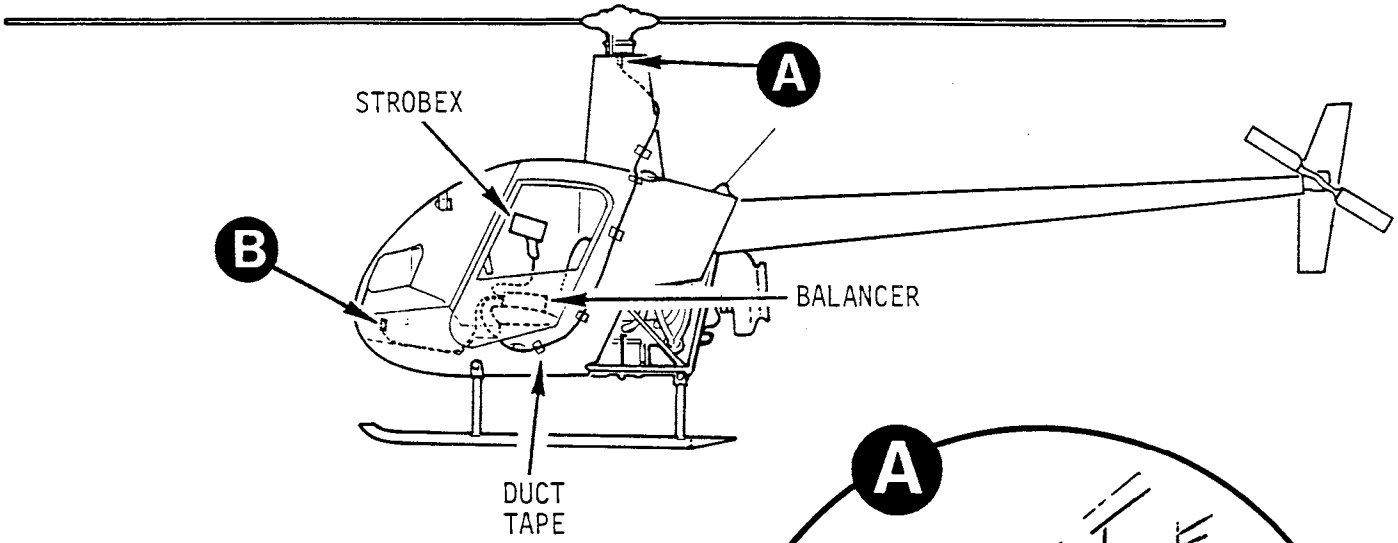

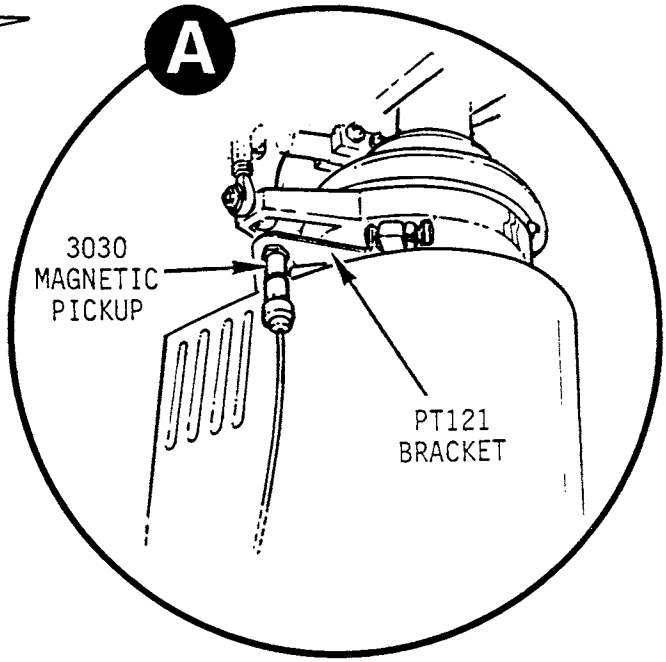

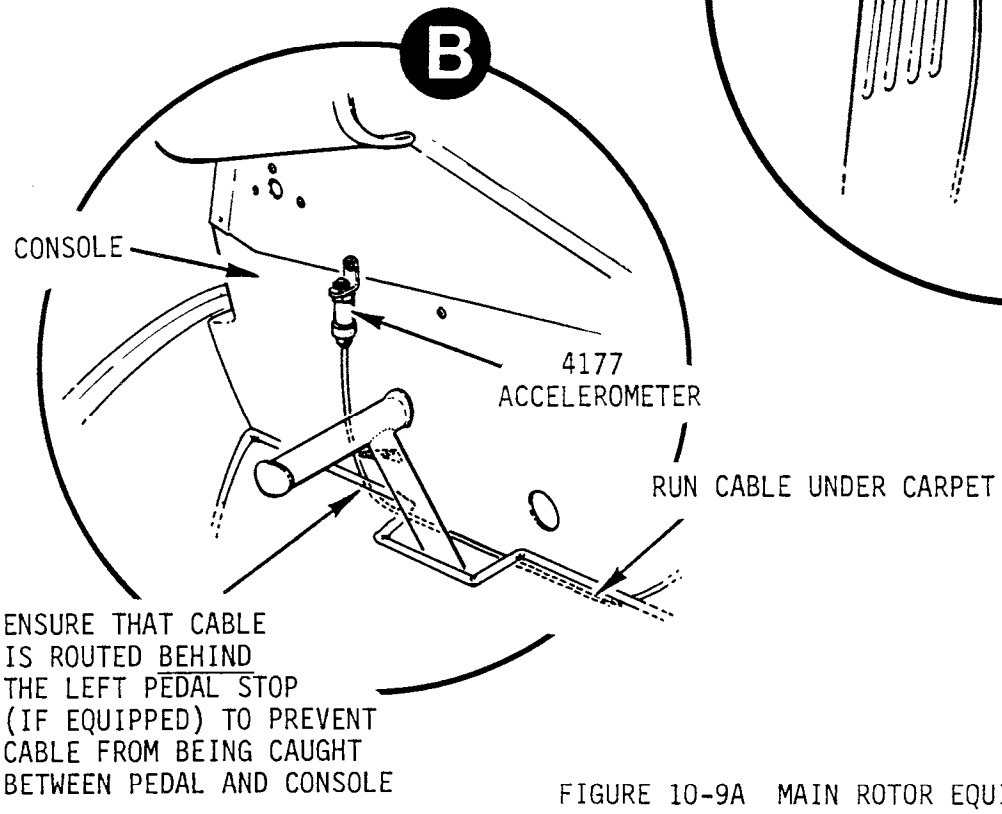

FIGURE 10-9A MAIN ROTOR EQUIPMENT INSTALLATION

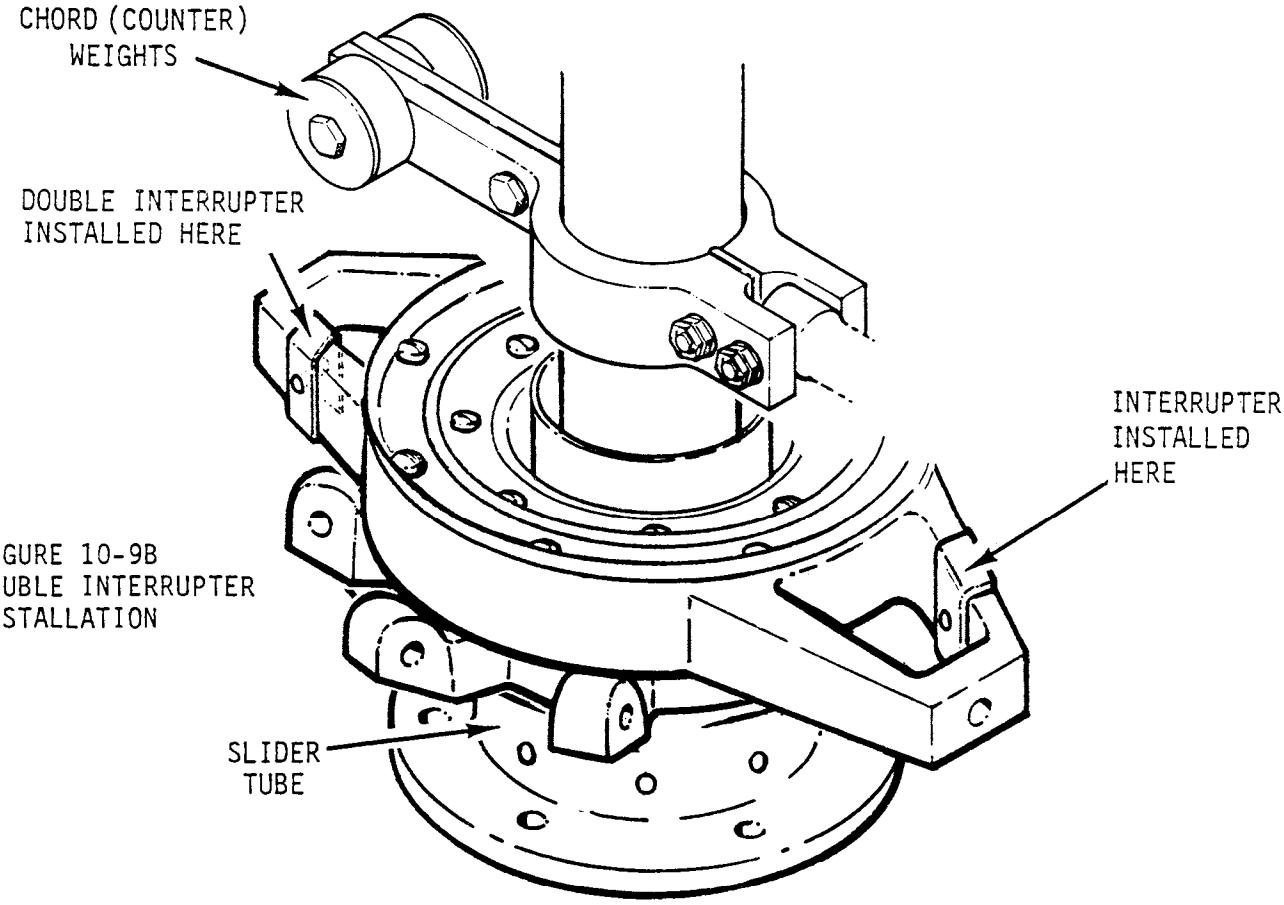

FIGURE 10-9B
DOUBLE INTERRUPTER
INSTALLATION

If the interrupters are installed as shown above the Main Rotor Balancing Chart will be out of phase.

Using a model 135M-10 Strobex with the interrupters installed per above drawing and using Doubler Interrupter Logic on the Balance Box, the Forward Blade must be relabeled as Aft. The Aft Blade must be relabeled Forward. Adding and subtracting chord weights and rotor head shifts would also be out of phase.

To use the Main Rotor Track and Balance Chart without correcting it, you must reverse the interrupters. The double interrupter must be on the opposite side of the driveshaft as the Chord (counter) weights.

This page intentionally left blank.

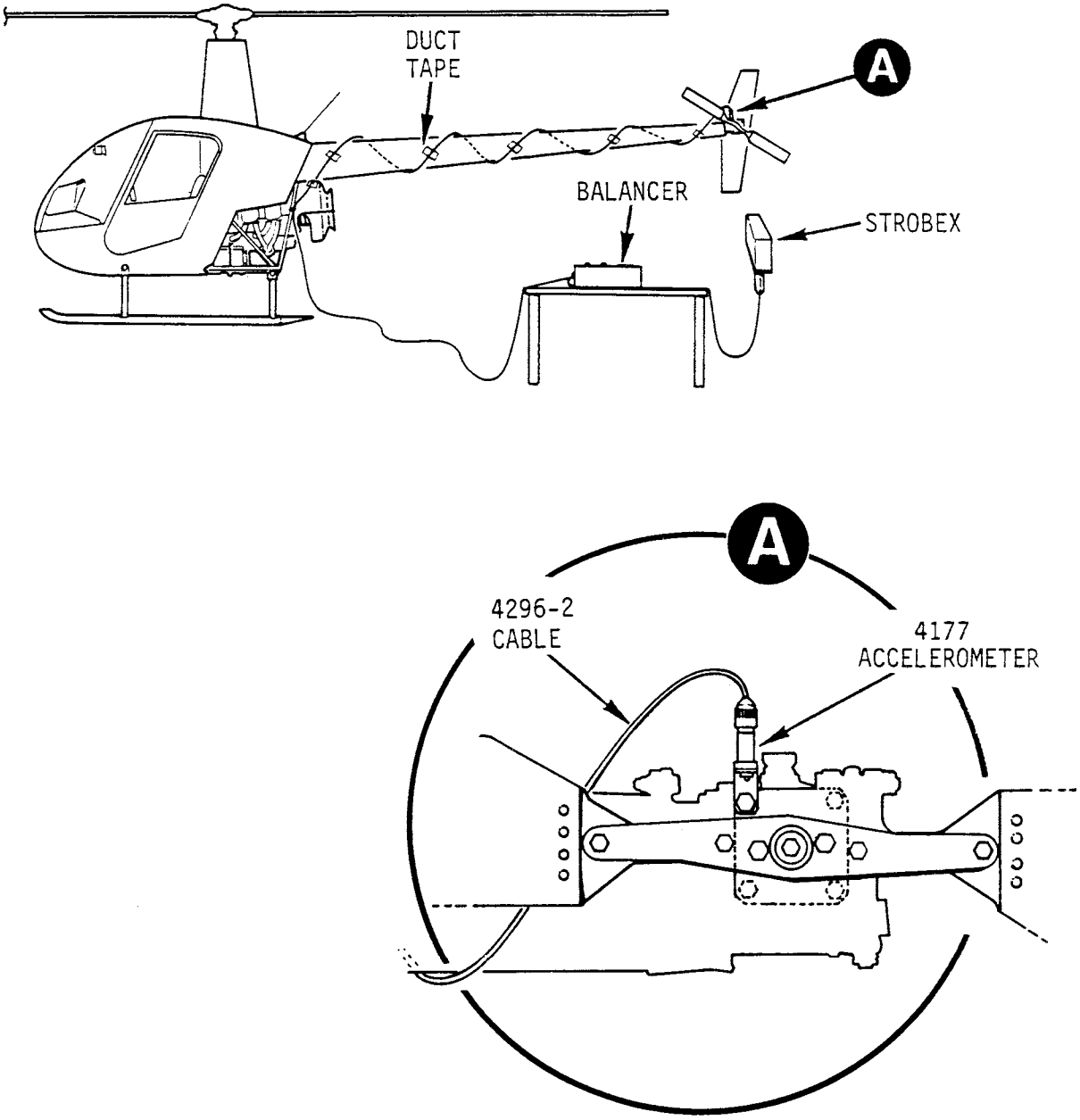

FIGURE 10-9C TAIL ROTOR EQUIPMENT INSTALLATION

10.222 Tail Rotor Equipment Installation (cont'd)

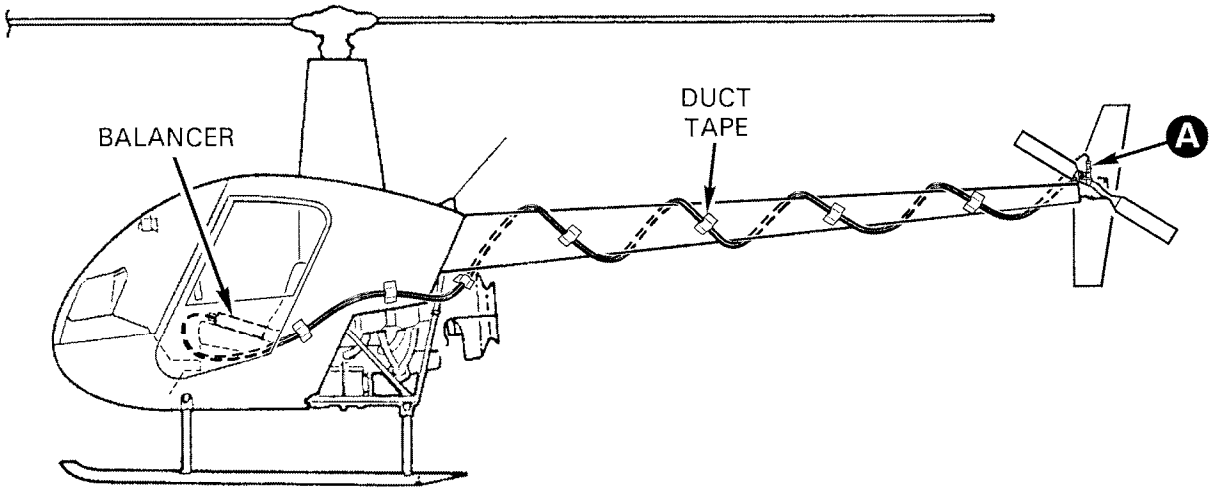

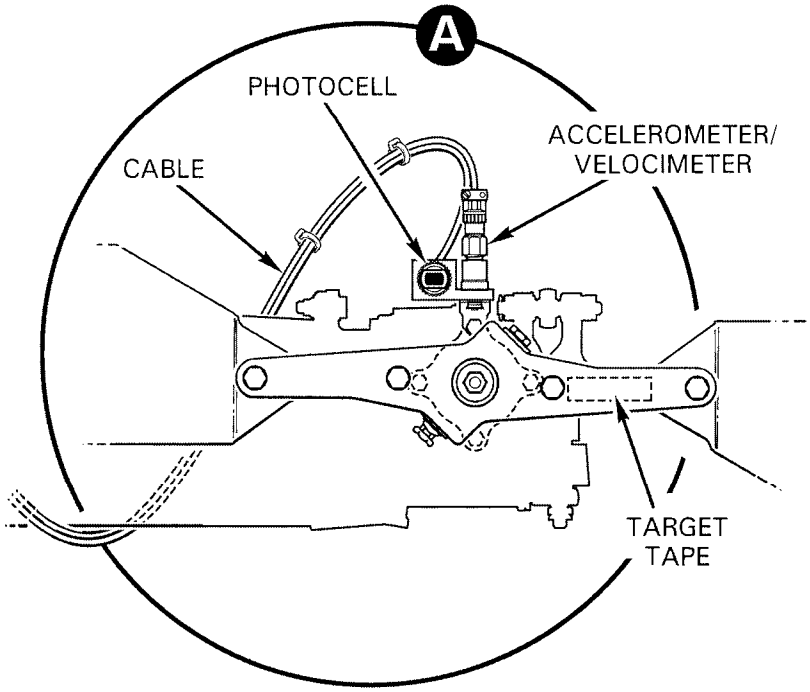

WARNING

Tail rotor balancing equipment must be removed for flight.

FIGURE 10-9C TAIL ROTOR BALANCING EQUIPMENT INSTALLATION

10.222 Tail Rotor Equipment Installation (cont'd)

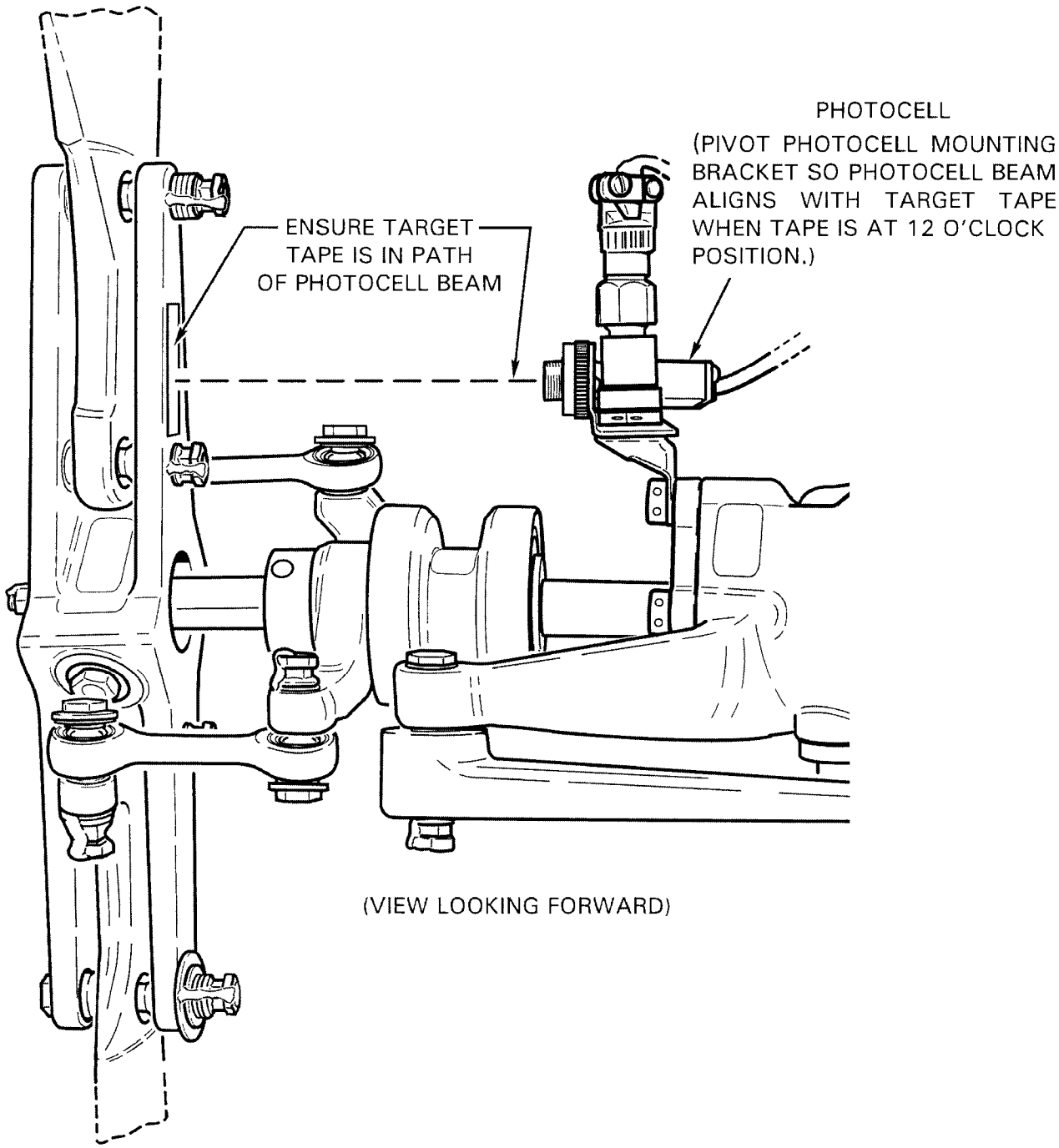

WARNING

Tail rotor balancing equipment must be removed for flight.

FIGURE 10-9D TAIL ROTOR PHOTOCELL INSTALLATION

10.222 Tail Rotor Equipment Installation (cont'd)

c) Place a target tape on tail rotor hub inboard surface approximately 1 inch in from on blade's outboard attach bolt.

> **CAUTION**
>
> Ensure cables cannot become entangled in tail rotor.

d) Refer to Figures 10-9C and 10-9D. Install and secure photocell and mounting bracket to velocimeter bracket as shown. Connect extension cable to photocell and wrap cable several times around tailcone and secure with duct tape.

e) Connect cables to balancer.

10.230 Main Rotor Track and Balance Procedure

> NOTE
>
> Prior to installing balancing equipment, verify blades are clean and smooth, rod ends & spherical bearings & scissors play are within limits, correct upper (rotating) scissors friction, correct swashplate tilting friction, and correct teeter and coning hinge frictions. Verify interrupter is opposite chord arm.

In-flight track and balance is accomplished using the following testing and adjustment sequence:

1. Check main rotor track in a hover. When using Vibrex 177- or 8350- series equipment, place Function knob in track position, RPM (flash rate) on Strobex to 424. Adjust track by shortening high blade pitch link per Section 10.232 to bring track within 0.25 inch.

2. Check main rotor balance in a hover. For Vibrex 177- or 8350- series equipment, place Function knob in "A" position, RPM on Phazor to 530. Adjust balance as indicated by main rotor balance chart 0.2 IPS.

3. Fly the helicopter at 50, 60, 70, 80, 90, and 100 knots. Check track at each airspeed and record.

> **WARNING**
>
> **Do not exceed Vne of helicopter when checking in-flight track.**

4. Make slight tab adjustment to correct for a climbing blade by bending trim tab down per Section 10.233.

5. Repeat Steps 3 & 4 as required until track is within 3/8 inch at all airspeeds.

6. Readjust main rotor balance in an hover to no greater than 0.2 IPS.

7. Check autorotational RPM per Section 10.250. Adjust as required.

8. Evaluate collective trim, longitudinal cyclic trim, and lateral cyclic trim. Adjust as required.

9. Check main rotor balance in an hover. Verify no greater than 0.2 IPS. Adjust as required.

10.231 Main Rotor Balance Adjustments

Spanwise balance adjustments are made by adding or subtracting weight as indicated by the balance chart. Weight is changed by removing the blade tip cover and changing A298 tip weights. Fine adjustments may be made with AN960-10 or AN960-10L washers and also by trimming washers.

Coarse adjustment of chordwise balance is accomplished by shifting rotor hub (see Section 9.124) as indicated on balance chart. Fine adjustment of chordwise balance is accomplished by adding or subtracting A255-1 or -2 chord weights or AN970-4 washers as indicated by balance chart. A maximum of two A255-2 weights (two A255-2 weights equal six A255-1 weights) may be installed.

Three A255-1 weights = One A255-2 weight

Eight AN970-4 washers = One A255-1 weight

10.232 Main Rotor Pitch Link Adjustment

Two adjustments can be made to change main rotor pitch link length. Coarse adjustments are made by loosening the upper rod end jam nut, disconnecting the rod end from the blade pitch horn, and turning the rod end up or down (one-half turn of rod end changes track approximately 0.25 inch).

Fine adjustments are made by leaving the upper rod end connected to the pitch link and loosening the rod end jam nut, loosening the barrel jam nut, and then screwing the barrel up or down. One barrel revolution is equivalent to one-half turn of rod end. Partial turns of the barrel can be made by counting the number of hex flats rotated (see Figure 10-11) or by noting degrees of barrel rotation.

> CAUTION
>
> Check witness holes in pitch links after making an adjustment; a piece of 0.020-inch diameter safety wire must not pass through.

MAIN ROTOR TRACK AND BALANCE CHART

SHIP S/N

Page ____ of Page _____

MOUNT ACCELEROMETER ON LEFT SIDE OF CONSOLE POINTED DOWN

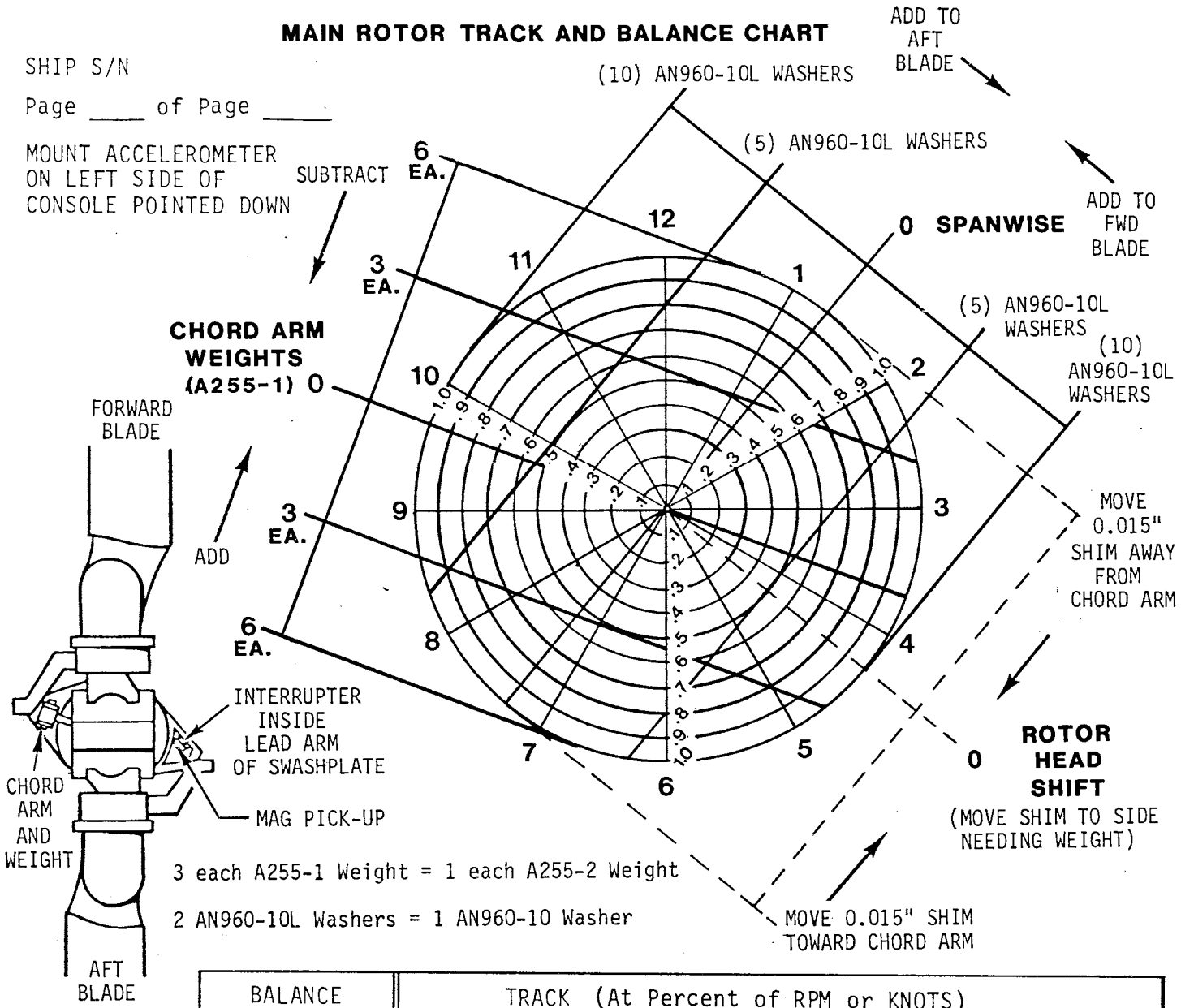

BALANCE		TRACK (At Percent of RPM or KNOTS)							
CLOCK	IPS	HOVER	CLIMB	50	70	80	90	100	104

CHANGE MADE:

CHANGE MADE:

CHANGE MADE:

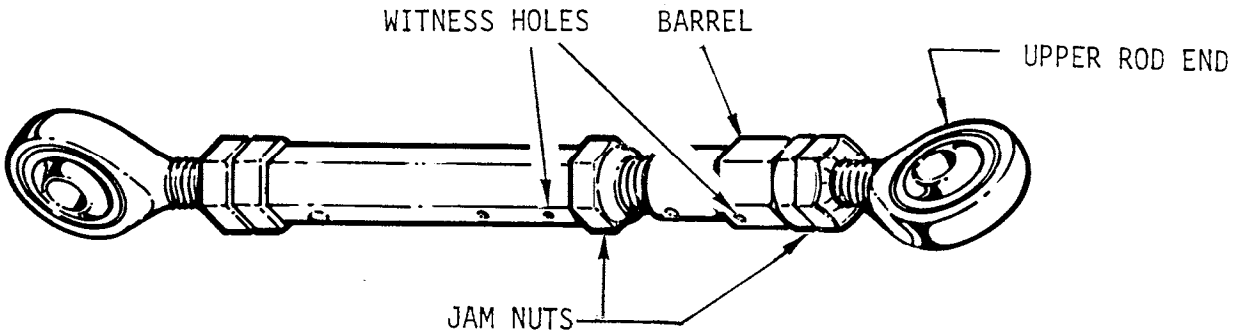

FIGURE 10-11 MAIN ROTOR PITCH LINK

Intentionally Blank

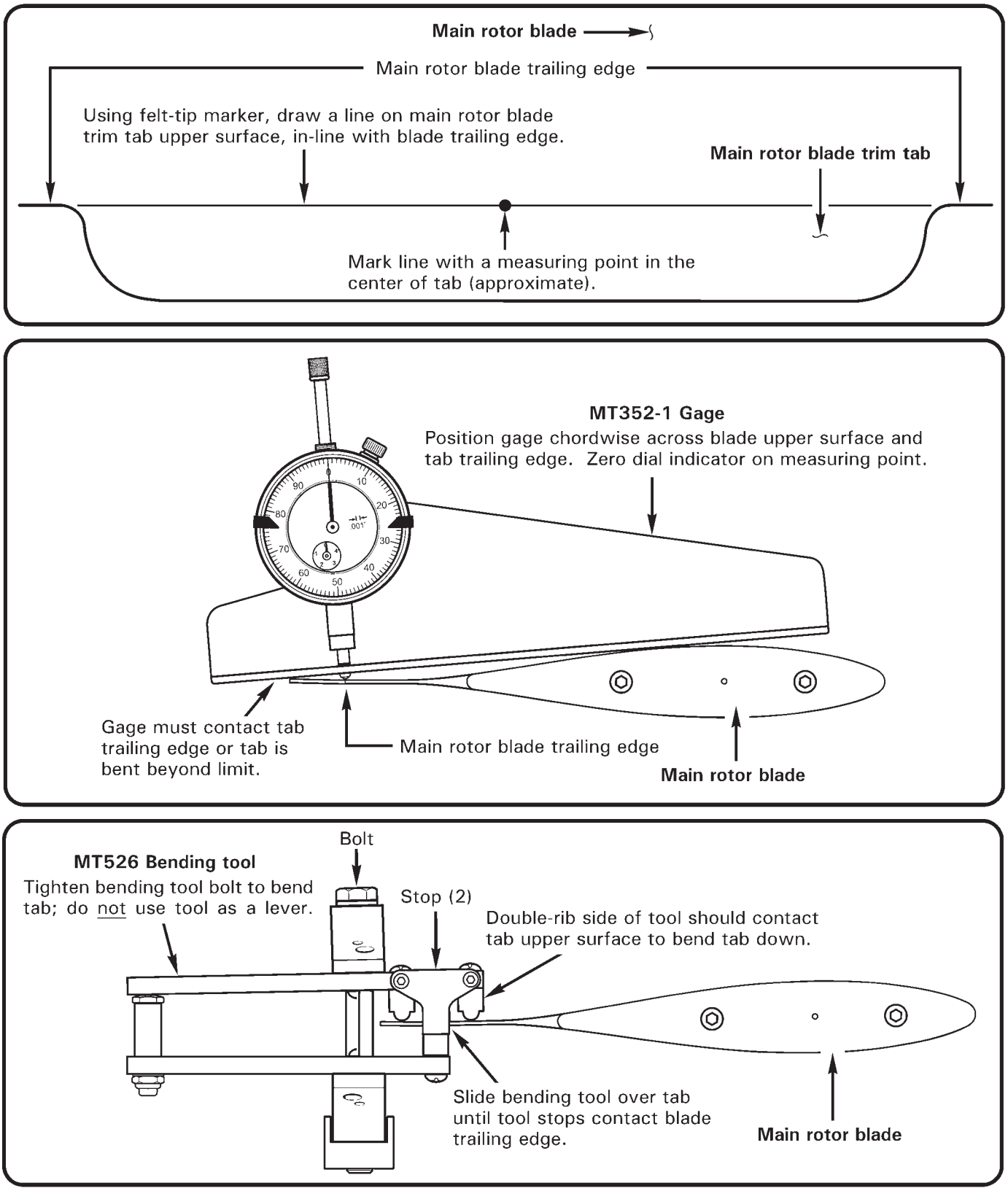

FIGURE 10-12 MAIN ROTOR BLADE TRIM TAB ADJUSTMENT

10.233 Main Rotor Blade Trim Tab Adjustment

NOTE

To correct for a "climbing" blade condition (blade spread that exceeds 3/8 inch with forward airspeed), bend high blade trim tab down.

CAUTION

Do not use other helicopter manufacturers' trim tab bending tools. Use of these tools will damage Robinson blades.

CAUTION

MT352-1 gage must contact trim tab trailing edge. If gage does not contact tab trailing edge, tab is bent beyond limit.

CAUTION

Tighten MT526-1 or MT526-8 trim tab bending tool bolt to bend tab; do not use tool as a lever.

CAUTION

Bend tab upward only when absolutely necessary; bending tab upward can increase rotor vibration.

CAUTION

MT526-1 trim tab bending tool (for A016-4 [stainless steel skin] blades) and MT526-8 trim tab bending tool (for A016-6 [aluminum skin] blades) are not interchangeable. Use of wrong bending tool can result in blade damage. MT090-1 trim tab bending tool (for earlier blades) is obsolete.

1. Using felt tip marker, ink mark main rotor blade trim tab per Figure 10-12. Mark line with a measuring point in the center of the tab (approximate).

2. Position MT352-1 gage chordwise across blade upper surface and tab trailing edge. Zero dial indicator on measuring point.

3. Position MT526-1 (trim tab bending tool (for A016-4 [stainless steel skin] blades) or MT526-8 trim tab bending tool (for A016-6 [aluminum skin] blades) on tab per Figure 10-12. Slide tool completely over tab until tool stops contact blade trailing edge. Double-rib side of tool should contact tab upper surface to bend tab down. Double-rib side of tool should contact tab bottom surface to bend tab up.

4. Tighten MT526 bending tool bolt to bend tab. Make slight bends and re-measure tab with MT352-1 gage. Bend trim tab 0.015 inch (down) to effect dynamic movement of main rotor blade tip approximately 0.2 inch (downward).

Intentionally Blank

10.234 Main Rotor Track and Balance Troubleshooting

The following are some of the symptoms and corrections which occur in the Track and Balance operations of the helicopter. Decide on the various causes of a given trouble and then eliminate causes one by one, beginning with the most probable.

Symptom	Probable Cause	Correction
1. Excessive Cyclic Stick Shake	Main Rotor Out of Track or Balance	Track and Balance with Chadwick-Helmuth Balancing Equipment
	Rough or Binding A205-3 Fork Assy (Upper Swashplate)	Replace or refer to Section 8.6 of Maintenance Manual
	Brinelled Spindle Bearings (rough movement)	RHC replacement of Spindle Bearings
	Blade surface rough (chipped) paint	Feather in rough edges or repaint
	Rough or Binding Pitch Links	Replace pitch link rod ends for smooth operation
	M.R. Blade Boot Misaligned	Replace boot or realign. Boot should show deformation as cyclic and collective are moved through their normal arc or travel.
	M.R. Hub Teeter or Coning Hinge Binding	RHC replacement or rework for smooth operation
	M.R. Blade Trim Tabs Bent Upward	Bend Trim Tabs down evenly
	Blade Match	RHC replacement of blade(s)
2. Excessive Ship Vibration	Main Rotor out of Track and Balance	Track and Balance with Chadwick-Helmuth Balancing Equipment
	M.R. Hub Teeter or Coning Hinge Friction Improperly Adjusted	Refer to Section 9.123 of Maintenance Manual
	Sticky Coning Hinge Bearings in M.R. Hub	RHC replacement or refer to Section 9.123

10.234 Main Rotor Track and Balance Troubleshooting (cont'd)

Symptom	Probable Cause	Correction
2. Excessive Ship Vibration (cont'd)	Brinelled Spindle Bearings (rough movement)	RHC replacement of Spindle Bearing
	Worn Teeter Bearing in M.R. Hub	RHC replacement of M.R. Hub Bearings
3. Excessive Cyclic Stick Forces	Brinelled Spindle Bearings (rough movement)	RHC replacement of Spindle Bearings
	M.R. Blade Trim Tabs Bent Upward	Bend Trim Tabs down evenly
4. Intermittent Blade Track Picture	M.R. Hub Teeter or Coning Hinge Friction Improperly Adjusted	Refer to Section 9.123
	Sticky Coning Hinge Bearings in M.R. Hub	RHC replacement or refer to Section 9.123
	Teeter Hinge not Broken-In	Adjust track to minimize error
	Brinelled Spindle Bearings (rough movement)	RHC replacement of Spindle Bearings
5. Radical Changes to Cylic Trim	Worn Teeter Hinge Bearings in M.R. Hub	RHC replacement of M.R. Hub Bearings
	Brinelled Spindle Bearings (rough movement)	RHC replacement of Spindle Bearings
6. Lateral Intermittent Aircraft Vibration	Engine misfiring due to malfunction in spark-plugs, ignition leads, magneto or engine not broken-in	Refer to Lycoming Maintenance Instructions

10.240 Tail Rotor Balance Procedure

Refer to specific manufacturer's installation instructions when using balancing equipment other than Chadwick-Helmuth 177- or 8350- series Vibrex system.

Install Chadwick-Helmuth equipment per Section 10.222. Set Function Knob on Balancer to appropriate channel. Set balancer RPM Range knob to X10 and set RPM to 340. With helicopter running, with governor ON, view tail rotor assembly with Strobex. Tune Balancer while viewing target tape and adjusting RPM dial on Balancer. Record clock angle and IPS on tail rotor balance chart. Adjust as required until balance is less than 0.2 IPS.

WARNING

Both tail rotor blades must be same part number

Spanwise balance adjustments for A029-1 square-tip blades made by adding, subtracting, or exchanging weights under the removable tip cover. Use A134-1 or -2 tip weights or AN960-8 or -8L washers. -8L washers may be trimmed as a very fine adjustment.

Spanwise balance for A029-2 round-tip blades are made by exchanging different diameter washers under nut securing blade's outboard retaining bolt. The bolt has sufficient length to allow necessary spanwise weight changes; verify 2-4 threads protruding past nut after torquing per Section 1.320.

Chordwise balance is adjusted by adding, subtracting, or exchanging A141-14, A214-3, AN960-416 or -416L washers under nut securing blade's pitch link attaching bolt. Change pitch link, attaching bolt length as required for proper thread engagement (see Section 1.300, refer to IPC for allowable lengths).

A008-2 TAIL ROTOR (WITH A029-1 SQUARE-TIP BLADES) TRACK AND BALANCE CHART

SHIP S/N _____
DATE _____
HOURMETER _____

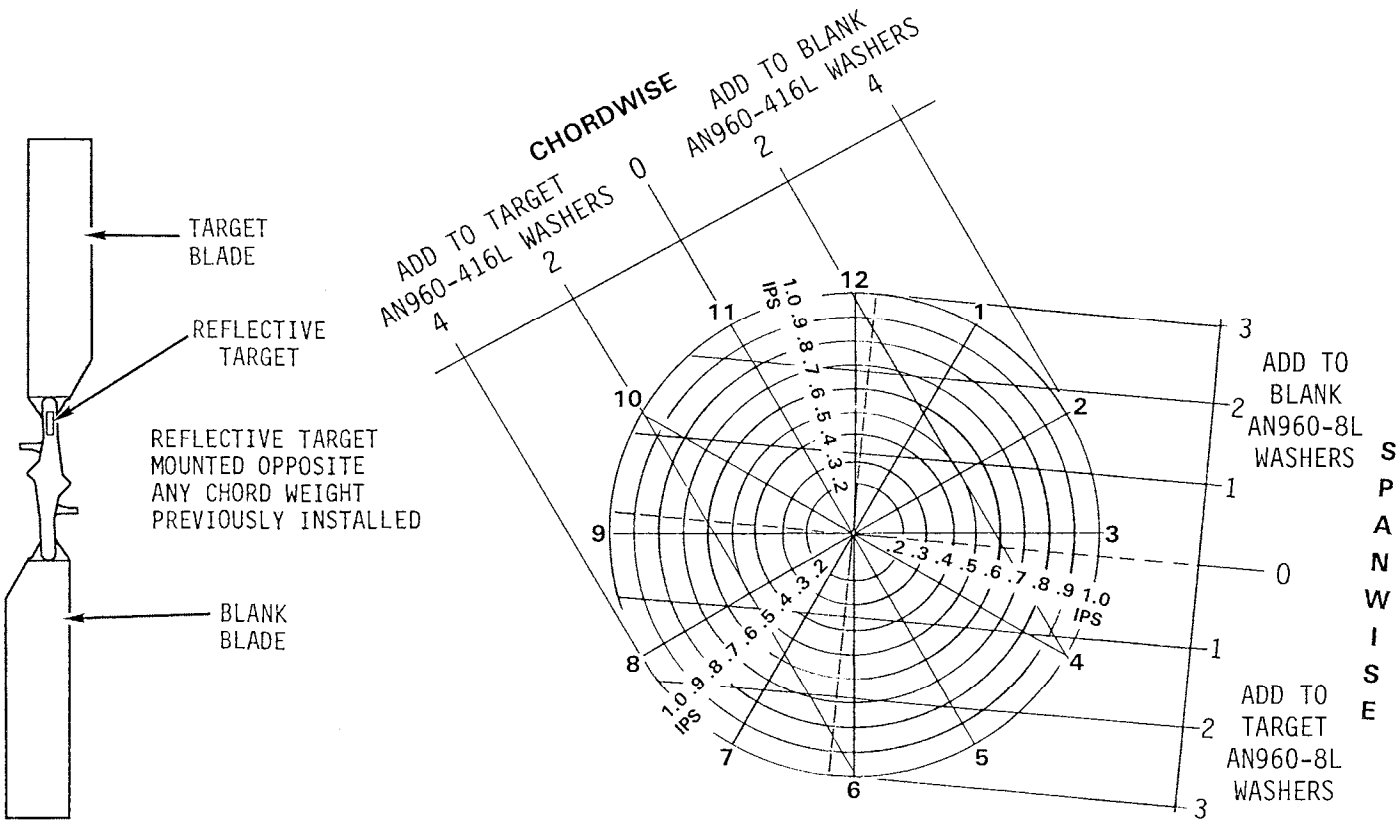

CHORDWISE WEIGHTS

(2)AN960-416L WASHERS = (1)AN960-416 WASHER
(3.5)AN960-416L WASHERS = (1)A214-3 WASHER
(5)AN960-416L WASHERS = (1)A141-14 WASHER

SPANWISE WEIGHTS

(2)AN960-8L WASHERS = (1)AN960-8 WASHER
(8)AN960-8L WASHERS = (1)A134-1 WEIGHT

RUN	CLOCK	IPS	CHANGE MADE BEFORE NEXT RUN

FIGURE 10-14

A008-4 TAIL ROTOR (WITH A029-2 ROUND-TIP BLADES) TRACK AND BALANCE CHART

SHIP S/N _____

DATE _____

HOURMETER _____

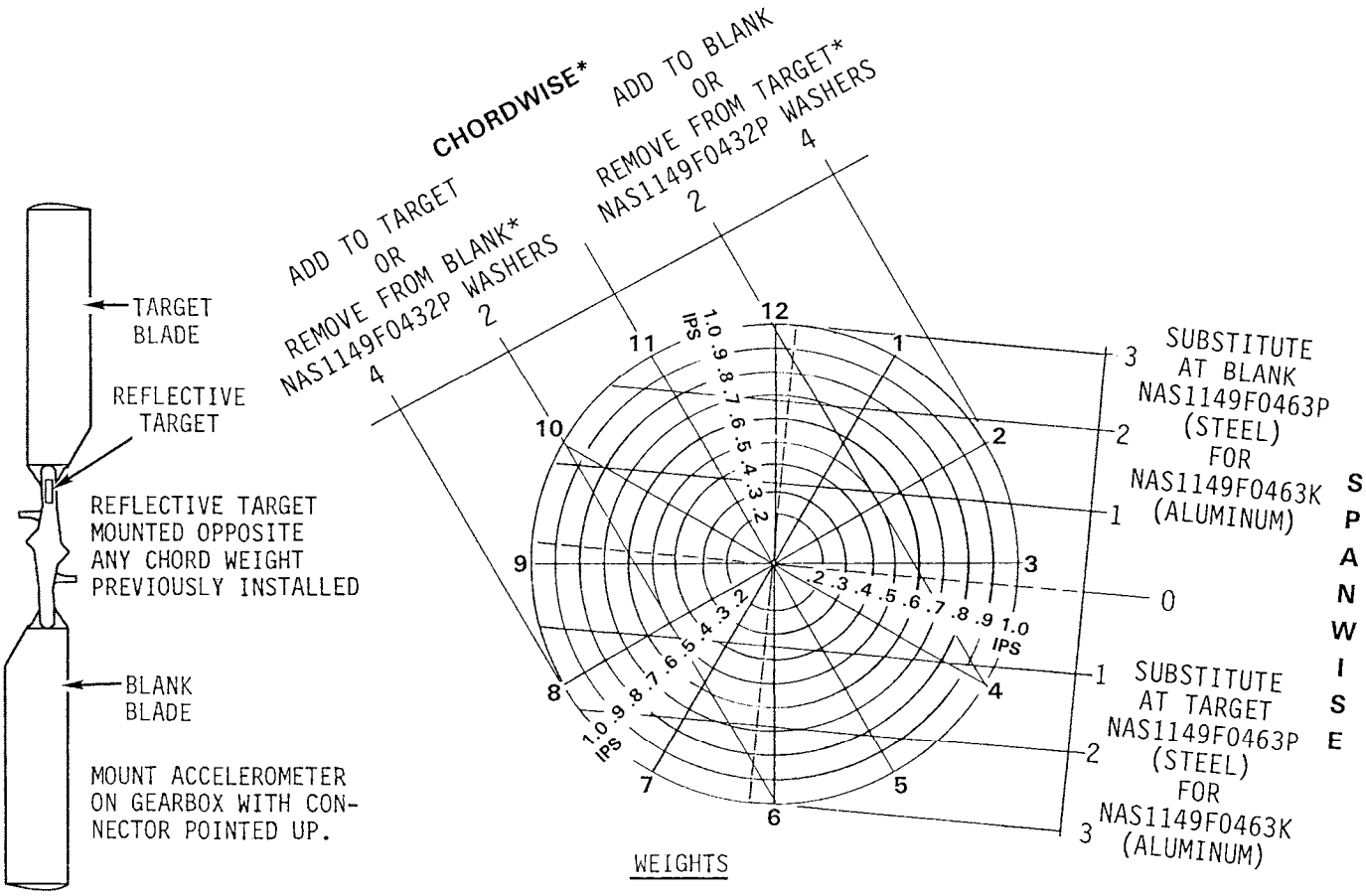

(2)NAS1149F0432P WASHERS = (1)NAS1149F0463P WASHER

(3.5)NAS1149F0432P WASHERS = (1)A214-3 WASHER

(3)NAS1149F0463P WASHERS = (1)A141-14 WASHER

(6.5)NAS1149F0463P WASHERS = (1)AN970-4 WASHER

*A MINIMUM OF ONE NAS1149F0432P WASHER MUST BE INSTALLED IN CHORDWISE LOCATION ON EACH BLADE.

RUN	CLOCK	IPS	CHANGE MADE BEFORE NEXT RUN

FIGURE 10-14A

10.250 Autorotational RPM Adjustment

Use the following procedure for checking and adjusting autorotational RPM:

WARNING

Failure to properly adjust autorotational RPM (RPM too low) may prevent the rotorcraft from achieving proper RPM at low gross weights.

1. Perform autorotation RPM check at minimum practical weight. Calculate the takeoff gross weight of the helicopter. Record the time on the hour meter.

   Take-Off gross weight _____

   Take-Off hourmeter reading _____

2. Set the altimeter to 29.92" Hg (1013.2 millibars) prior to performing the autorotation. Autorotate with the collective control firmly held against the down stop with an airspeed of 50 KIAS.

WARNING

Do not allow the rotor to overspeed when performing autorotation checks. Progressively lengthen both main rotor pitch link rod ends until full down collective can be obtained without over-speeding the rotor.

Take at least 3 RPM readings at 500 to 1000 foot altitude intervals.

Record the following in-flight data:

Test #	Hourmeter Reading	OAT	Pressure Altitude	Test % RPM
1				
2				
3				
4				
5				

10.250 Autorotational RPM Adjustment (cont'd)

3. After each flight, refer to figure 10-15 and determine the following:

Test #	Elapsed Time (in-flight hourmeter reading minus take-off hourmeter reading)	Pounds of Fuel Consumed (elapsed time x 45 lbs/hr)	Test Gross Weight (take-off gross weight minus fuel consumed	Chart % RPM	Test % RPM (from in-flight data)	RPM Correction (chart % RPM minus Test % RPM)
1						
2						
3						
4						
5						

4. Adjust the pitch links based on the average RPM correction required. Lengthen both pitch links to decrease RPM if the test RPM is greater than the chart RPM (lengthening the pitch links one full rod end turn will reduce RPM 3%). Shorten both pitch links to increase RPM. Be sure to adjust both pitch links exactly the same so track will not be affected.

5. Repeat steps (a) through (d) as required until the RPM correction is ± 1% of chart RPM. Determine chart RPM as follows:

   a. Start at outside air temperature, and draw a vertical line up to the pressure altitude.

   b. Draw a horizontal line from the pressure altitude to the rotorcraft gross weight at time of autorotation.

   c. Draw a vertical line down from the gross weight to the required autorotation RPM.

   d. Make adjustment to the main rotor pitch links as required to obtain test autorotation RPM within ± 1% of chart RPM (see Figure 10-15).

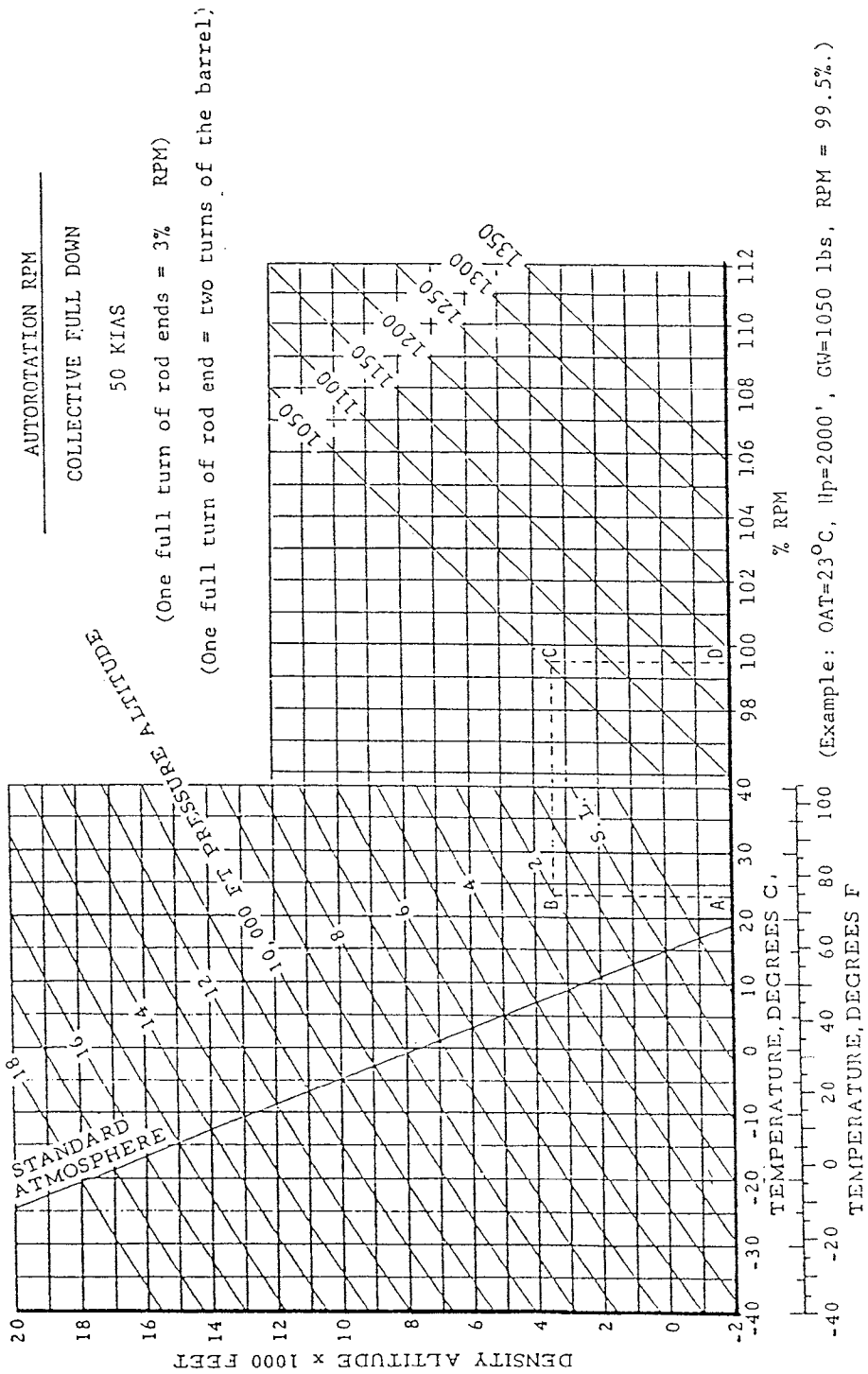
AUTOROTATION RPM
COLLECTIVE FULL DOWN
50 KIAS
(One full turn of rod ends = 3% RPM)
(One full turn of rod end = two turns of the barrel)
PRESSURE ALTITUDE
10,000 FT
STANDARD ATMOSPHERE
DENSITY ALTITUDE x 1000 FEET
TEMPERATURE, DEGREES C
TEMPERATURE, DEGREES F
% RPM
(Example: OAT=23°C, Hp=2000', GW=1050 lbs, RPM = 99.5%.)

FIGURE 10-15

CHAPTER 11

HEATING AND VENTILATION

Section	Title	Page
11.000	Heating and Ventilation	11.1
11.001	Introduction	11.1
11.002	Description	11.1
11.100	Cabin Heater	11.1
11.110	Cabin Heater Removal	11.1
11.120	Cabin Heater Installation	11.2
11.200	Ventilation	11.4
11.210	Cabin Air Vent Removal	11.4
11.220	Cabin Air Vent Installation	11.6
11.230	Door Vent	11.6

Intentionally Blank

CHAPTER 11

HEATING AND VENTILATION

11.000 Heating and Ventilation

11.001 Introduction

This section contains the procedures necessary for removal, installation and replacement of the heater and ventilation systems.

11.002 Description

The cabin heater system consists of an electric blower on left side of the engine compartment, a heat shroud over the muffler, a control valve on the firewall inside the pilot's baggage compartment, and the interconnecting ducts between components. The blower switch and heat control cable are located on the ledge just forward of the pilot's seat. The switch turns the blower on and the heat control actuates a valve which directs the heat either into the cabin or out an overboard discharge on the underside of the cabin.

11.100 Cabin Heater (See Figure 11-1)

11.110 Cabin Heater Removal

a. To remove the electric blower assembly, disconnect the electric power lead at quick disconnect. Disconnect duct from blower housing and cap duct opening. Remove four attaching screws holding blower to side skirt. Remove blower attaching bolt at frame.

b. To remove heater shroud, disconnect duct from heater covers inside pilot's baggage compartment. Disconnect ducts from front and aft of firewall at the valve and cap duct openings. Remove the attaching screws holding the valve assembly and aft inlet to the vertical firewall.

c. To remove heater valve assembly, remove heater covers inside pilot's baggage compartment. Disconnect ducts from front and aft of firewall at the valve and cap duct openings. Remove the attaching screws holding the valve assembly and aft inlet to the vertical firewall.

d. If heater system is to be removed permanently, reinstall exhaust system per § 6.520. Install covers A674-l and A675-1 and seal with RTV102 G.E. Silicone Rubber. Remove the jumper wire from the aft C.B. bus bar. If the wires are disconnected from the switch, they should have heat shrink installed over the terminals and loose wires ty-rapped securely. Remove blower switch and cable and install DP375 and DP437 plug. Remove ducts and insulation.

11.120 Cabin Heater Installation

a. If not already drilled, drill a 2 O.D. inch hole in bottom of right baggage compartment as follows: Drill a #40 hole, 5.30 inches to the right of the keel panel and 1.75 inches forward of the aft firewall. Enlarge hole to 2 O.D. inch diameter using fly cutter.

b. Install the inlet to the back of the vertical firewall and the valve assembly to the front, inside the baggage compartment.

c. If necessary, match drill the attachment holes .170 D from the A625-1 and A753-1 covers into the fuselage.

d. Route the cable through the pre-drilled forward braces and around the upper right side of the baggage compartment. Use 4 each AN742-3 clamps.

NOTE
Install the control cable with the core wire removed to prevent kinks of cable. Tighten clamps securely so cable will not move.

e. Lube inner wire with A257-1 Moly Grease 101 and install cable. Use caution not to kink wire.

f. Install control cable to valve assembly. Adjust cable to give 1/16 inch spring back at full closed position. Cut excess cable approximately 1/2 inch from nut and bend cable 90 degrees to nut.

g. Install the A625-1 box.

h. Install duct hose wrapped in insulation from the cabin outlet to the firewall valve.

i. Temporarily install the heater blower to the side skirt and mark the blower arm through the A020-1 frame assembly. Remove blower and drill .25 O.D. hole in blower arm. Position scoop facing forward on side skirt. Drill .170 D (2 places) top and bottom, if not already drilled.

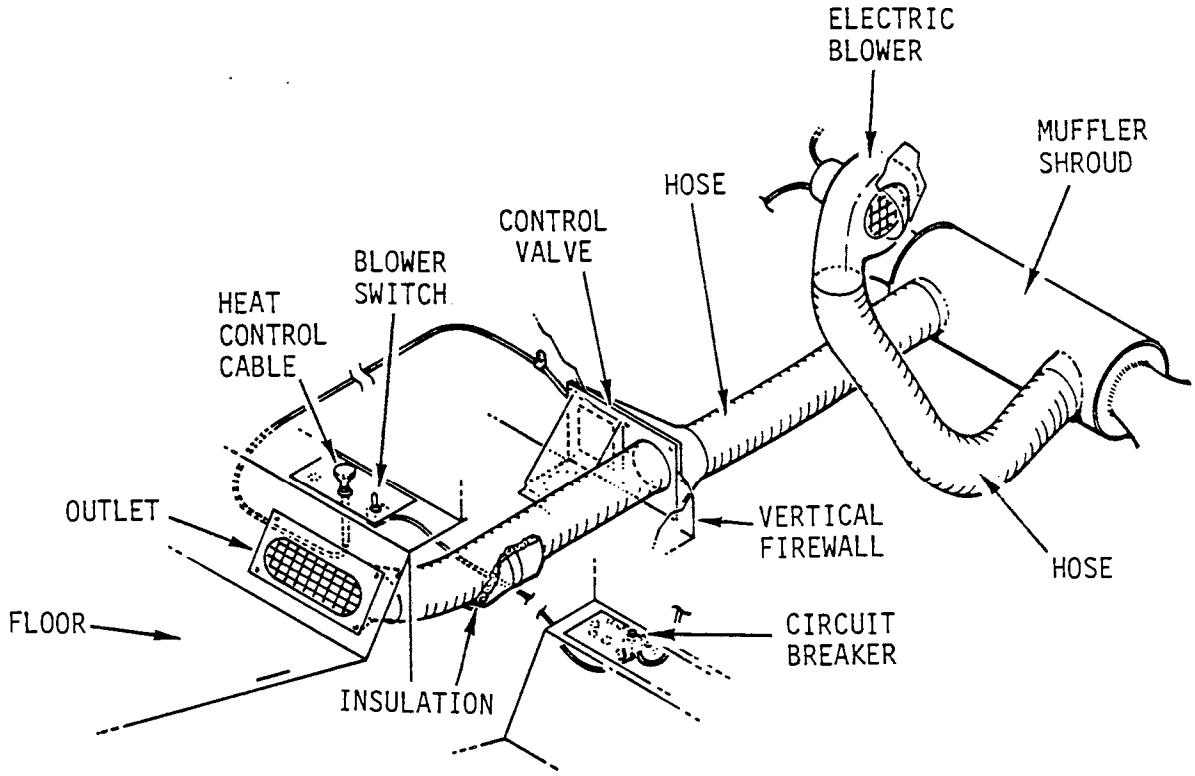

FIGURE 11-1A CABIN HEAT SYSTEM - AFT OUTLET
(S/N 001 Thru 499 except 484)

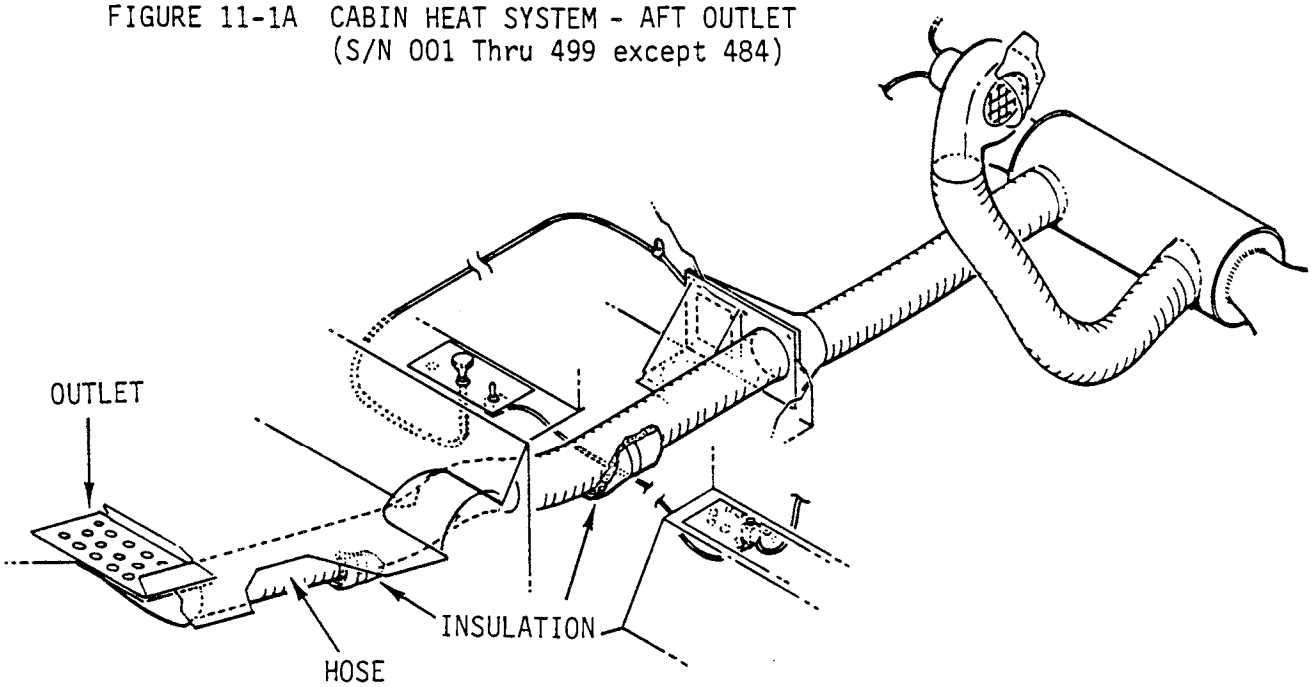

FIGURE 11-1B CABIN HEAT SYSTEM - FORWARD OUTLET
(S/N 484, 500 & On)

FIGURE 11-1 CABIN HEATER

11.120 Cabin Heater Installation (cont'd)

j) Install blower, side scoop and align screen to be positioned horizontally with seam of side skirt.

NOTE

Ensure ground wire and power lead pin are installed before blower installation.

k) Attach blower ground wire terminal (#132) under bolt-head of the blower attaching bolt to frame. Torque attaching bolt.

l) Install heater shroud onto muffler and reinstall muffler per Section 6.520.

m) Install heater ducts from the blower to shroud and the shroud to the valve assembly at the vertical firewall.

n) Install a 10-amp breaker to the circuit breaker assembly. Connect wire (#130) (16 gauge) to the heater breaker and connect a 16 gauge wire (#153) jumper from the aft circuit breaker bus bar to the heater breaker.

o) Install the heater switch on the right side in front of the pilot seat. Connect (16 gauge) wire (#130 and #131) to the heater switch and connect the blower motor to wire (#131) located by the oil pressure sender and low pressure switch.

p) Install the heater duct covers and insulation inside the right baggage compartment.

11.200 VENTILATION

11.210 Cabin Air Vent Removal (See Figure 11-2)

a) Open upper console.

b) Remove battery and battery box.

c) Remove cotter pin and MS20392-2C13 pin at the forward cabin vent.

d) Remove attaching clamps.

e) Remove attaching screws holding cable cover to the console and remove the cable assembly from the ship.

f) Remove the cover from the cable by removing the cable jam nut.

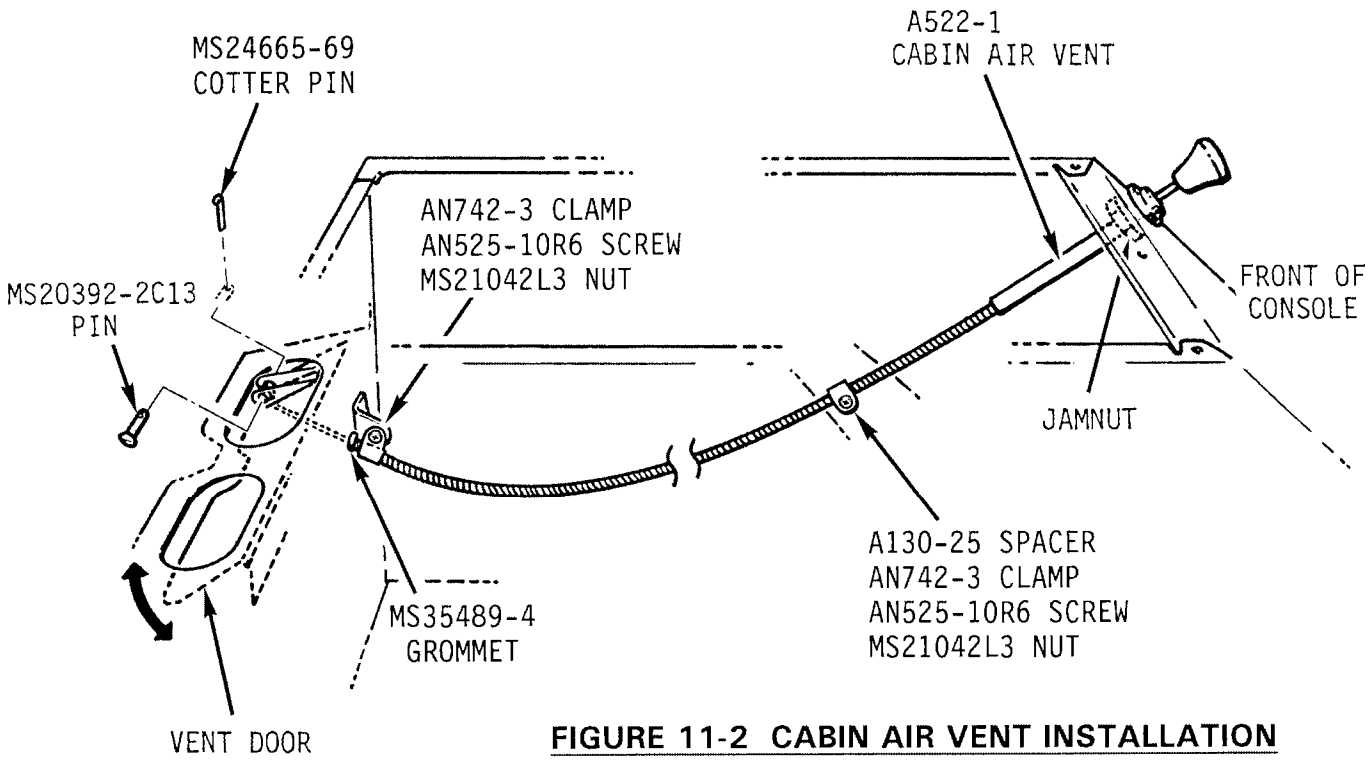

FIGURE 11-2 CABIN AIR VENT INSTALLATION

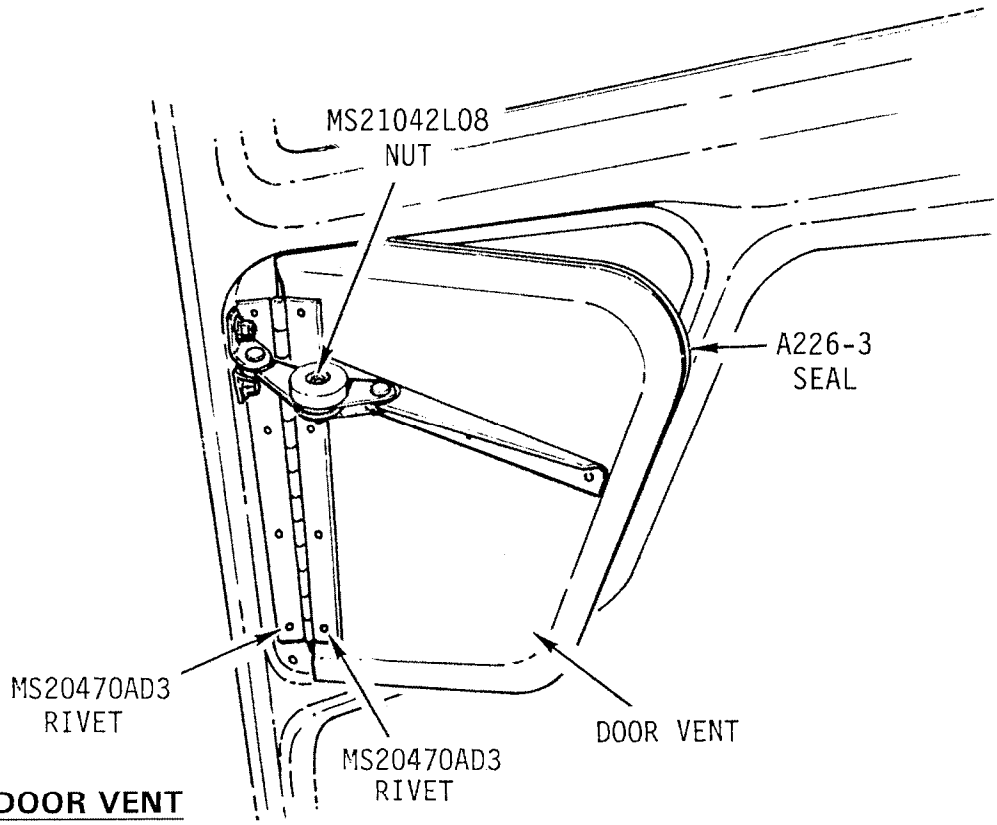

FIGURE 11-3 DOOR VENT

11.220 Cabin Air Vent Cable Installation (See Figure 11-2)

1. Insert A518-1 cover on A522-1 control cable by removing jamnut on A522-1 cable, insert cable through hole in the A518-1 cover and replace jamnut securely on the A522-1 control cable.

2. Insert MS35489-4 grommet in bulkhead.

3. Secure the A522-1 cable to fresh air vents using one MS20392-2C13 clevis pin and one MS24665-73 cotter pin.

4. Attach the A522-1 cable to the right side of console with AN742 clamps, AN525-10R6 screws, AN960-10L washers and NAS679-A3 nuts.

5. Adjust A522-1 cable to insure proper operation of fresh air vent. Then tighten clamps securely to insure cable does not move when operating fresh air vent control knob.

6. Install battery box, battery, and connect battery leads. Secure battery cover and vents.

7. Close and secure upper console.

11.230 Door Vent (See Figure 11-3)

The door vent hinge is riveted in place and can be replaced, if damaged, by drilling out rivets and replacing vent door and/or hinge as required.

Seal on vent door can be replaced if damaged. Use A226-3 seal on hinge side of door and A226-7 seal for other three sides.

The friction can be adjusted on the door vent by tightening MS21042L08 nut holding the knob on the center pivot of double arm linkage.

CHAPTER 12

FUEL SYSTEM

Section	Title	Page
12.000	Description	12.1
12.100	Fuel Tanks	12.3
12.110	Main Tank	12.3
12.120	Auxiliary Tank	12.7
12.200	Fuel Vents	12.11
12.210	(Vent Line) Rollover Valve Assemblies	12.11
12.300	Drain Valves	12.11
12.400	Fuel Quantity	12.13
12.410	Fuel Quantity Senders	12.13
12.420	Fuel Quantity Indication	12.14
12.430	Low-Fuel Switch Assembly	12.15
12.500	Gascolator Assembly	12.16
12.600	Minimum Fuel Flow Check	12.17

Intentionally Blank

CHAPTER 12

FUEL SYSTEM

12.000 Description

Fuel system maintenance is specific to either bladder or all-aluminum tank installations (production aircraft have flexible bladders in aluminum enclosures while earlier aircraft use all-aluminum tanks). Mechanics are advised to identify fuel tank installation type, and to follow the appropriate maintenance procedures. Maintenance procedures for the carburetor or engine fuel system accessories may be found in the appropriate manufacturer's technical data.

The fuel system is gravity-flow (no fuel pumps) and includes a main tank, an auxiliary tank (optional for all-aluminum tanks), a shut-off valve control located behind the left seat, and a strainer (gascolator). Fuel tank air vents are located inside the mast fairing.

Plunger-style drain valves are provided for the gascolator and for each fuel tank sump. The gascolator is located on the lower left side of the firewall. The drain valves for the auxiliary tank and bladder-style main tank are located inside the cowl door below the auxiliary tank. Plastic tubes attached to the valves allow fuel to be drained overboard.

Fuel samples are taken by pushing on the plunger(s). For all-aluminum main tanks, the drain is located on the left side of the fuselage and is opened by pushing in on the plastic tube. Fuel should be sampled from all three locations prior to the first flight of the day and after refueling to verify no contamination and correct grade.

The fuel gages are electrically operated by float-type transmitters in the tanks. When the gages read E the tanks are empty except for a small quantity of unusable fuel. The low fuel caution light is actuated by a separate electric sender located on the bottom of the main tank.

The auxiliary tank is interconnected with the main tank and is located somewhat higher so it will become empty first while fuel still remains in the main tank. The fuel shutoff valve controls flow from both tanks to the engine.

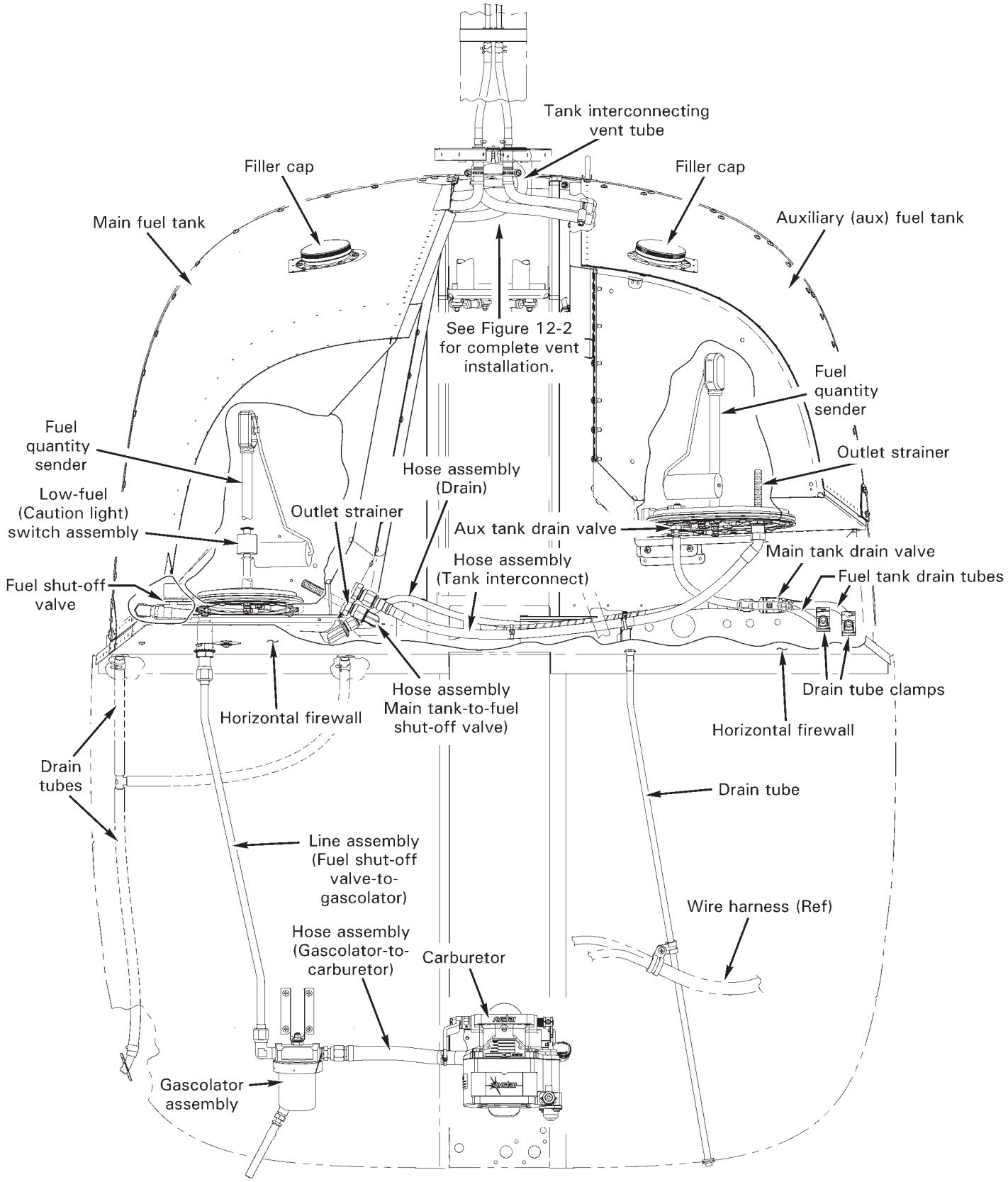

FIGURE 12-1 FUEL SYSTEM (BLADDER TANK INSTALLATION SHOWN)

12.100 Fuel Tanks

CAUTION

Flexible hoses kink easily; handle with care.

CAUTION

Temporarily cap fuel fittings when opened.

WARNING

Fuel vapors are explosive. Do not use electric tools in vicinity of an opened fuel system.

12.110 Main Tank

A. Removal

1. Defuel helicopter per § 1.150.

2. Remove mast fairing. Open access doors, disconnect ELT antenna and ground wire at connectors if ELT is installed, and remove tailcone fairing. Remove B423-1 channel assembly and B429 skins (cowling between tanks).

3. Remove left backrest assembly.

4. Loosen clamps, or cut and discard safety wire, securing vent tubes to main tank assembly and pull tubes off of tank. Remove hardware securing A713-1 strap to tank.

5. Cut and discard ty-raps as required and disconnect fuel quantity sender and low-fuel switch assembly wiring from airframe harness at connectors. Remove nuts securing wiring to fuel quantity sender if connectors are not installed.

6. a. Bladder Tank: Disconnect D205-32 (tank-to-fuel shut-off valve) hose assembly from valve and D205-33 (tank interconnect) hose assembly from aux tank. Cut and discard ty-raps attaching D205-34 (drain) hose assembly and D205-33 hose assembly to support, then disconnect hose from drain valve connector. (Hose assemblies remain attached to main tank during tank removal.)

   b. All-Aluminum Tank: Disconnect A726-2 (tank-to-fuel valve) and B141-1 (tank interconnect; aux tank option) line assemblies and remove line assemblies.

7. Remove hardware securing tank's A028-7 frame (panel) to B428-1 frame (panel) and A020-2 (steel tube) upper frame. Remove hardware securing tank outboard corners to horizontal firewall vertical flange. Remove hardware securing tank forward channel to underside of horizontal firewall (access from engine compartment).

8. Carefully remove tank assembly.

12.110 Main Tank (continued)

B. Installation

> NOTE
>
> When positioning main tank in helicopter, verify vertical strip attached to horizontal firewall is between tank's D249-4 angle (attached to stiffener on bottom of tank) and tank's exterior skin.

> NOTE
>
> Electrically verify proper function of low-fuel warning switch and fuel quantity sender prior to main tank installation. Perform fuel quantity sender check per § 12.410 as required.

1. Bladder Tank: If not previously accomplished, connect D205-32 (tank-to-fuel shut-off valve) hose assembly to main tank strainer assembly, D205-33 (tank interconnect) hose assembly to main tank AN815-6D union, and D205-34 (drain) hose assembly to main tank AN815-4D union. Special torque hose nuts per § 1.330 and torque stripe per Figure 2-1.

2. Position main tank assembly in helicopter, carefully routing attached hose assemblies (bladder tanks) to appropriate locations.

3. Install hardware securing tank outboard corners to horizontal firewall vertical flange. Install hardware securing A713-1 strap to tank. Install hardware securing A028-7 frame (panel) to B428-1 frame (panel) and A020-2 (steel tube) upper frame. Install hardware securing tank forward channel to underside of horizontal firewall (access from engine compartment). Standard torque hardware per § 1.320 and torque stripe per Figure 2-1.

4. a. Bladder Tank: Connect D205-32 hose assembly to fuel valve elbow. Connect D205-33 hose assembly to aux tank strainer assembly. Connect D205-34 hose to drain valve connector. Special torque hose nuts per § 1.330 and torque stripe per Figure 2-1. Install two MS3367-5-9 ty-raps around D205-33 and D205-34 hose assemblies to stand-off ty-rap hoses to support, but do not tighten. Maintain 0.25 in. minimum clearance for D205-33 hose with frame assembly and firewall, and for D205-34 hose with firewall and support. Cinch ty-raps until snug without over-tightening, and trim tips flush with heads.

   b. All-Aluminum Tank: Connect A726-2 (tank-to-fuel shut-off valve) line assembly to tank elbow or tee (aux tank option) and fuel valve elbow. Connect B141-1 line assembly (aux tank option) to aux tank nipple and tank tee. Special torque line nuts per § 1.330 and torque stripe per Figure 2-1.

5. Connect fuel quantity sender and low-fuel switch assembly wiring to airframe harness at connectors. Install nuts securing wiring to fuel quantity sender if connectors are not installed; special torque nuts per § 1.330 and torque stripe per Figure 2-1. Install ty-raps as required.

6. Connect vent tubes to tank and tighten clamps until snug, or wrap two turns 0.032-in. dia. lockwire and safety tubes tight to tank. Verify security.

12.110 Main Tank (continued)

B. Installation (continued)

7. Check fuel quantity indication per § 12.420. Verify no leaks.

8. Inspect fuel cap alignment stripes per R22 Service Bulletin SB-107. Verify proper installation and legibility of D682-44 decals.

9. Install left backrest assembly.

10. Install B423-1 channel assembly, B429 skins (cowlings between tanks), and A706-1 tailcone fairing. Install mast fairing. Connect ELT antenna & ground wire at connectors if ELT is installed. Secure access doors.

11. Perform pitot-static leak check if system was disturbed.

C. Bladder Replacement

NOTE

During disassembly, progressively tape bladder openings to protect interior from foreign object contamination. During assembly, progressively remove protective tape.

CAUTION

B028-1 bladder assembly temperature should be above 65°F before removing, installing, or flexing bladder.

1. Remove main fuel tank per Part A.

2. Remove fuel quantity sender per § 12.410.

3. Remove screws securing D250-6 cover assembly to B028-1 bladder assembly and tank. Carefully remove cover, with low-fuel switch assembly attached. Remove o-ring, and discard if condition warrants.

4. At vents, remove screw securing bladder to tank.

5. At fuel filler neck, remove fuel cap and screws securing bladder to tank.

6. At forward inboard corner, remove B254-3 strainer assembly, AN815-4D union, & AN815-6D union and discard o-rings. Remove screws securing bladder to tank.

7. Remove hardware securing B578-1 bulkhead assembly, B575-4 channel, and B575-5 stiffener to tank. Detach hook-and-loop tape and remove bulkhead.

8. Detach hook and loop tape and carefully remove bladder.

9. Carefully insert new B028-1 bladder assembly inside main tank assembly. Align bladder and tank fastener holes and press hook-and-loop tape together.

10. Install hardware securing B578-1 bulkhead assembly, B575-4 channel, and B575-5 stiffener to tank. Verify security.

12.110 Main Tank (continued)

C. Bladder Replacement (continued)

11. At forward inboard corner, apply A257-9 anti-seize to screw threads and install screws securing bladder to tank. Lubricate new o-rings with A257-6 grease and install o-rings on B254-3 strainer assembly, AN815-4D union, and AN815-6D union. Install strainer and unions; special torque per § 1.330 and torque stripe per Figure 2-1.

12. At fuel filler neck, apply A257-9 anti-seize to screw threads and install screws securing bladder to tank. Install fuel cap.

13. At vents, apply A257-9 anti-seize to screw threads and install screw securing bladder to tank.

14. On bottom, lubricate (new) o-ring with A257-6 grease and install o-ring in bladder ring groove. Carefully insert D250-6 cover into bladder, with attached low-fuel switch assembly. Apply A257-9 anti-seize to threads and install screws securing cover to bladder and tank.

15. Install fuel quantity sender per § 12.410.

16. Pressure check assembled fuel tank by plugging vents and fittings and pressurizing bladder to no more than 1 psi. Check for leaks with a mild soap and water solution applied to all seams.

17. Install main fuel tank per Part B.

12.120 Auxiliary Tank

A. Removal

1. Defuel helicopter per § 1.150.
2. Open right side of mast fairing. Open access doors, disconnect ELT antenna & ground wire at connectors if ELT is installed, and remove tailcone fairing. Remove B423-1 channel assembly and B429 skins. Remove B430 door and skin.
3. Remove right backrest assembly.
4. Loosen clamps, or cut & discard safety wire, securing vent tubes to aux tank assembly and pull tubes off tank. Remove hardware securing pitot-static line clamp to tank channel.
5. Cut & discard ty-raps as required and disconnect fuel quantity sender wiring from airframe harness at connectors. Remove nuts securing wiring to sender if connectors are not installed.
6. Remove hardware securing rotor brake cable assembly to B112-1 lever. Cut & discard heat shrink and disconnect bead chain from cable at connector.
7. Cut & discard ty-rap securing drain tube to angle (bladder tank), or remove hardware securing drain tube clamp to firewall clip.
8. Disconnect hose or line assembly from tank fitting.
9. Bladder Tank: Above right seat, gently lift foam from bulkhead and remove fasteners securing tank to bulkhead.
10. Remove screws securing tank channel to frames.
11. Remove perimeter screws securing tank to bulkhead. Remove tank.

12.120 Auxiliary Tank (continued)

B. Installation

1. Position aux tank assembly in helicopter. Install perimeter screws securing tank to bulkhead.

2. Install screws securing tank channel to frames.

3. Bladder Tank: Above right seat, gently lift foam from bulkhead and install fasteners securing tank to bulkhead.

4. a. Bladder Tank: Connect D205-33 hose assembly to aux tank fitting, special torque hose nut per § 1.330, and torque stripe per Figure 2-1. Verify 0.25 in. minimum clearance with frame assembly and firewall (reposition hose assembly angle as required).

   b. All-Aluminum Tank: Connect B141-1 line assembly to aux tank fitting, special torque line nut per § 1.330, and torque stripe per Figure 2-1.

5. a. Bladder Tank: Install MS3367-5-9 ty-rap securing drain tube to angle. Cinch ty-rap until snug without over-tightening, and trim tip flush with head.

   b. All-Aluminum Tank: Install hardware securing drain tube clamp to firewall clip.

6. Install hardware securing rotor brake cable assembly to B112-1 lever. Slip length of B158-6 heat shrink over rotor brake chain, connect chain and cable, and activate heat shrink over connector. Verify security.

7. Connect fuel quantity sender wiring at connectors. Install nuts securing wiring to fuel quantity sender if connectors are not installed. Install ty-raps as required.

8. a. Bladder Tank: Connect vent tubes to tank and tighten clamps until snug. Verify security.

   b. All-Aluminum Tank: Connect vent tubes to tank, wrap two turns 0.032-in. dia. lockwire and safety tubes tight to tank. Verify security.

9. Install hardware securing pitot-static line clamp to tank channel.

10. Check fuel quantity indication per § 12.420. Verify no leaks.

11. Inspect fuel cap alignment stripes per R22 Service Bulletin SB-107. Verify proper installation and legibility of D682-44 decals.

12. Install right backrest assembly.

13. Install B430 door and skin. Install B423-1 channel assembly and B429 skins. Install tailcone fairing, connect ELT antenna ground wire at connector if ELT is installed, and close access doors. Close right side of mast fairing.

12.120 Auxiliary Tank (continued)

C. Bladder Replacement

NOTE

During disassembly, progressively tape bladder openings to protect interior from foreign object contamination. During assembly, progressively remove protective tape.

CAUTION

B028-2 bladder assembly temperature should be above 65°F before removing, installing, or flexing bladder.

1. Remove aux fuel tank per Part A.
2. Remove fuel quantity sender per § 12.410.
3. Remove screws securing D250-8 cover assembly to B028-2 bladder assembly and tank. Carefully remove cover, with strainer, siphon, and union attached. Remove and discard o-ring.
4. At vents, remove screw securing bladder to tank.
5. At fuel filler neck, remove fuel cap and screws securing bladder to tank.
6. Remove hardware securing B579-1 bulkhead assembly and B577-2 stiffener to tank. Detach hook-and-loop tape and remove bulkhead.
7. Detach hook and loop tape and carefully remove bladder.
8. Carefully insert new B028-2 bladder assembly inside aux tank assembly. Align bladder and tank fastener holes and press hook and loop tape together.
9. Install hardware securing B579-1 bulkhead assembly and B577-2 stiffener to tank. Verify security.
10. At fuel filler neck, apply A257-9 anti-seize to screw threads and install screws securing bladder to tank. Install fuel cap.
11. At vents, apply A257-9 anti-seize to screw threads and install screw securing bladder to tank.
12. Lubricate new o-ring with A257-6 grease and install o-ring in bladder ring groove. Carefully insert cover into bladder, with strainer, siphon, and union attached. Apply A257-9 anti-seize to threads and install screws securing cover to bladder and tank.
13. Install fuel quantity sender per § 12.410.
14. Pressure check assembled fuel tank by plugging vents and fittings and pressurizing bladder to no more than 1 psi. Check for leaks with a mild soap and water solution applied to all seams.
15. Install aux fuel tank per Part B.

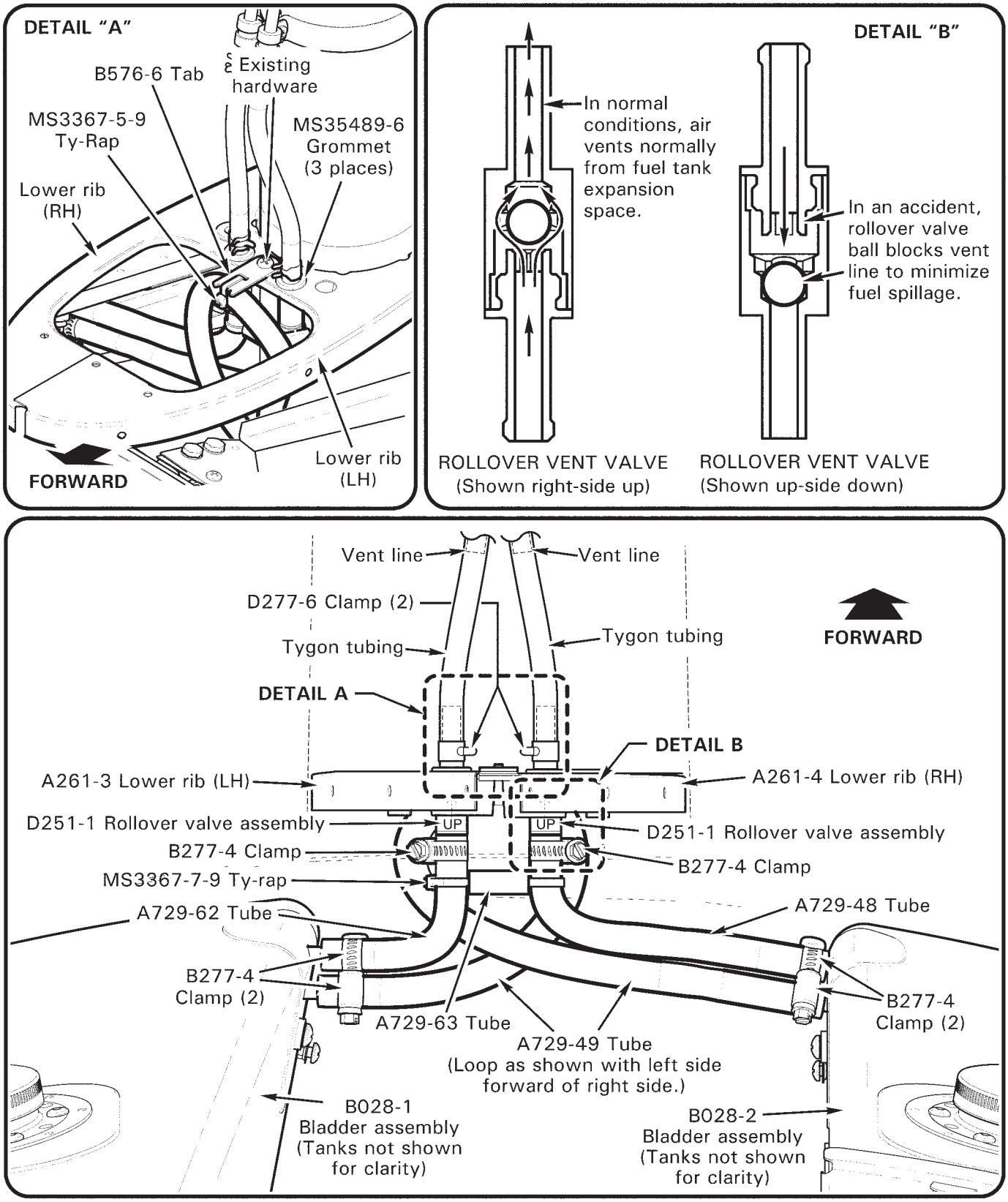

FIGURE 12-2 FUEL VENTS

12.200 Fuel Vents

12.210 (Vent Line) Rollover Valve Assemblies

R22 rollover valves contain one brass ball. In normal conditions, air flows around the vent ball from the bladder expansion spaces. In the event of inadvertent over-filling or in-flight fuel sloshing, the ball will float and seal the vent. If the aircraft is inverted, the ball seals the vent to minimize fuel spillage. There are no internal packings.

A. Removal

1. Open right side of mast fairing.
2. Above lower rib, remove D277-6 (spring) clamp securing A729-61 tube to D251-1 rollover valve assembly and pull tube off of valve. Pull valve downward, through rib grommet.
3. Loosen B277-4 (worm gear) clamp securing A729-48 or A729-62 tube to rollover valve and pull tube off of valve.

B. Installation

1. Observe orientation markings and push A729-48 or A729-62 tube onto D251-1 rollover valve assembly and tighten B277-4 (worm gear) clamp. Push valve upward, through lower rib grommet.
2. Above rib, push A729-61 tube onto rollover valve and install D277-6 (spring) clamp. Verify security.
3. Perform vent system check per Part C.

C. Vent System Check

1. Open right side of mast fairing. Verify main and aux fuel tank caps are installed.
2. Attach temporary hose to one A731-4 (vent) tube.
3. Blow into the temporary hose (do not use compressed air) and verify air blows out the other vent tube. If air does not blow out the other vent, remove obstruction(s) and repeat check.
4. Close mast fairing.

12.300 Drain Valves

A. Removal

1. Defuel helicopter per § 1.150. Remove engine right cowling, as required.
2. Cut & discard safety wire securing A729 tube to A761-1 drain valve, if installed, and pull tube off of valve.
3. Remove valve from connector, tank, or gascolator assembly. Tape fuel system opening.
4. Actuate valve to expose stem, then remove & discard o-ring.

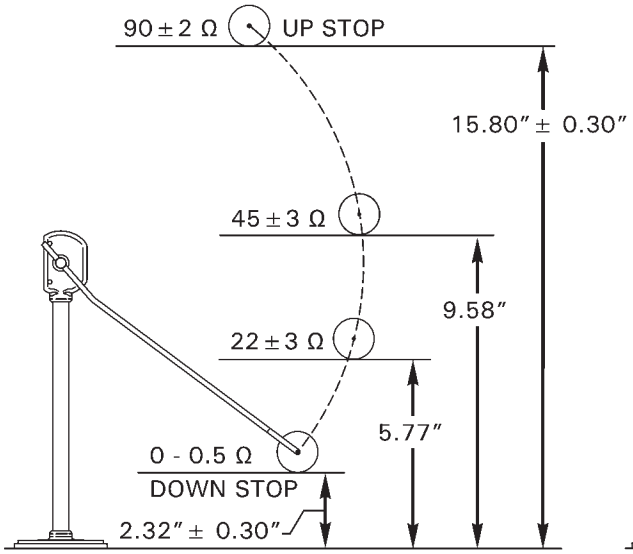

D252-3 FUEL QUANTITY SENDER
Main Tank (Bladder Tank)

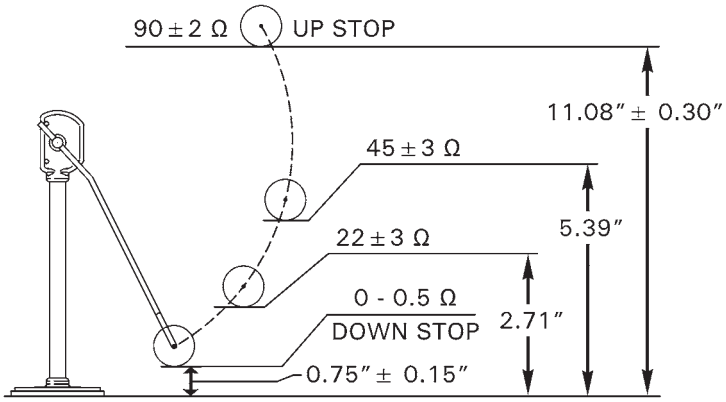

D252-4 FUEL QUANTITY SENDER
Aux Tank (Bladder Tank)

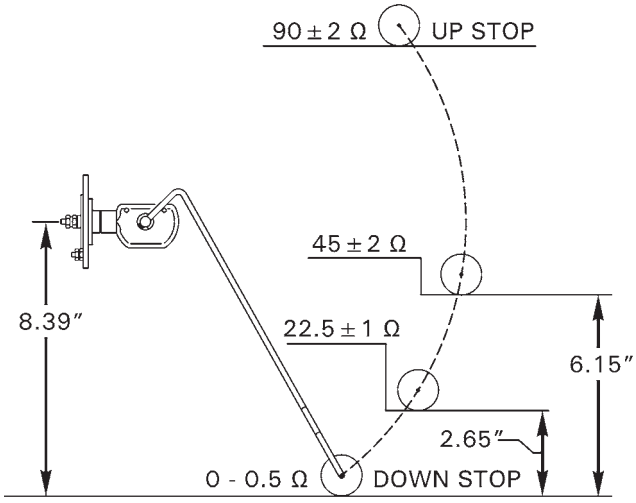

A550-1 FUEL QUANTITY SENDER
Main Tank (All-Aluminum Tank)

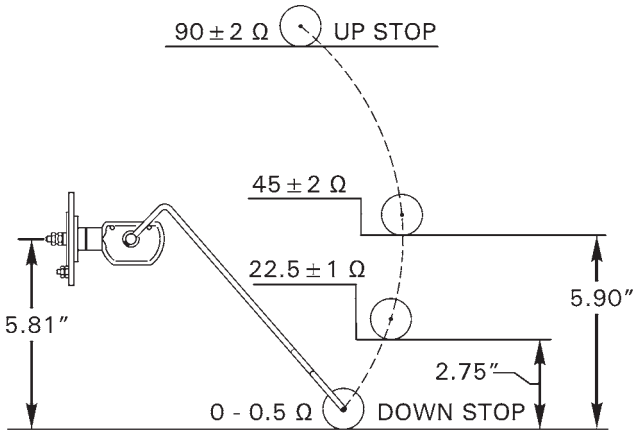

B122-1 FUEL QUANTITY SENDER
Aux Tank (All-Aluminum Tank)

FIGURE 12-3 FUEL QUANTITY SENDER CHECK

12.300 Drain Valves (continued)

B. Installation

1. Actuate A761-1 drain valve to expose stem, and install new o-ring in stem seat.

2. Lightly coat valve threads using B270-6 sealant. Remove tape and install valve in connector, tank, or gascolator assembly. Standard torque valve per § 1.320 and torque stripe per Figure 5-1.

3. Push A729 tube onto valve. Wrap tube with two turns 0.032-inch diameter lockwire and safety tube to valve, as required.

4. Fuel helicopter per R22 Pilot's Operating Handbook Section 2 and inspect fuel system for leaks. Install engine right cowling, if removed.

12.400 Fuel Quantity

12.410 Fuel Quantity Senders

A. Removal

1. a. Bladder Tanks: If removing D252-3 fuel quantity sender, remove main fuel tank per § 12.110. If removing D252-4 fuel quantity sender, defuel helicopter per § 1.150.

   b. All-Aluminum Tanks: Defuel helicopter per § 1.150 until level is below fuel quantity sender mounting hole. Cut & discard ty-raps as required and disconnect sender wiring from airframe harness at connectors. Remove nuts securing wiring to sender if connectors are not installed.

2. Remove hardware securing fuel quantity sender to cover assembly or tank. Carefully pull sender lever through opening, then tape opening.

B. Installation

1. Perform fuel quantity sender check per Part C.

2. Inspect condition of sender gasket and replace as required. Remove tape from opening, position gasket on sender, and carefully insert sender lever through opening. Install hardware, special torque bolts in criss-cross pattern per § 1.330, and torque stripe per Figure 2-1.

3. Bladder Tanks: If removed, install main fuel tank per § 12.110.

4. Connect sender wiring to airframe harness at connectors. Install nuts securing wiring to sender if connectors are not installed. Install ty-raps as required.

5. Check fuel quantity indication per § 12.420. Verify no leaks.

12.410 Fuel Quantity Senders (continued)

C. Check

1. Remove fuel quantity sender per Part A.

2. Simulate mounting position of appropriate sender per Figure 12-3. Position float arm as shown and measure the resistance with a multimeter. Verify resistance is within tolerance in the four positions given.

3. If resistance is out of tolerance at any of the four positions given, bend the float arm up for a sender with excessive resistance, or bend the float arm down for a sender with too little resistance. Repeat steps until sender resistance is within tolerance.

4. Install fuel quantity sender per Part B.

12.420 Fuel Quantity Indication

1. Defuel helicopter per § 1.150. Turn fuel shut-off valve off.

2. Fuel main tank with exactly 6.2 gallons (bladder tanks) or 5.0 gallons (all-aluminum tanks, aux tank only) of fuel per R22 Pilot's Operating Handbook Section 2. Wait five minutes for fuel levels to equalize. Inspect for leaks.

3. Turn battery switch on and read fuel quantity gage. Verify fuel gage indicates one half to one and one half needle-widths below a quarter of a tank, as shown in Figure 12-3.

4. If indication is beyond allowable limit, perform fuel quantity sender check per § 12.410. If sender resistance is within tolerance, adjust fuel gage per § 14.440, or replace fuel gage as required and repeat check.

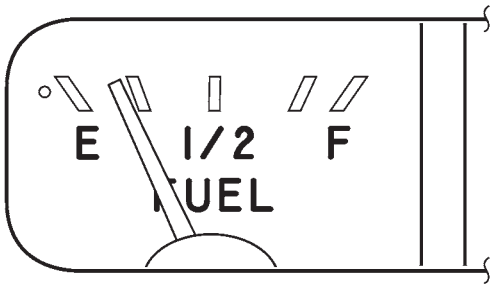

Main Tank Gage

MINIMUM ALLOWABLE INDICATION

1 ½ Needle-widths below ¼ of a tank

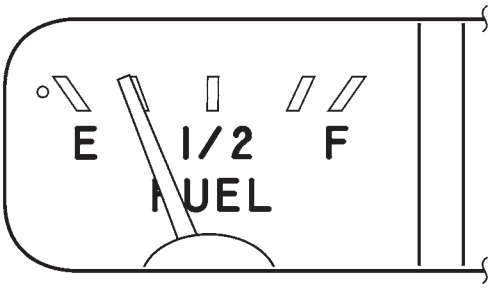

Main Tank Gage

MAXIMUM ALLOWABLE INDICATION

½ Needle-width below ¼ of a tank

FIGURE 12-3 FUEL QUANTITY INDICATION CHECK

12.430 Low-Fuel Switch Assembly

CAUTION

Avoid contaminating fuel bladder or tank interior. Cover arms with sleeves and use lint-free gloves when working inside interior.

A. Removal

1. Remove main fuel tank per § 12.110.
2. Remove A521 low-fuel switch assembly wiring pins from connector housing.
3. Remove fuel cap. Carefully capture switch assembly body with clean mechanical fingers (avoid capturing movable float). Remove AN924-5D nut securing switch assembly to cover or tank.
4. Carefully pull switch assembly through fuel cap opening, avoiding fuel quantity sender. Install fuel cap, and tape fuel bladder or tank opening.

B. Installation

1. Lubricate new o-ring with A257-6 grease, and install o-ring over A521 low-fuel switch assembly threads.
2. Tape switch assembly wiring to 30-inch length of lockwire.
3. Remove fuel cap and tape. Position tank upside down. Thread lockwire through fuel cap opening and switch assembly mounting hole. Pull switch assembly wires and threads through mounting plate and retaining nut.
4. Apply light coat B270-1 sealant to mating face of AN924-5D nut and install nut securing switch assembly to cover or tank. Special torque nut per § 1.330 and torque stripe per Figure 2-1.
5. Install main fuel tank per § 12.110.
6. Perform operation check per Part C.

C. Operation Check

1. Turn battery switch on. Fuel helicopter per R22 Pilot's Operating Handbook Section 2 as required and inspect fuel system for leaks.
2. With a clean wooden dowel, gently depress low-fuel switch assembly float and verify low fuel warning light illuminates after approximately 1 second delay.
3. If warning light does not illuminate when float is depressed, but does illuminate when activating push-to-test switch, replace switch assembly.

12.500 Gascolator Assembly

A. Cleaning Sediment Bowl

1. Turn battery switch off. Turn fuel shut-off valve off. Remove left side skirts. Electrically ground helicopter. Drain fuel into an approved, electrically-grounded container using A666-1 gascolator assembly drain valve.

2. Cut & discard safety wire securing gascolator collar to outlet fitting. Unscrew collar, and remove collar, ring, and sediment bowl.

3. Remove gasket and screen from gascolator top. Inspect, then clean, sediment bowl and screen.

4. Install screen and gasket in gascolator top. Apply light coat A257-6 grease to collar threads and collar inner flange. Verify large diameter of ring contacts collar inner flange. Slide ring and collar over bottom of sediment bowl so small diameter of ring engages groove in bowl flange. Position sediment bowl drain valve thru hole in belly panel, and hand-tighten collar, ring, and bowl onto gascolator top until snug. Verify no threads exposed in gascolator top. Safety collar to outlet adapter using 0.032-inch diameter lockwire.

5. Turn fuel shut-off valve on. Perform ground check and run up per §§ 2.205 & 2.210. Verify no leaks; repair as required. Install left side skirts.

12.600 Minimum Fuel Flow Check

1. Turn battery switch off. Turn fuel shut-off valve off. Electrically ground helicopter. Remove right side skirts. Verify fuel tank cap(s) are installed.

2. Fuel main tank with exactly 3.0 gallons (bladder tanks) or 1.7 gallons (all-aluminum tanks) fuel per R22 Pilot's Operating Handbook Section 2.

3. Disconnect B283 hose assembly from carburetor, turn battery switch and fuel shut-off valve on, and defuel helicopter into an approved, electrically-grounded container until low fuel light illuminates. Turn battery switch and fuel shut-off valve off.

4. Place electrically-grounded, calibrated container beneath hose, turn fuel shut-off valve on, and record time required to fill container. Verify filling time does not exceed maximum time listed below:

ALLOWABLE FUEL FLOW RATE	
QUANTITY	*MAXIMUM TIME*
1 U.S. Gallon	2 minutes 25 seconds
4 Liters	2 minutes 33 seconds
1 Imperial Gallon	2 minutes 54 seconds

5. If filling time is exceeded, perform vent system check per § 12.210. Inspect fuel tank outlet strainer, line assembly, and hose assemblies for obstructions. Remove obstructions and repeat check.

6. Connect B283 hose assembly to carburetor, special torque nut per § 1.330, and torque stripe per Figure 2-1.

7. Perform ground check and run up per §§ 2.205 & 2.210. Verify no leaks. Install right side skirts.

Intentionally Blank

CHAPTER 13

INSTRUMENTS

Section	Title	Page
13.000	Description	13.1
13.100	Pitot-Static System	13.3
13.200	Primary Instruments	13.4
13.210	Vertical Speed Indicator	13.4
13.220	Airspeed Indicator	13.4
13.230	Engine and Rotor Dual Tachometer	13.4
13.240	Altimeter	13.4
13.250	Manifold Pressure Gage	13.5
13.260	Magnetic Compass	13.5
13.300	Engine Gages	13.5
13.310	Ammeter	13.5
13.320	Engine Oil Pressure Gage	13.5
13.330	Engine Oil Temperature Gage	13.5
13.340	Cylinder Head Temperature Gage	13.5
13.350	Fuel Quantity Gages	13.6
13.360	Carburetor Air Temperature Gage	13.6
13.400	Additional Standard Indicating Equipment	13.6
13.410	Clock	13.6
13.420	Outside Air Temperature (OAT) Gage/Voltmeter	13.6
13.430	Hourmeter	13.6
13.500	Optional Equipment	13.9
13.510	Aspen PFD Installation	13.9
13.600	Instrument Markings	13.11
13.700	Troubleshooting	13.11

Intentionally Blank

CHAPTER 13

INSTRUMENTS

13.000 Description

Standard primary instruments include an airspeed indicator, engine and rotor dual tachometer, altimeter, manifold pressure gage, and magnetic compass. Engine gages include an ammeter, oil pressure, oil temperature, cylinder head temperature, and fuel quantity for main and aux (if installed) tanks. Also standard are a clock, a carburetor air temperature gage, and a digital outside air temperature gage. An hourmeter actuated by engine oil pressure is located on the ledge just forward of the pilot's seat.

The pitot-static system supplies air pressure to operate the airspeed indicator, altimeter, and vertical speed indicator. The pitot tube is located on the front edge of the mast fairing. The static source is located inside the aft cowling inboard of the cowl door hinge.

Water can be drained from pitot-static lines by removing the plastic drain plugs which are accessible through the inspection panel on the underside of the cabin. Draining lines should only be required if the airspeed indicator or altimeter appears erratic.

Pitot and static sources should be inspected frequently for bugs or other obstructions.

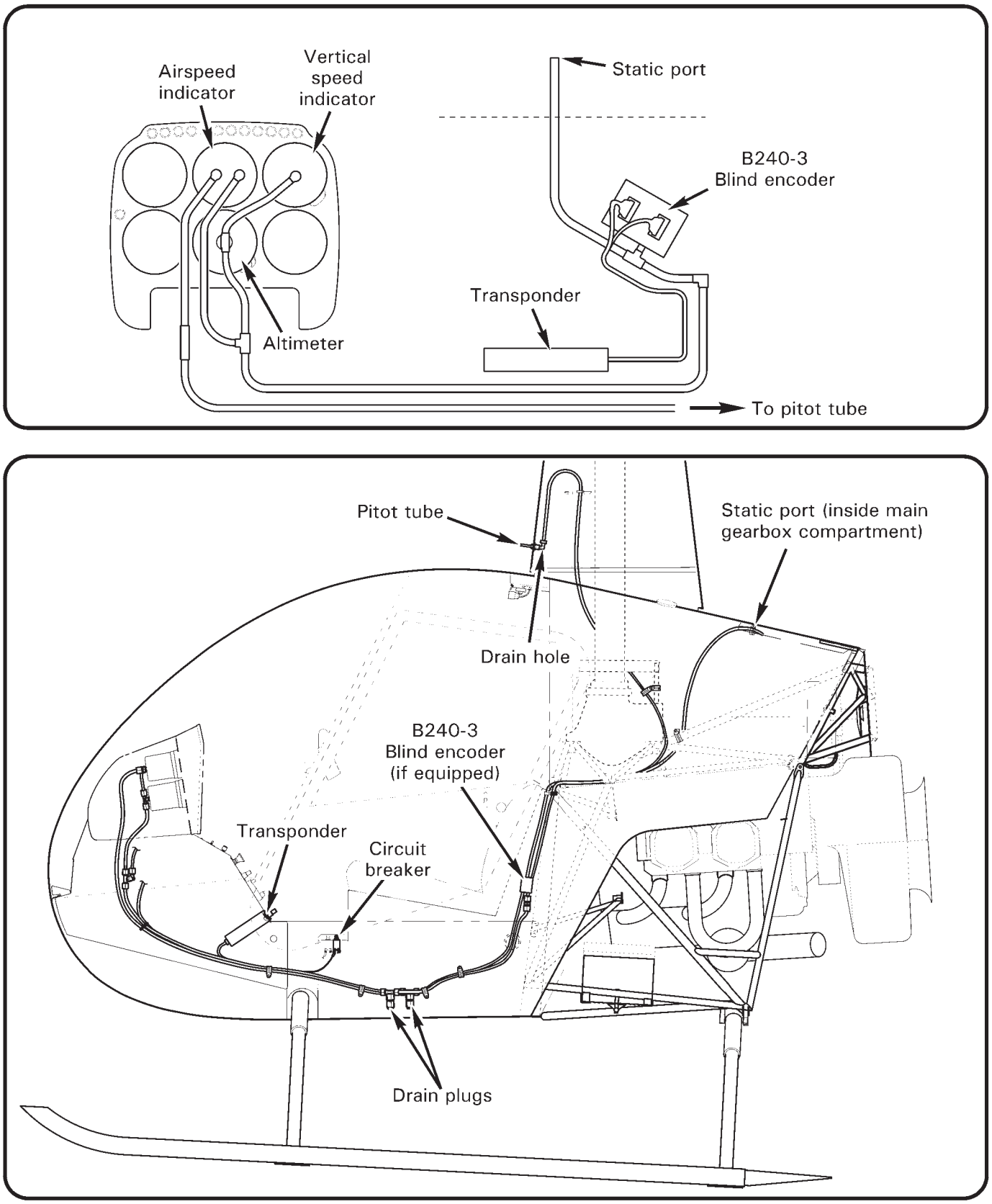

FIGURE 13-1 PITOT-STATIC SYSTEM

13.100 Pitot-Static System

CAUTION

Do not apply suction to pitot system or pressure to static system.

A. Pitot System Leak Test

1. Open mast fairing.
2. Refer to Figure 13-1. Seal drain hole in elbow aft of pitot tube with pressure-sensitive tape. Connect a medical syringe, with plunger withdrawn, to pitot tube via flexible tubing.
3. Slowly apply pressure to pitot line by depressing syringe plunger until airspeed indicator reads 70 knots (plunger will remain in place).
4. Gently tap airspeed indicator glass to remove friction effects.
5. If airspeed indication drops more than 10 knots in one minute, an unacceptable leak is indicated. Slowly release pressure. Locate and repair any leak(s). Retest after any repairs.
6. Remove tape from pitot tube drain hole and verify airspeed indicator has returned to zero.
7. Remove test equipment. Close mast fairing.

B. Static System Leak Test

CAUTION

Airspeed indicator, altimeter, and vertical speed indicator may be damaged if suction to static line is applied or removed rapidly.

1. Refer to Figure 13-1. Set altimeter to location elevation.
2. Connect a medical syringe, with plunger depressed, to static port tube via flexible tubing.
3. Slowly apply suction to static port by withdrawing syringe plunger until altimeter indicates 500 feet greater than location elevation (plunger will remain in place).
4. If altimeter indication drops more than 100 feet in one minute, an unacceptable leak is indicated. Slowly release suction. Locate and repair leak(s). Retest after any repairs.
5. Remove test equipment.

13.200 Primary Instruments

13.210 Vertical Speed Indicator

The vertical speed indicator indicates rate of ascent or descent. Check vertical speed indicator for a zero-rate needle indication when rotorcraft is in a stationary hover.

13.220 Airspeed Indicator

The airspeed indicator displays airspeed in knots and miles per hour. The airspeed indicator operates properly in forward flight only; backward or lateral flight will not indicate correct airspeed. The airspeed indicator will indicate airspeeds up to a maximum of 102 knots (red line).

13.230 Engine and Rotor Dual Tachometer

CAUTION

Installation of electrical devices can affect accuracy and reliability of electronic tachometers.

An electronic engine and rotor dual tachometer is standard. Engine tachometer signal is provided by magneto breaker points. Rotor tachometer signal is provided by two magnetic senders at the main gearbox drive yoke. Each tachometer is on a separate circuit with its own circuit breaker. With battery and alternator switches off, the tachometers continue to receive power from the battery through a bypass circuit as long as the clutch actuator switch is in the engage position.

A. Adjustment

NOTE

Adjust rotor tachometer if engine and rotor tachometer needles are not within 1% of each other at 104% RPM.

1. Remove screws securing instrument face panel to upper console and carefully pull panel aft.

2. Run-up helicopter per R22 Pilot's Operating Handbook (POH) Section 6 at 104% engine tachometer indication.

3. Turn adjustment screw on back of tachometer (apply 1/8 turns) clockwise to increase and counterclockwise to decrease rotor tachometer indication. Adjust rotor tachometer to indicate 104%.

4. Shutdown helicopter per POH Section 6. Tighten screws securing instrument panel to upper console.

13.240 Altimeter

The sensitive altimeter provides altitude information relative to mean sea level when the barometric pressure correction scale is properly set. Check altimeter calibration by setting correction scale to the current altimeter setting and checking the altimeter reading against field elevation; they must agree within 70 feet.

13.250 Manifold Pressure Gage

The manifold pressure gage provides an indicator of absolute air pressure in the engine intake manifold. The red line on the gage indicates the maximum manifold pressure that the rotorcraft is type certificated for at 104% rotor RPM. The manifold pressure gage should indicate within 0.3 inches Hg of ambient barometric pressure when engine is not running.

A. Manifold Pressure System Leak Check

1. Disconnect A740-1 line assembly from engine fitting.
2. Connect a medical syringe, with plunger depressed, to line assembly fitting via flexible tubing.
3. Slowly apply suction to system by withdrawing syringe plunger until manifold pressure gage indicates 10 inches Hg (plunger will remain in place).
4. If manifold pressure gage indication rises more than one inch in one minute, an unacceptable leak is indicated. Slowly release suction. Locate and repair leak(s). Retest after any repairs.
5. Remove test equipment.

13.260 Magnetic Compass

An internally illuminated, wet-type compass is attached to the center bow between the windshields above the instrument panel. A compass correction card is aft of the windshield above the pilot's seat.

13.300 Engine Gages

13.310 Ammeter

The ammeter indicates electrical system loads. System load is measured at the shunt located on the lower-left side of the vertical firewall in the engine compartment.

13.320 Engine Oil Pressure Gage

The engine oil pressure gage indicates engine oil pressure and receives its signal from a variable-resistor-type sender located in left-hand forward corner of engine compartment next to hourmeter pressure switch.

13.330 Engine Oil Temperature Gage

The engine oil temperature gage indicates engine oil temperature and receives its signal from a probe mounted in engine oil pressure screen housing or oil filter adapter.

13.340 Cylinder Head Temperature Gage

The cylinder head temperature gage indicates the temperature of the #4 cylinder and receives its signal from a thermocouple installed in the #4 cylinder head.

13.350 Fuel Quantity Gages

The fuel quantity gages indicate the fuel level of main and aux (if installed) fuel tanks and receive signals from variable resistance type senders mounted on the bottom of each tank.

13.360 Carburetor Air Temperature Gage

The carburetor air temperature gage is used to determine when carburetor heat is required during possible carburetor icing conditions, such as high humidity. Apply heat as required to keep needle out of yellow band. The carburetor air temperature gage should read approximately the same as the OAT gage when engine is cold.

13.400 Additional Standard Indicating Equipment

13.410 Clock

A manually set electric analog clock is standard equipment.

13.420 Outside Air Temperature (OAT) Gage/Voltmeter

NOTE

No cutting or splicing of OAT probe wires is permitted.

The outside air temperature indicator has a stainless steel probe protruding from chin of rotorcraft and is connected to gage by a calibrated length of cable.

13.430 Hourmeter

An hourmeter actuated by engine oil pressure is located on the ledge just forward of the pilot's seat.

Intentionally Blank

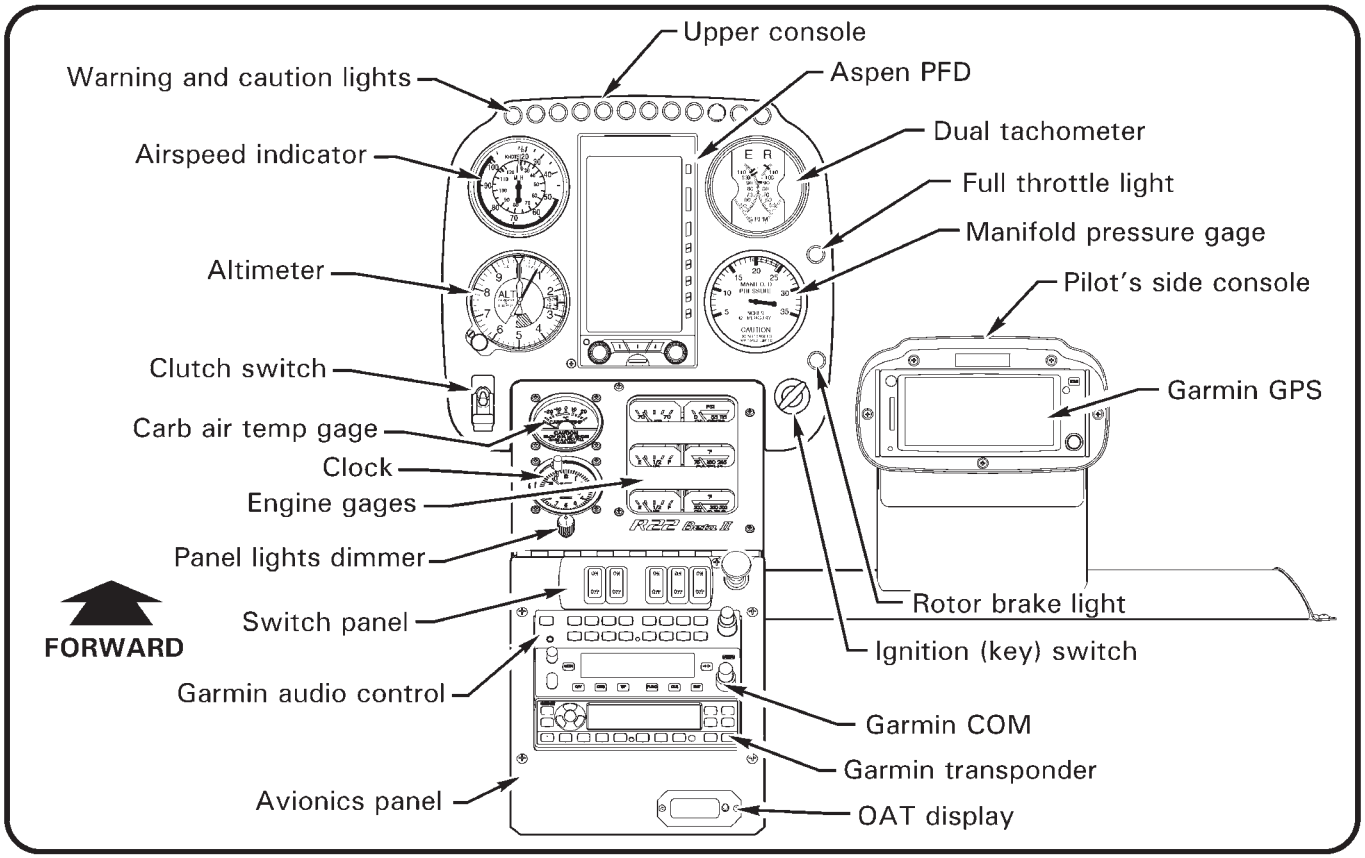

FIGURE 13-2 SIX-INSTRUMENT CONSOLE WITH ASPEN PFD – TYPICAL

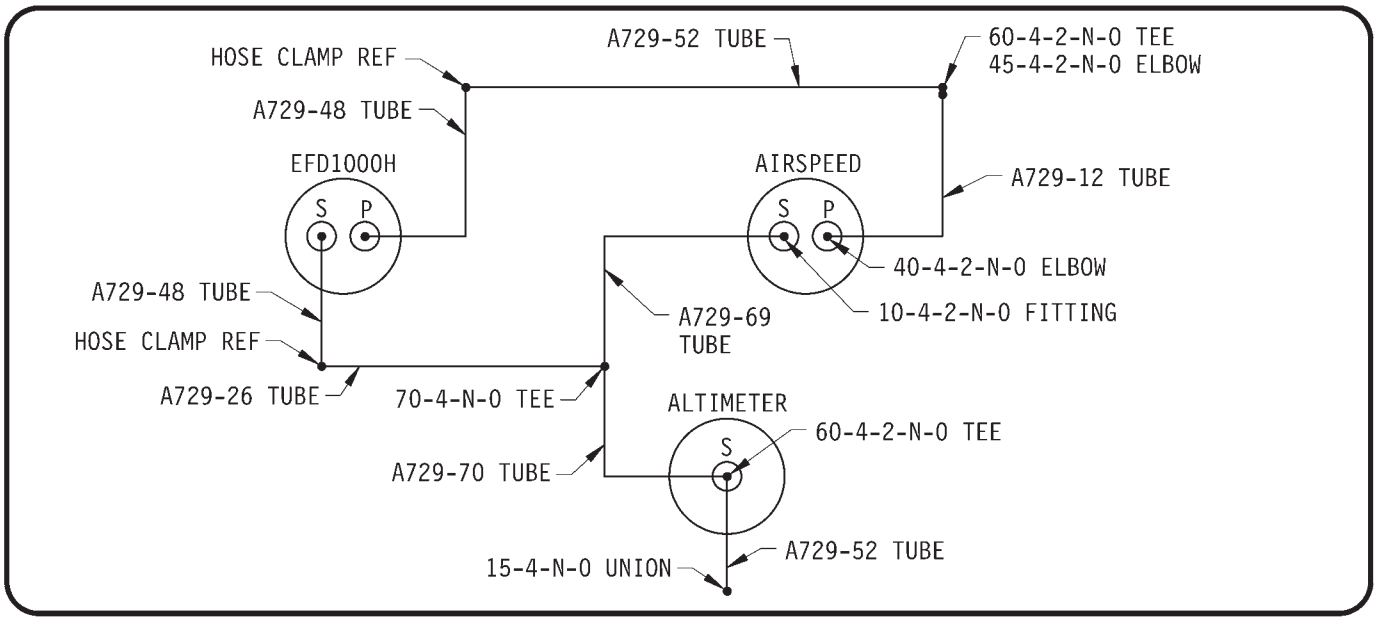

FIGURE 13-3 ASPEN PFD PITOT-STATIC SCHEMATIC

13.500 Optional Equipment

13.510 Aspen PFD Installation

Refer to R22 Illustrated Parts Catalog Figures 13-47 and 13-49.

A. Description

The Aspen PFD (Primary Flight Display) is an LCD unit with displays for attitude, altitude, airspeed, heading, and optional NAV (HSI/CDI). The Aspen PFD is a situational awareness aid, to be used in conjunction with required VFR instruments (altimeter, airspeed indicator, and magnetic compass).

The standard Aspen PFD installation configures the lower half of the display as a directional gyro. An optional installation configures the lower half of the display to a Horizontal Situation Indicator (HSI).

B. Schematic

Refer to Figure 14-42 for C800-1 Aspen PFD electrical schematic.

C. Removal

1. Turn battery switch off and pull-out EFIS circuit breaker (7.5 amp) at panel.
2. Gently depress blue tab at top of Aspen PFD to release display from mounting bracket.
3. Disconnect pitot and static lines from display using quick-disconnect couplers. Temporarily cap pitot and static line fittings at display and in aircraft to prevent contamination.
4. Loosen screws securing airframe wiring harness connector to display, unplug connector, and remove display.

D. Installation

1. Turn battery switch off and pull-out EFIS circuit breaker (7.5 amp) at panel.
2. Plug airframe wiring harness connector into Aspen PFD display and tighten screws. Verify security.
3. Remove temporary fitting caps and connect pitot and static lines to display using quick-disconnect couplers.
4. Insert display into mounting bracket until blue tab snaps into place. Verify security.
5. Push-in EFIS circuit breaker (7.5 amp) at panel. Turn battery & avionics switches on.
6. Perform appropriate functional checks per Aspen EFD1000H PFD Pilot's Guide. Turn battery and avionics switches off.
7. Perform pitot-static leak check.

13.510 Aspen PFD Installation (continued)

E. Antenna

Refer to Section 14.700 for antenna locations and R22 Illustrated Parts Catalog (IPC) Chapter 6.

NOTE
Do not use magnetized tools.

Removal

1. Turn battery switch off and pull-out EFIS circuit breaker (7.5 amp) at panel.
2. Using plastic scraper, remove B270-1 sealant from around EFIS antenna at corners where it attaches to tailcone.
3. Cut and discard ty-raps as required and disconnect antenna cable at connectors (secured to frame). Remove screws securing antenna and antenna ground wire to tailcone and remove antenna.

Installation

1. Turn battery switch off and pull-out EFIS circuit breaker (7.5 amp) at panel.
2. Remove paint and primer from antenna and antenna ground wire mating surfaces to ensure electrical ground.
3. Install screws securing antenna and antenna ground wire to tailcone. Verify security.
4. Apply small bead B270-1 sealant (0.1 inch max in height) around antenna at corners where it attaches to tailcone and allow to dry.
5. Connect antenna cable to antenna at connectors; secure to frame using ty-raps. Verify security.
6. Perform ground checks per Part D steps 5 and 6.

F. Scheduled Maintenance and Inspections

The internal battery must be tested for proper operation every 12 months. No calibration is necessary. Other maintenance is on condition. Contact Aspen Avionics at www.aspenavionics.com for instructions for continued airworthiness.

13.510 Aspen PFD Installation (continued)

G. Special Maintenance and Inspections

1. Turn battery and avionics switches off. Open circuit breaker panel and upper console.

2. Inspect condition of and verify no obvious damage to Aspen displays, pitot-static lines, metal braiding, copper bus bars, circuit breaker, and wiring. Verify no loose, chafed, or broken wires or terminals. Verify no evidence of arcing. Verify equipment security.

3. Secure circuit breaker panel and upper console. Perform ground checks per Part D steps 5 and 6.

13.600 Instrument Markings

See R22 Pilot's Operating Handbook (POH) Section 2 for instrument markings.

13.700 Troubleshooting

Vertical Speed Indicator

No Indication

- Defective indicator.

Erratic Indication

- Water in static system.
- Defective indicator.

Climb indication with no return to zero in level flight.

- Blockage in the static line.

Airspeed Indicator

No Indication

- Blockage of pitot tube.
- Disconnected pitot tube.
- Kinks (bends) in pitot line under upper console.
- Defective indicator.

Erratic Indication

- Loose pitot or static line connection.
- Broken pitot line.
- Water in pitot-static system.
- Defective instrument.

Altimeter

No Indication

- Blockage in static line.
- Defective instrument.

Erratic Indication

- Water in static line.

Intentionally Blank

CHAPTER 14

ELECTRICAL AND AVIONICS SYSTEMS

Section	Title	Page
14.000	Electrical and Avionics Systems	14.1
14.001	Introduction	14.1
14.002	Description	14.1
14.100	Dual Tachometer Adjustment	14.2
14.200	Low RPM Horn Adjustment	14.3
14.300	Alternator Output Voltage Adjustment without A942-1	14.3
14.400	Troubleshooting	14.3
14.405	A569 Low Rotor RPM Warning Unit	14.3
14.410	Electrical Troubleshooting	14.4
14.420	Instrument Troubleshooting	14.6
14.430	Clutch Actuator Troubleshooting	14.7
14.440	Electrically-Powered Instrument Calibration Values	14.8
14.500	Electrical Load Analysis	14.11
14.600	Electrical Systems Schematics	14.12
14.700	Antenna Locations	14.24A
14.800	Avionics Schematics	14.25
14.900	Upper Console Harness Plugs	14.41
14.1000	IFR Trainer	14.43
14.1010	IFR Trainer Component Loads	14.43
14.1020	IFR Trainer Console Access	14.45
14.1030	IFR Trainer Component Location	14.46
14.1040	IFR Trainer Avionics Schematics	14.47
14.1100	R22 Mariner Avionics Schematics	14.60
14.1200	Avionics for R22 Helicopter S/N 4591, 4650, 4651, 4656 & Subsequent	14.67
14.1210	A024-9 Electrical System Installation	14.67
14.1220	A036-9 Electrical Components Installation	14.67
14.1230	A804-12 Transponder (Garmin GTX 330 ES) Installation	14.71
14.1240	C058-5 Cyclic Grip Assembly	14.75
14.1250	C800-1 Aspen PFD Installation	14.75
14.1260	C802-2 COM Radio (Garmin GTR 225B) Installation	14.77
14.1270	C822-1 Audio Control (Garmin GMA 350H) Installation	14.81
14.1280	C831 GPS (Garmin GTN 600 series) Installation	14.85

Intentionally Blank

CHAPTER 14

ELECTRICAL AND AVIONICS SYSTEMS

14.000 Electrical and Avionics Systems

14.001 Introduction

This section contains information for correcting difficulties that may arise in the electrical system. It includes a general description and function of the components in the system along with some test and adjustment procedures.

14.002 Description

The electrical system includes a 14-volt, 60 ampere alternator (standard, 70 ampere optional), battery relay, alternator control unit and 14-volt battery.

The battery is in a fiberglass container normally located on the lower left steel tube frame. An optional location is in the nose under the upper console. Some R22 HP models may have the battery in the left-seat baggage compartment.

Circuit breakers are located on the ledge just forward of the forward left seat. The breakers are marked to indicate their function and amperage and are of the push-to-reset type.

The master battery switch, located on the console, controls the battery relay which disconnects the battery from all circuits except the tachometer and the clock. The tachometer and clock receive power directly from the battery via a Clutch switch terminal.

The alternator control unit (ACU) senses system voltage at the ammeter shunt via a remote sense wire. The ACU has three functions: it regulates alternator output voltage to maintain a battery voltage of 13.4–13.9 volts, warns of low-voltage by illuminating the ALT warning light if voltage decreases to 12.55–12.95 volts, and protects against over-voltage by shutting off alternator field if voltage increases to 15.75–16.25 volts.

The clutch actuator circuit incorporates a low-amperage fuse, in addition to its circuit breaker, to prevent a motor overload from tripping the circuit breaker and turning off the clutch light prematurely.

The lighting system includes the anti-collision light, navigation lights, landing lights, post and internal lights for the instruments and an overhead map light. Landing lights are wired through the clutch switch, turning the lights off when the clutch switch is disengaged. Warning lights on the instrument panel include clutch, low oil pressure, low fuel, main rotor and tail rotor gearbox chip lights, main rotor gearbox over-temp, low rotor RPM light, low voltage, rotor brake (if installed), governor off and starter on.

The gage cluster includes an ammeter and oil pressure, oil temperature, cylinder head temperature, and main and auxiliary fuel quantity gages. Included on the gages circuit are the carburetor air temperature and outside air temperature gages. The map light is also on the gages circuit as a “back-up” in the event of a short and failure of the lighting circuit.

14.002 Description (continued)

The tachometer is an electronic engine and rotor dual tachometer. The sensor for the engine tach is breaker points in the magneto on the left side of the helicopter. A Hall Effect sensor for the rotor tachometer senses the passage of two magnets on the main rotor gearbox input yoke. The signals from these sensors are conditioned by solid state circuits inside the dual tachometer. Each tachometer circuit has a separate circuit breaker and is completely independent of the other. They can be powered by either the alternator or the battery and receive current from two redundant sources. Power to the tachometer is interrupted only when the master battery and alternator switches are off and the clutch switch is disengaged.

CAUTION

The installation of electrical devices can affect the accuracy and reliability of the electronic tachometer; therefore, no electrical equipment may be installed in the R22 helicopter unless that particular installation is specifically approved by the factory.

14.100 Dual Tachometer Adjustment

1. The early model A792-1 Dual Tachometer is pre-set at the factory and is not adjustable in the field. For repair or adjustment, the unit must be returned to Robinson Helicopter. (No adjustment screw on early models.)

2. The A792-2 Dual Tachometer is pre-set at the factory. Slight variations between rotorcraft may require readjustment of rotor side of tachometer. To adjust tachometer:

   a. Remove screws that fasten instrument face panel to upper console and carefully pull panel aft.

   b. Ground run helicopter at 104% indication on the engine tachometer. Adjust the rotor tachometer to read 104%. On back of tachometer, turn the adjustment screw clockwise to increase and counter-clockwise to decrease rotor tachometer indication (1/8 turn changes indication approximate 1%).

   c. Reinstall instrument panel.

   d. If tachometer cannot be adjusted, replace or return to Robinson Helicopter Company for repair.

14.200 LOW ROTOR RPM WARNING UNIT ADJUSTMENT

When the collective is raised 0.2 to 0.4 inches (measured at grip) above fully down, the low-rotor RPM warning unit must activate the low-rpm warning horn and low-rpm light at 97% to 96% rotor RPM; horn and light must turn off above 96% to 97% rotor RPM.

The low rotor RPM warning unit is inside the upper console mounted on the left vertical panel. Some older helicopters may mount the unit on the right side, or ty-rapped to upper console's main wire bundle. Adjustments are made by turning an exposed screw on warning unit, accessible by removing a black-plastic plug from a 3/8-inch diameter hole on the left vertical panel. The A569-1 warning unit's (potted circuit board type) adjustment screw sensitivity is approximately 1/16 turn per 1% change. The A569-5 warning unit's (metal box type) adjustment screw sensitivity is approximately 2 turns per 1% change. If warning unit cannot be adjusted to above values it must be replaced.

14.300 ALTERNATOR OUTPUT VOLTAGE ADJUSTMENT WITHOUT A942-series ACU

To check or adjust the output voltage:

1. Connect a voltmeter to "I" terminal of voltage regulator and ground with helicopter running and read voltage (13.2 to 13.8 volts).

2. Output voltage may be adjusted using range screw on voltage regulator.

14.400 TROUBLE-SHOOTING

Following are some troubles and corrections. When investigating trouble eliminate causes one by one, beginning with the most probable.

14.405 A569-5 Low Rotor RPM Warning Unit

Perform following tests prior to replacing A569-5 low rotor-rpm warning unit:

1. Verify:

   a. Low RPM light bulb is functional.

   b. Master switch off.

   c. full-down collective.

   d. Horn circuit breaker in.

2. Access and disconnect both horn and A569-5 low rotor-rpm warning unit from airframe electrical wiring.

3. Turn Master switch on and verify Horn circuit breaker remains in. If Horn circuit breaker pops then -70 wire is shorted to ground; repair as required. Turn Master switch off.

4. On the warning unit's airframe electrical connector, install a jumper between wires -70 & -75.

5. Turn Master switch on and verify Horn Start circuit breaker remains in. If Horn Start circuit breaker pops then a short-to-ground exists in -75 wire and/or collective-activated V3-1 switch; repair as required.

14.405 A569-5 Low Rotor RPM Warning Unit (cont'd)

6. Fully raise collective and verify Horn Start circuit breaker remains in and Low RPM light illuminates. If Horn Start circuit breaker pops then a short-to-ground exists in -76 wire and/or -78 wire and/or collective-activated V3-1 switch; repair as required. If Low RPM light does not illuminate then collective-activated V3-1 switch is faulty or misadjusted and/or an open exists in -70, -75, or -76 wires.

7. Slowly raise and lower collective fully several times while simultaneously manipulating throttle. Verify Horn Start circuit breaker remains in and Low RPM light remains illuminated whenever collective is raised. . If Horn Start circuit breaker pops then a short-to-ground condition is occurring in -70, -75, or -76 wires and/or collective-activated V3-1 switch due to collective movement. Check for pinched/rubbing wiring and repair as required.

8. Turn Master switch off. Connect horn to airframe wiring.

9. Turn Master switch on. Raise collective and verify horn activates and has consistent tone. If Horn Start circuit breaker pops then horn is faulty and/or -78 wire is shorted to ground; repair as required. If horn fails to activate then -79 wire is open or horn is faulty; repair as required. If tone is inconsistent then horn is faulty and/or poor connections exist; repair as required.

10. If A569-5 warning unit has starter lockout circuit enabled (warning unit's 9-pin connector plugged into airframe harness), also perform following steps:

11. Check A999-1 master radio relay current draw:

    a. Master switch off and belt tension actuator fully disengaged.

    b. Disconnect A569-5 low-rpm warning unit's 9-pin connector and place an ammeter in series (positive lead on pin 7) between pins 7 and 8 on airframe side of connector.

    c. Master switch on, Horn Start and Clutch Start circuit breakers in, avionics off, rotor brake released, mixture at idle cut-off.

    d. Select key switch to Start position and crank engine. Note and record current draw at ammeter while cranking engine. Select key switch to Off position.

    e. Disconnect 582 wire at tab on starter solenoid and isolate connector (do not let it ground). Select key switch to Start position. Note and record current draw at ammeter; current should be 94-156 milliamps and a buzzing sound should be heard from the starter vibrator. Select key switch to Off position.

14.405 A569-5 Low Rotor RPM Warning Unit (cont'd)

12. Check starter circuit:

    a. Master switch off and belt tension actuator fully disengaged.

    b. Disconnect A569-5 low-rpm warning unit's 9-pin connector and jump pins 7 and 8 on airframe side of connector.

    c. Master switch on, Horn Start and Clutch Start circuit breakers in, rotor brake released, mixture at idle cut-off.

    d. Select key switch to Start position and crank engine. If engine does not crank there is a problem in the starter circuit. If engine cranks then there is a problem in either the A569-5 unit or the sense circuit.

13. Check A596-5 sense circuit:

    a. Master Switch on.

    b. Momentarily engage clutch and verify Clutch light illuminates then disengage clutch completely.

    c. Master switch off.

    d. Disconnect A051-1 actuator's black four-pin connector. Ground airframe-side plug's pin 1 thru a #330 (post light type) lamp.

CAUTION
Failure to gound pin 1 thru a #330 lamp (such as direct grounding) may result in wiring damage.

    e. Verify less than 200 ohms (20 ohm nominal) to ground at pin 4 and at pin 5 on ship side of A569-5's 9-pin connector.

    f. Master switch on.

    g. With A569-5 unit connected to airframe harness, verify voltage does not exceed 0.5V from pin 4 to ground and from pin 5 to ground.

    h. Master switch on, Horn Start and Clutch Start circuit breakers in, rotor brake released, mixture at idle cut-off.

    i. Select key switch to Start position and crank engine. Failure of engine to crank indicates problem in A569-5 unit.

14. Upon successful completion of preceding tests the A569-5 low rotor-rpm warning unit may be replaced and adjusted per Section 14.200.

14.410 Electrical Trouble-Shooting

TROUBLE	PROBABLE CAUSE	CORRECTION
1. No electrical power	Battery terminals corroded	Clean terminals
	Bad or no ground	Clean ground path
	Tripped circuit breaker	Check circuit, if circuit checks ok, reset circuit breaker
	Low battery voltage	Check battery. Recharge if necessary
	Low or no alternator output	Check alternator belt tension, wiring, and alternator control unit
	Bad wire or terminal	Replace
2. Engine cranks slowly, but will not start	Low battery voltage	Service or replace battery
	Insufficient drive belt deflection	Adjust actuator down-limit screw
	Corroded or dirty battery or starter terminals	Clean terminals
	Bad starter relay, wires or terminals	Replace defective parts
3. Engine cranks but will not start	Bad ignition switch.	Replace switch
	Bad starting vibrator	Repair or replace vibrator
	Incorrect retard timing	Adjust retard magneto internal timing
4. Starter fails to operate	Rotor brake engaged	Release rotor brake
	Low battery charge	Check and recharge if necessary
	Circuit breakers tripped	Reset both HORN START and CLUTCH START circuit breakers
	Actuator not fully disengaged	Engage actuator momentarily, then fully disengage
	Loose connections	Check all wiring (refer to wiring diagram).
	Defective wiring	Check all wiring (refer to wiring diagram).
	Starter motor - burned winding or bad brushes.	Repair or replace starter.

14.410 Electrical Trouble-Shooting (cont'd)

	TROUBLE	PROBABLE CAUSE	CORRECTION
5.	Discharged battery	Battery worn out	Replace
		Charging rate not set correctly	Reset
		Standing too long	Remove and recharge battery
		Equipment left on accidentally	Remove & recharge battery.
6.	Starter – Low cranking speed	Same electrical causes as listed under "starter fails to operate"	Same remedies as listed under "starter fails to operate"
7.	Battery life is short	Impurities in electrolyte	Replace battery
		Low charging rate	Adjust voltage regulator
8.	Electrolyte runs out of battery	Too much water added to battery and charging rate too high	Drain and keep battery at proper level and adjust voltage regulator
9.	Excessive corrosion inside container	Spillage from overfilling	Use care in adding water.
		Vent lines leaking or clogged	Repair or clean
		Charging rate too high	Adjust voltage regulator
10.	Battery consumes excessive water	Charging rate too high (if in all cells)	Correct charging rate
11.	Alternator fails to supply charging current with engine operating	Alternator defective	Replace
		Voltage regulator defective	Replace
		Overvoltage relay defective	Replace
		Alternator switch defective	Replace

14.410 Electrical Trouble-Shooting (cont'd)

	TROUBLE	PROBABLE CAUSE	CORRECTION
12.	Starter kicks back while cranking; may cause broken starter or starter ring gear	Retard breaker contact in engine left magneto pushed out or no connection between lead and magneto contact	Measure retard breaker lead connection. Connector lead must be 0.609 in. ±0.10. There must be a small amount of springback when into magneto.
		Incorrect ignition vibrator wiring	Trace ignition vibrator wiring from ignition switch to magneto. Correct as required.
		Bad ignition switch See RHC Service Letter #29	Replace ignition switch
		Bad ignition vibrator	Replace vibrator
		Incorrect internal magneto retard breaker timing. Engine left magneto	Correct as required. Consult TCM Aircraft Products literature.
		Impulse coupling starting assist	Replace impulse coupling with ignition vibrator starting assist. RHC KI-4.

14.420 Instrument Trouble-Shooting

	TROUBLE	PROBABLE CAUSE	CORRECTION
1.	Engine gage(s) not reading	Tripped circuit breaker	Check circuit. If not reading, but circuit checks OK, reset circuit breaker.
		No power or ground	Check power and ground wires.
		Bad sender or wire	Check with new one, replace sender or wire if necessary.
		Bad gage	Check with new gage. Replace if necessary.
2.	Erratic or intermittent reading	Loose power, ground or sender wire. Loose battery connection.	Check all three. Tachometer will be erratic when alternator switch turned off if there is a bad battery connection.
3.	Excessively high or low gage readings	Bad gage	Check with new gage.
		Crossed or shorted wire	Check circuit.

14.430 Clutch Actuator Electrical Trouble-Shooting

TROUBLE		PROBABLE CAUSE
Actuator disengaged will not engage warning (yellow)		
LIGHT ON	**LIGHT OFF**	
X		1. Motor assembly seized.
X		2. Motor fuse blown (1 ½-amp).
X		3. Open circuit in motor wiring.
X		4. Overtravel switch assembly tripped.
	X	5. No voltage at circuit breaker.
	X	6. Circuit breaker tripped.
	X	7. Spring switch open (Normally closed).
	X	8. -88 wire not grounded.

TROUBLE		PROBABLE CAUSE
Actuator engaged will not disengage warning (yellow)		
LIGHT ON	**LIGHT OFF**	
X		1. Motor assembly seized.
X		2. Motor fuse blown (1 ½-amp).
X		3. Open circuit in motor wiring.
X		4. Overtravel switch assembly tripped.
	X	5. No voltage at circuit breaker.
	X	6. Circuit breaker tripped.
	X	7. Up limit switch stuck (Normally closed).
	X	8. -88 wire not grounded.

TROUBLE	PROBABLE CAUSE
In flight actuator engaged warning light (yellow)	
FLICKERS	1. Actuator column spring uncalibrated. 2. A190 drive belts mismatched. 3. Lower drive sheave improperly torqued. 4. A184 or A181 bearing running rough.
COMES ON FOR 1 – 6 SECONDS	Normal operation of actuator as it retensions drive belts.
COMES ON FOR OVER 6 SECONDS	1. Drive belts stretched beyond limit of actuator overtravel switch. Belts must be replaced. 2. Actuator overtravel switch activated by outside force.

14.440 Electrically Powered Instrument Calibration Values

Using Vibrex 2000 balancing equipment (or similar) capable of displaying ±1 rpm resolution and calibrated within one year, verify tachometer accuracy per following tables. Connect equipment in accordance with sections 10.221 and 6.240 (use photocell instead of Strobex per Figure 6-4A). Operate aircraft at noted tachometer indications and verify engine and rotor rpms as specified. Tachometer needles are 1% wide.

A792-x Dual Tachometer

Tachometer indication	Engine RPM	Rotor RPM
97%	2471-2476	494-495
100%	2548-2552	509-510
104%	2649-2655	529-530

The rotor tachometer may be adjusted per section 14.100. No other adjustments are permitted. If tachometer does not meet accuracy tolerance then it must be replaced or returned to RHC for repair.

A058-5 Carb. Air Temp. Probe

0 degrees	=	89.68/91.08 ohms
15 degrees	=	95.67/98.07 ohms
16 degrees	=	96.10/98.50 ohms
17 degrees	=	96.54/98.94 ohms
18 degrees	=	96.97/99.37 ohms
19 degrees	=	97.40/99.80 ohms
20 degrees	=	97.83/100.23 ohms
21 degrees	=	98.27/100.67 ohms
22 degrees	=	98.70/101.10 ohms
23 degrees	=	99.13/101.53 ohms
24 degrees	=	99.56/101.96 ohms
25 degrees	=	100.00/102.40 ohms

A604-2 Carb. Air Temp. Gage at 13.7 Vdc;

77.40 ohms	=	-30 ± 2	degrees C
81.73 ohms	=	-20 ± 1.75	degrees C
86.05 ohms	=	-10 ± 1.5	degrees C
90.38 ohms	=	0 ± 1	degrees C
94.71 ohms	=	10 ± 1.5	degrees C
99.03 ohms	=	20 ± 1.75	degrees C
103.36 ohms	=	30 ± 2	degrees C

Example: Replacing the carburetor air temperature probe with a ¼ to 1-watt 100-ohm resistor should result in a indication of approximately 21 degrees C (measure exact resistor value & refer to above). A probe dipped in a Styrofoam cup full of crushed ice and water should indicate 90.38 ohms resistance per above table. Probe installation torque is 3 to 4 inch-pounds; over-torquing probe will result in damage.

14.440 Electrically Powered Instrument Calibration Values (Cont'd)

Following instrument cluster gages are calibrated at 20 to 25 degree angle from horizontal.

Fuel level senders should have 90±2 ohms resistance when fully up (full fuel) and 0 to 0.5 ohm when fully down (no fuel). Perform fuel sender calibration per Section 12.230 whenever sender is replaced, or if factory-set fuel gage potentiometers have been disturbed. On backside of each fuel gage are "Null" and "Gain" potentiometer screws, covered with aluminum tape pressed against the screw heads to prevent rotation. "Null" potentiometer is adjusted so gage indicates empty at 0.7 ohm sender circuit resistance; "Gain" potentiometer is adjusted so gage indicates half at 42 ohms sender circuit resistance. Calibration values are:

Fuel Quantity Gages 6246-00473 (14V)

0.70 ohm =	E (empty) -1, +0	pointer width
21.20 ohms =	1/4 full ± 1	pointer width
42.00 ohms =	1/2 full ± 1	pointer width
67.50 ohms =	3/4 full ± 1	pointer width
90.00 ohms =	F (full) ± 1	pointer width

Ammeter 6246-00468 (14V)

-104 mV =	-70 amps ± 1	pointer width
-52 mV =	-35 amps ± 1	pointer width
0 mV =	0 amps ± ¼	pointer width
+52 mV =	+35 amps ± 1	pointer width
+104 mV =	+70 amps ± 1	pointer width

CHT Probe 3080-38 (14V)

200 degrees F =	745 ohms
475 degrees F =	38 ohms
500 degrees F =	32 ohms

CHT Gage 6246-00088 (14V)

745 ohms =	200 degrees F ± 1	pointer width
110 ohms =	350 degrees F ± 1	pointer width
34 ohms =	500 degrees F ± ½	pointer width

Oil Pressure Sender B308-1 (14V)

0 psi =	5-13 ohms
29 psi =	48-57 ohms
58 psi =	84-94 ohms
87 psi =	119-131 ohms
115 psi =	145-161 ohms

115-psi redline Oil Pressure Gage 6246-00647 (14V)

9 ohms =	0 psi ± 1	pointer width
46 ohms =	25 psi ± 1	pointer width
84 ohms =	55 psi ± 1	pointer width
131 ohms =	95 psi ± 1	pointer width
152 ohms =	115 psi ± 1	pointer width

14.440 Electrically Powered Instrument Calibration Values (Cont'd)

Older, 100-psi redline Oil Pressure Gage 6246-00089 (14V)

0 psi	=	10.0 ohms
25 psi	=	46.5 ohms
60 psi	=	90.0 ohms
90 psi	=	125.5 ohms
100 psi	=	137.0 ohms

Oil Temperature Sender A760-1 (14V)

100 degrees F	=	497 ohms
150 degrees F	=	179 ohms
200 degrees F	=	72 ohms
250 degrees F	=	34 ohms

Oil Temperature Gage 6246-00090 (14V)

903.5 ohms	=	75 degrees F	± 1 pointer width
100.0 ohms	=	180 degrees F	± 1 pointer width
36.0 ohms	=	245 degrees F	± 1 pointer width

14.500 Electrical Load Analysis

To calculate the total electrical load for a specific helicopter, identify all items of equipment installed on the helicopter from the table below and sum the corresponding continuous and intermittent loads.

Maximum continuous alternator load is given in the table below:

System Voltage	Alternator Rating	Maximum Continuous Load
14V	60 amp	54 amps

Intermittent loads are provided for reference.

Alternately, the electrical load may be measured directly at the battery output terminal with the alternator switched off and all other equipment turned on. The measured load may be scaled by the ratio of battery voltage to nominal system voltage to obtain a value that is compared with the alternator load limit.

WARNING

Field (non-factory) installation of electronic equipment can be hazardous. Due to the compactness of the console and tunnel containing the controls and wire bundles, installation of any additional wires can interfere with flight controls. Electronic tachometers, warning systems, and navigation equipment essential to flight are sensitive to interference from other electrical devices. The reliability and accuracy of the tachometers is essential for safe operation of the helicopter, and installation of an electrical device not tested and approved by RHC may result in a hazardous condition.

EQUIPMENT	QTY	CONTINUOUS AMPS EACH	INTERMITTENT AMPS EACH	CONTINUOUS TOTAL	INTERMITTENT TOTAL
MAIN BUS					
ESSEX BATTERY RELAY	1	0.75	0.75	0.75	0.75
KISSLING BATTERY RELAY	1	0.35	0.35	0.35	0.35
ALTERNATOR FIELD	1	2.40	2.40	2.40	2.40
AVIONICS RELAY	1	0.13	0.13	0.13	0.13
ENGINE GAGE CLUSTER	1	0.60	0.60	0.60	0.60
HOURMETER	1	0.03	0.03	0.03	0.03
CARB AIR TEMP	1	0.13	0.13	0.13	0.13
AMMETER	1	0.50	0.50	0.50	0.50
DIGITAL OAT GAGE	1	0.15	0.15	0.15	0.15
MAP LIGHT	1	0.00	0.58	0.00	0.58
WARNING LIGHTS	8	0.00	0.08	0.00	0.64
FULL THROTTLE CAUTION LIGHT	1	0.00	0.08	0.00	0.08
RPM GOVERNOR MOTOR	1	0.00	1.50	0.00	1.50
BELT TENSION ACTUATOR	1	0.00	1.20	0.00	1.20

14.500 Electrical Load Analysis (continued)

EQUIPMENT	QTY	CONTINUOUS AMPS EACH	INTERMITTENT AMPS EACH	CONTINUOUS TOTAL	INTERMITTENT TOTAL
MAIN BUS (continued)					
AUX POWER PLUG (MAX)	1	10.00	10.00	10.00	10.00
HEATER BLOWER	1	7.50	7.50	7.50	7.50

EQUIPMENT	QTY	CONTINUOUS AMPS EACH	INTERMITTENT AMPS EACH	CONTINUOUS TOTAL	INTERMITTENT TOTAL
TACH BUS					
DUAL TACHOMETER (E)	1	0.10	0.10	0.10	0.10
DUAL TACHOMETER (R)	1	0.10	0.10	0.10	0.10

EQUIPMENT	QTY	CONTINUOUS AMPS EACH	INTERMITTENT AMPS EACH	CONTINUOUS TOTAL	INTERMITTENT TOTAL
LIGHTS BUS					
POSITION LIGHTS (L, R, & AFT, INCANDESCENT)	3	2.20	2.20	6.60	6.60
POSITION LIGHTS (L & R, LED)	2	0.25	0.25	0.50	0.50
POSITION LIGHT (AFT, LED)	1	0.30	0.30	0.30	0.30
OVERHEAD PANEL LIGHT	1	1.00	1.00	1.00	1.00
POST LIGHTS	7	0.08	0.08	0.56	0.56
INSTRUMENT LIGHTS	4	0.20	0.20	0.80	0.80
LANDING LIGHT RELAY	1	0.20	0.20	0.20	0.20
LANDING LIGHTS (INCANDESCENT)	2	7.70	7.70	15.40	15.40
LANDING LIGHTS (HID)	2	2.90	9.52	5.80	19.04
ANTI-COLLISION LIGHT & POWER SUPPLY	1	3.20	3.20	3.20	3.20
ANTI-COLLISION LIGHT (LED)	1	0.90	4.00	0.90	4.00

EQUIPMENT	QTY	CONTINUOUS AMPS EACH	INTERMITTENT AMPS EACH	CONTINUOUS TOTAL	INTERMITTENT TOTAL
AVIONICS					
KY197A COM	1	0.80	5.20	0.80	5.20
GTR225B COM	1	0.59	5.31	0.59	5.31
GNS430 COM/NAV/GPS	1	2.44	8.40	2.44	8.40
GTN650 COM/NAV/GPS	1	2.65	6.97	2.65	6.97
KX155 OR KX165 NAV/COM	1	0.70	8.50	0.70	8.50
KR87 ADF	1	1.24	1.24	1.24	1.24

14.500 Electrical Load Analysis (continued)

EQUIPMENT	QTY	CONTINUOUS AMPS EACH	INTERMITTENT AMPS EACH	CONTINUOUS TOTAL	INTERMITTENT TOTAL
AVIONICS (continued)					
KN63 DME	1	1.21	1.21	1.21	1.21
GARMIN TRANSPONDER	1	1.10	3.10	1.10	3.10
GARMIN RADIO NAVIGATION INDICATOR	1	0.41	0.41	0.41	0.41
KING RADIO NAVIGATION INDICATOR	1	0.08	0.08	0.08	0.08
MARKER BEACON	1	0.50	0.50	0.50	0.50
KCS55A HSI	1	3.23	3.23	3.23	3.23
RADAR ALTIMETER	1	1.45	1.45	1.45	1.45
AA12S AUDIO CONTROL	1	1.00	1.00	1.00	1.00
GMA 350H AUDIO CONTROL	1	0.80	1.50	0.80	1.50
ASPEN 1000H EFD	1	4.80	4.80	4.80	4.80
ATTITUDE HORIZON (MECHANICAL)	1	0.54	1.40	0.54	1.40
ATTITUDE HORIZON (LCD)	1	0.20	0.20	0.20	0.20
TURN COORDINATOR	1	0.70	0.70	0.70	0.70
DIRECTIONAL GYRO	1	0.44	1.40	0.44	1.40
PA/SIREN CONTROL	1	0.05	0.05	0.05	0.05
PA/SIREN SPEAKER	1	7.70	7.70	7.70	7.70
ICOM IC-M412 MARINE TRANSCIEVER	1	1.50	5.50	1.50	5.50
KENWOOD TK-7160 OR TK8160 FM TRANSCIEVER	1	1.00	8.00	1.00	8.00
KENWOOD TK-7180 OR TK8180 FM TRANSCIEVER	1	1.00	9.00	1.00	9.00
YAESU FT-8800R FM TRANSCIEVER	1	0.50	8.00	0.50	8.00
VERTEX VX-2200 FM TRANSCIEVER	1	2.50	11.00	2.50	11.00

EQUIPMENT	QTY	CONTINUOUS AMPS EACH	INTERMITTENT AMPS EACH	CONTINUOUS TOTAL	INTERMITTENT TOTAL
OTHER EQUIPMENT					
STARTER RELAY	1	0.00	15.00	0.00	15.00
STARTING VIBRATOR	1	0.00	2.50	0.00	2.50
STARTER MOTOR	1	0.00	200.00	0.00	200.00
CLOCK, STANDARD	1	0.02	0.02	0.02	0.02
CLOCK, DIGITAL	1	0.00	0.00	0.00	0.00

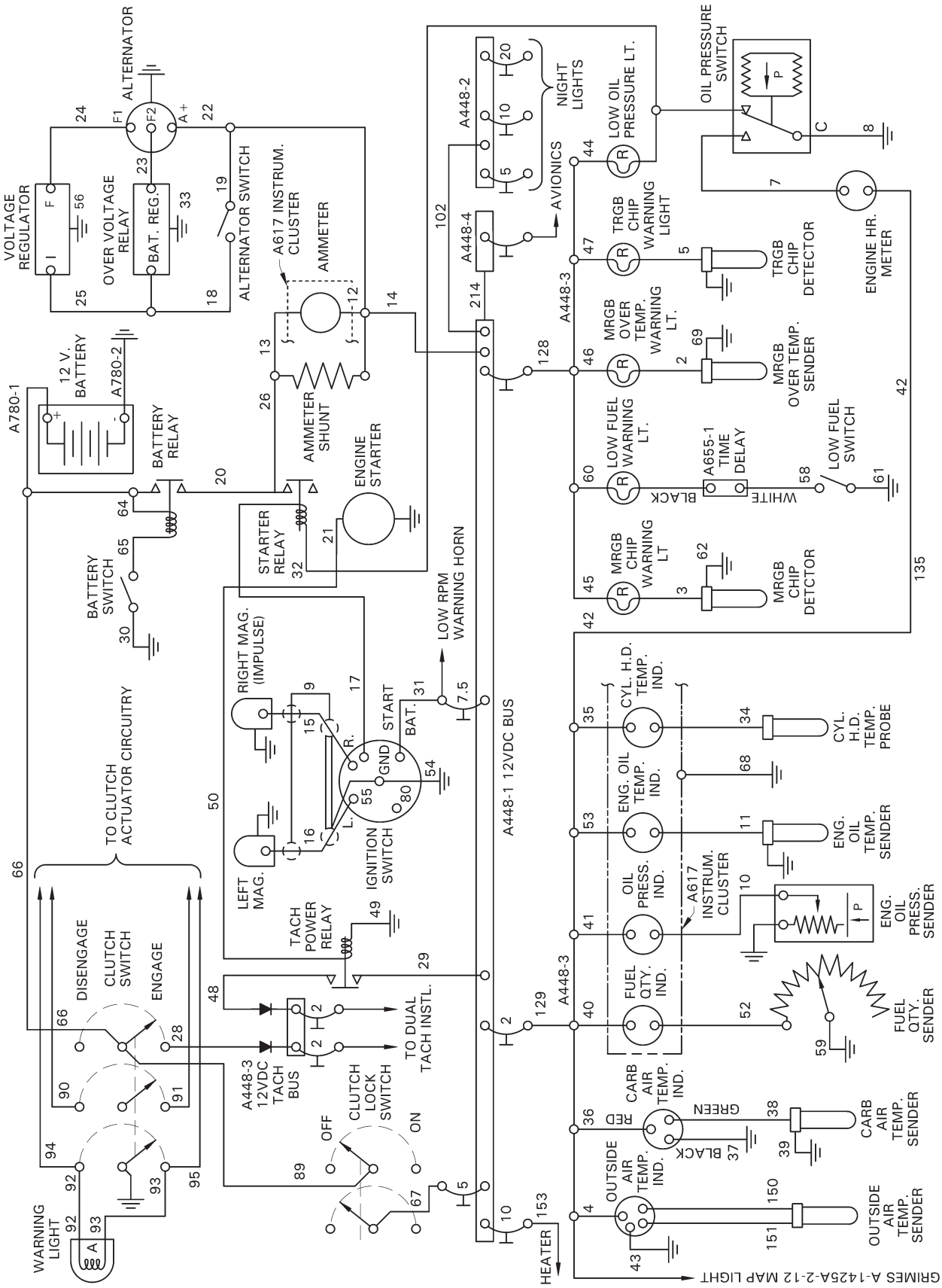

FIGURE 14-1 ELECTRICAL SYSTEM SCHEMATIC (S/N 0001 thru 0077)
(Impulse coupling ignition; 9/21/79 thru 12/1/80)

14.600 (cont'd)

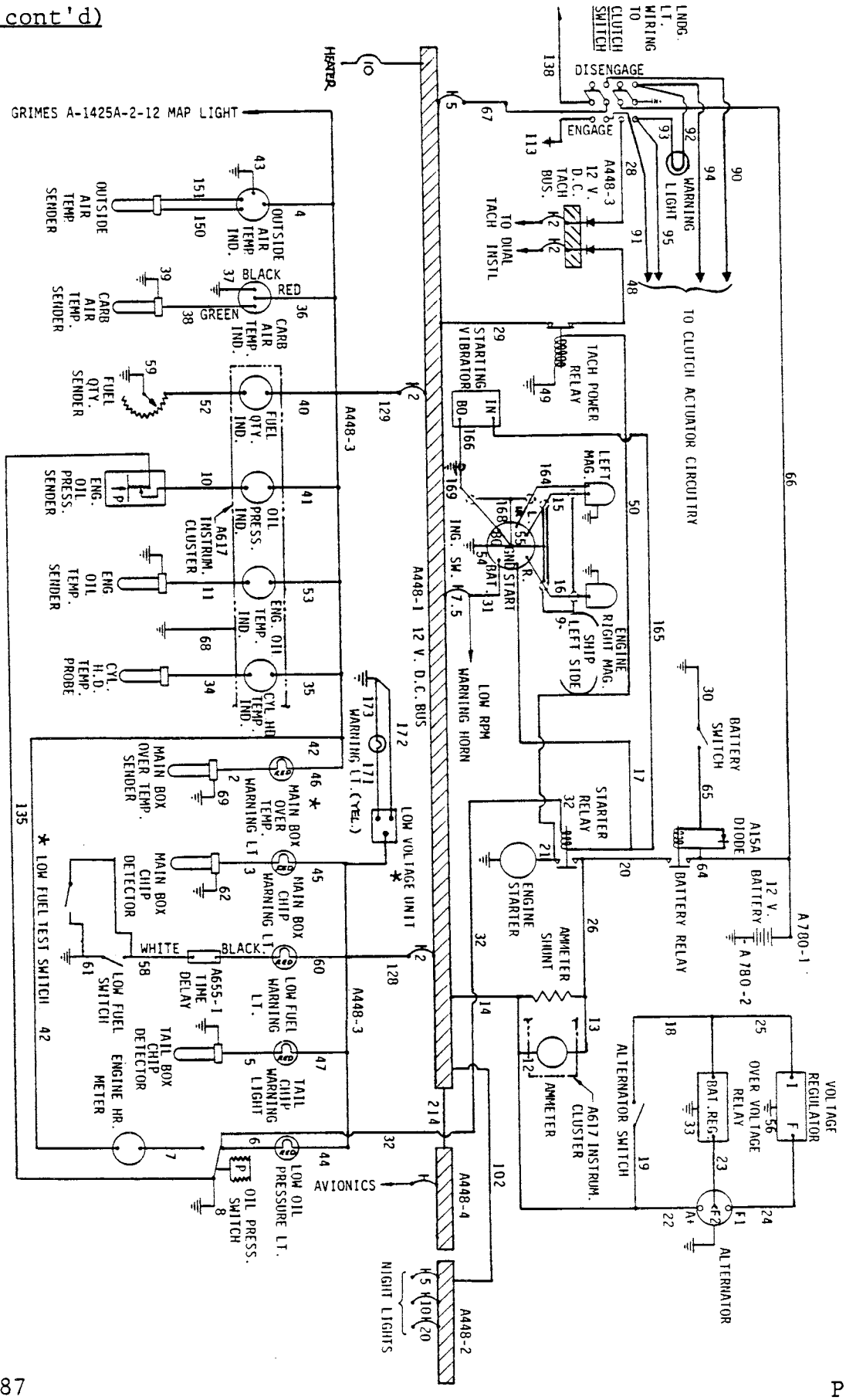

ELECTRICAL SYSTEM SCHEMATIC (S/N 078 THRU 324)(12/9/80 THRU 1/10/83)
(IGNITION VIBRATOR) *These changes added to some A/C Ser.# in this series
FIGURE 14-2 See Page 14.15 Schematic

14.600 (cont'd)

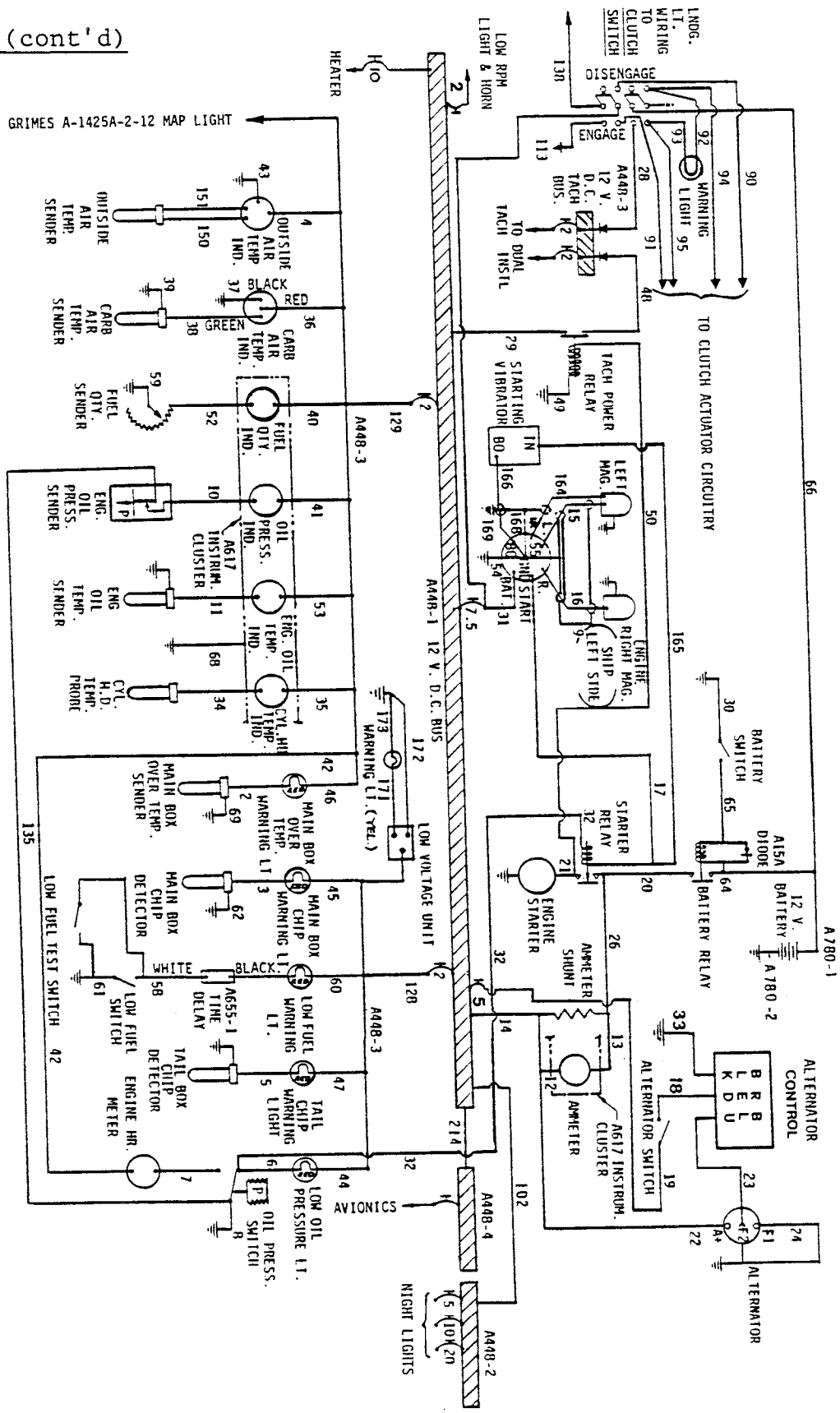

ELECTRICAL SYSTEM SCHEMATIC (S/N 324 THRU 363)(1/10/83 THRU 8/23/83)
(IGNITION VIBRATOR)
FIGURE 14-2A

14.600 (cont'd)

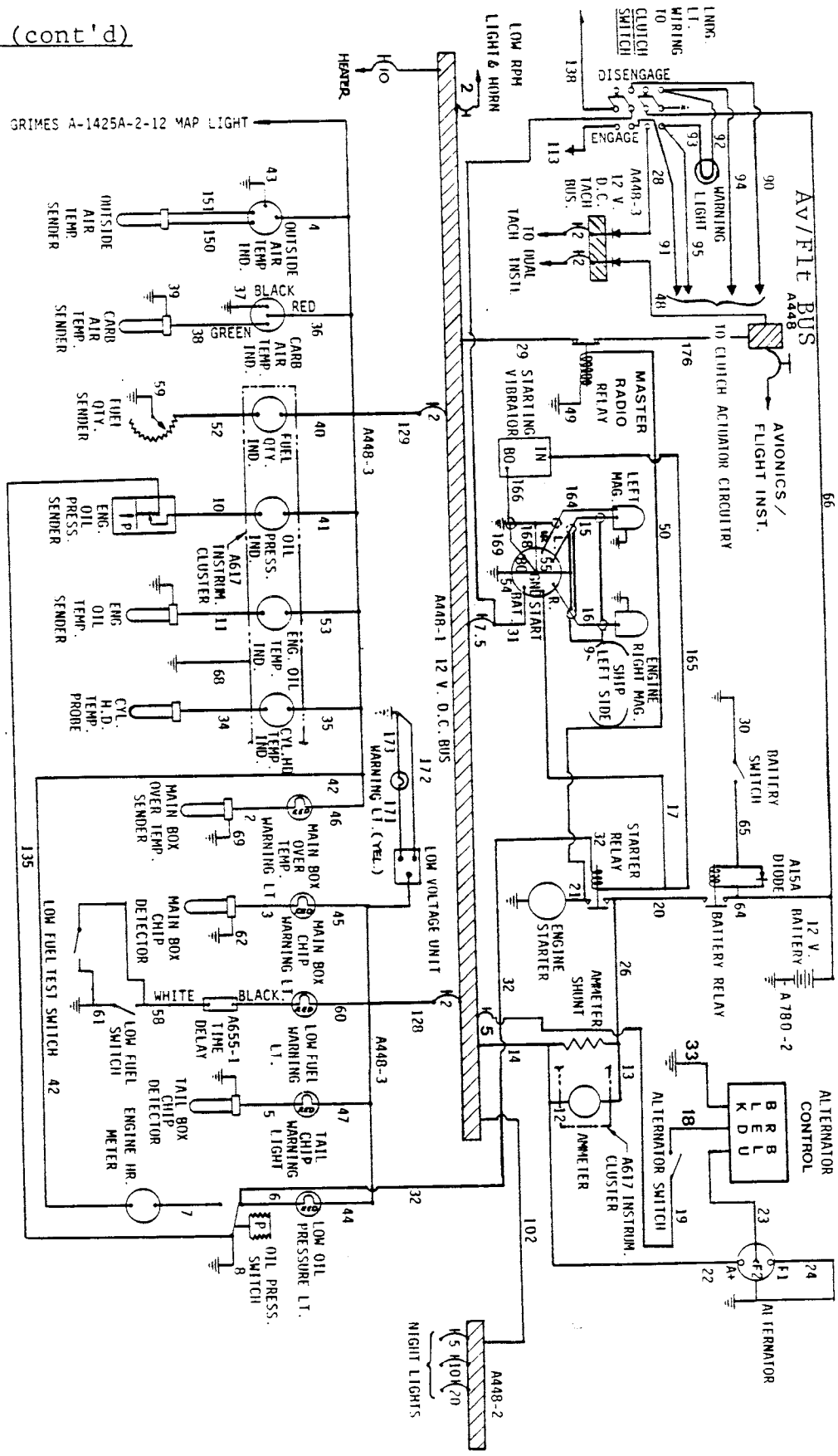

ELECTRICAL SYSTEM SCHEMATIC (S/N 350,351,357-361,& 364 THRU 411)
(IGNITION VIBRATOR) R22 ALPHA
FIGURE 14-2B (8/4/83 THRU 5/18/84)

14.600 (cont'd)

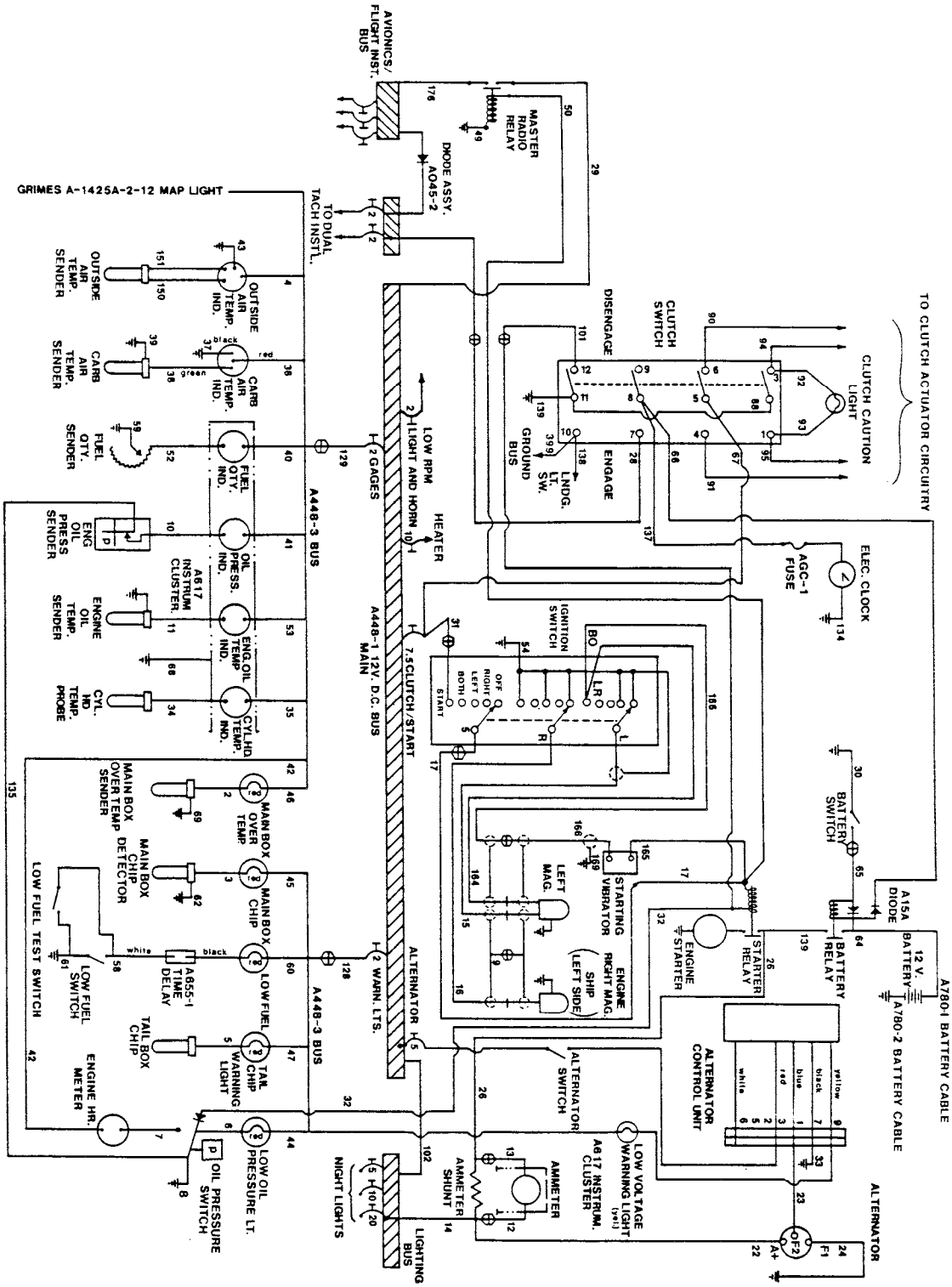

ELECTRICAL SYSTEM SCHEMATIC (S/N 412 thru 443)
(IGNITION VIBRATOR) (5/18/84 thru 10/1/84)
FIGURE 14-2C

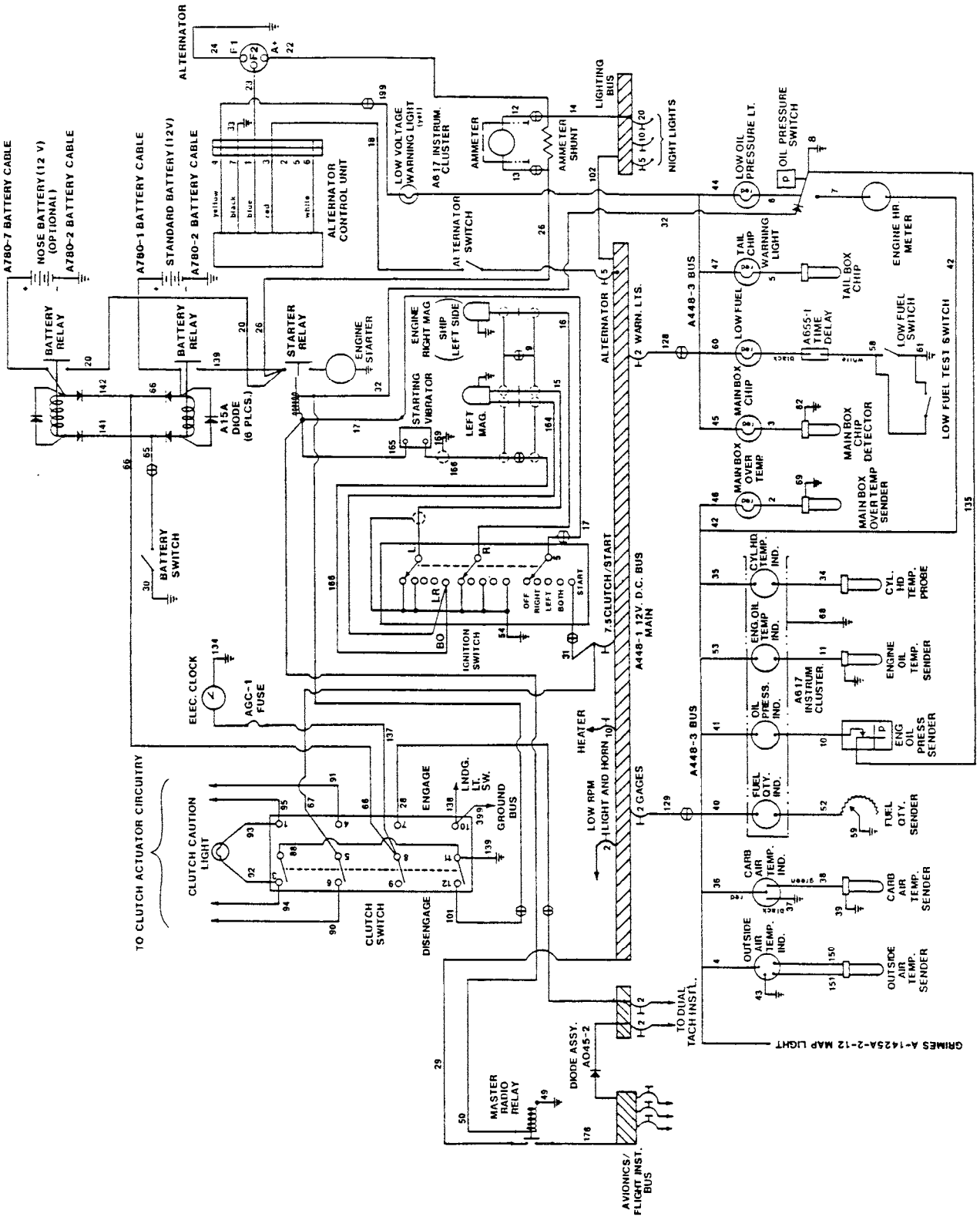

FIGURE 14-2D ELECTRICAL SYSTEM SCHEMATIC - DUAL BATTERY PROVISION (IGNITION VIBRATOR) (5/18/84 thru 10/1/84)

14.600 (cont'd)

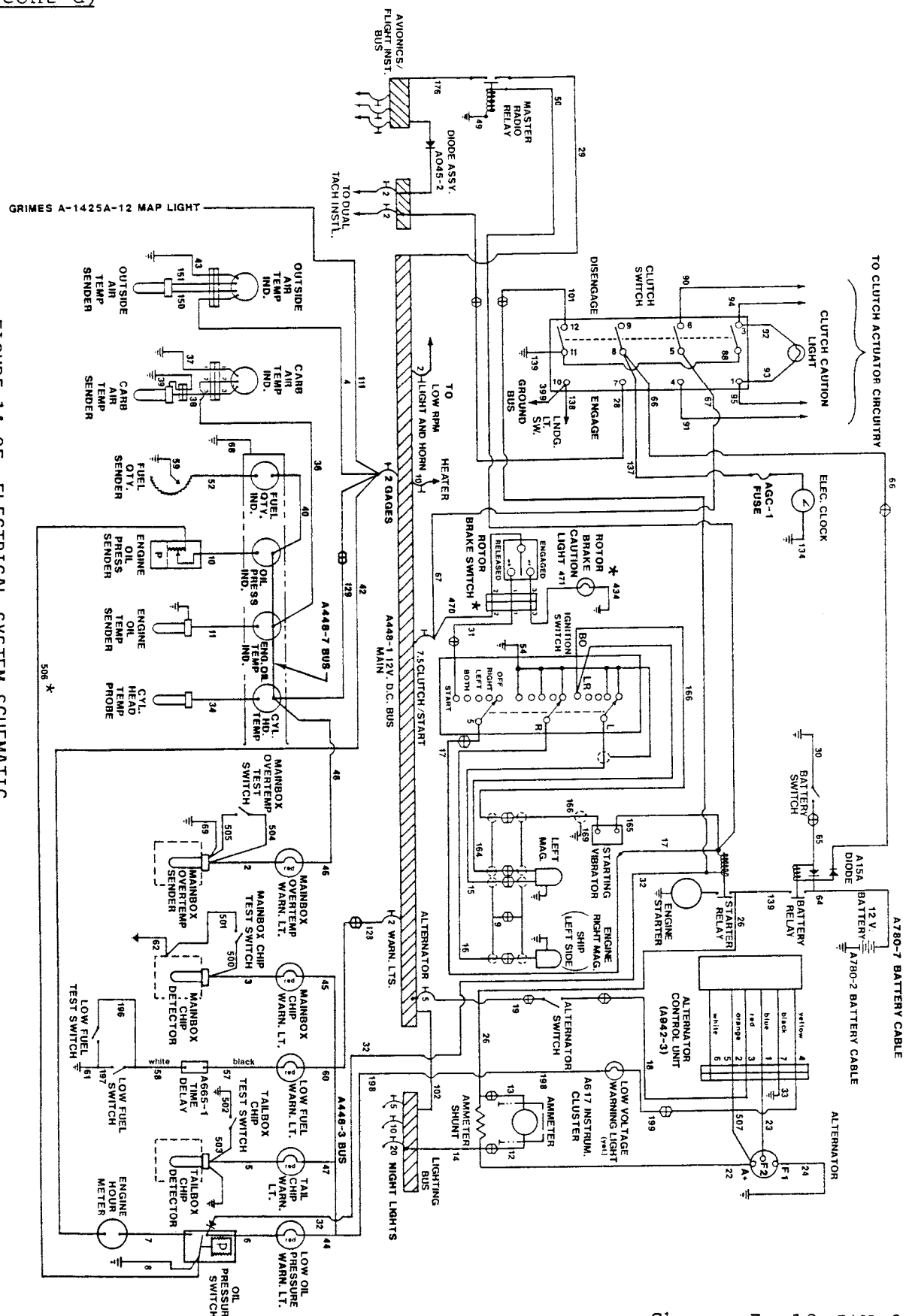

FIGURE 14-2F ELECTRICAL SYSTEM SCHEMATIC
(IGNITION VIBRATOR) (S/N 444 thru 655, 10/2/84 thru 6/10/87)

*If installed.

14.600 (cont'd)

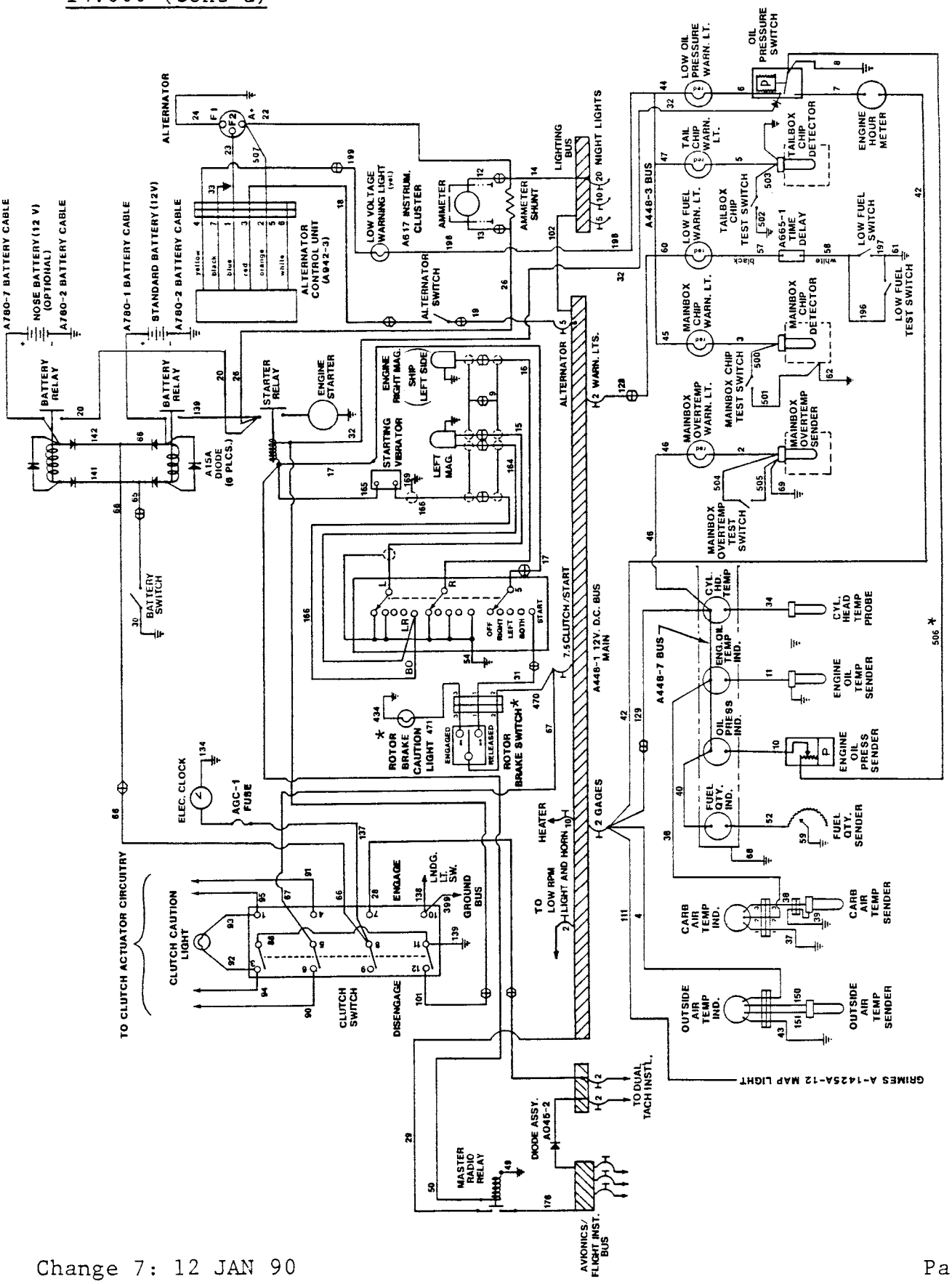

FIGURE 14-2F ELECTRICAL SYSTEM SCHEMATIC - DUAL BATTERY PROVISION (IGNITION VIBRATOR) (S/N 444 thru 655, 10/2/84 thru 6/10/87)

*If installed.

14.600 (cont'd)

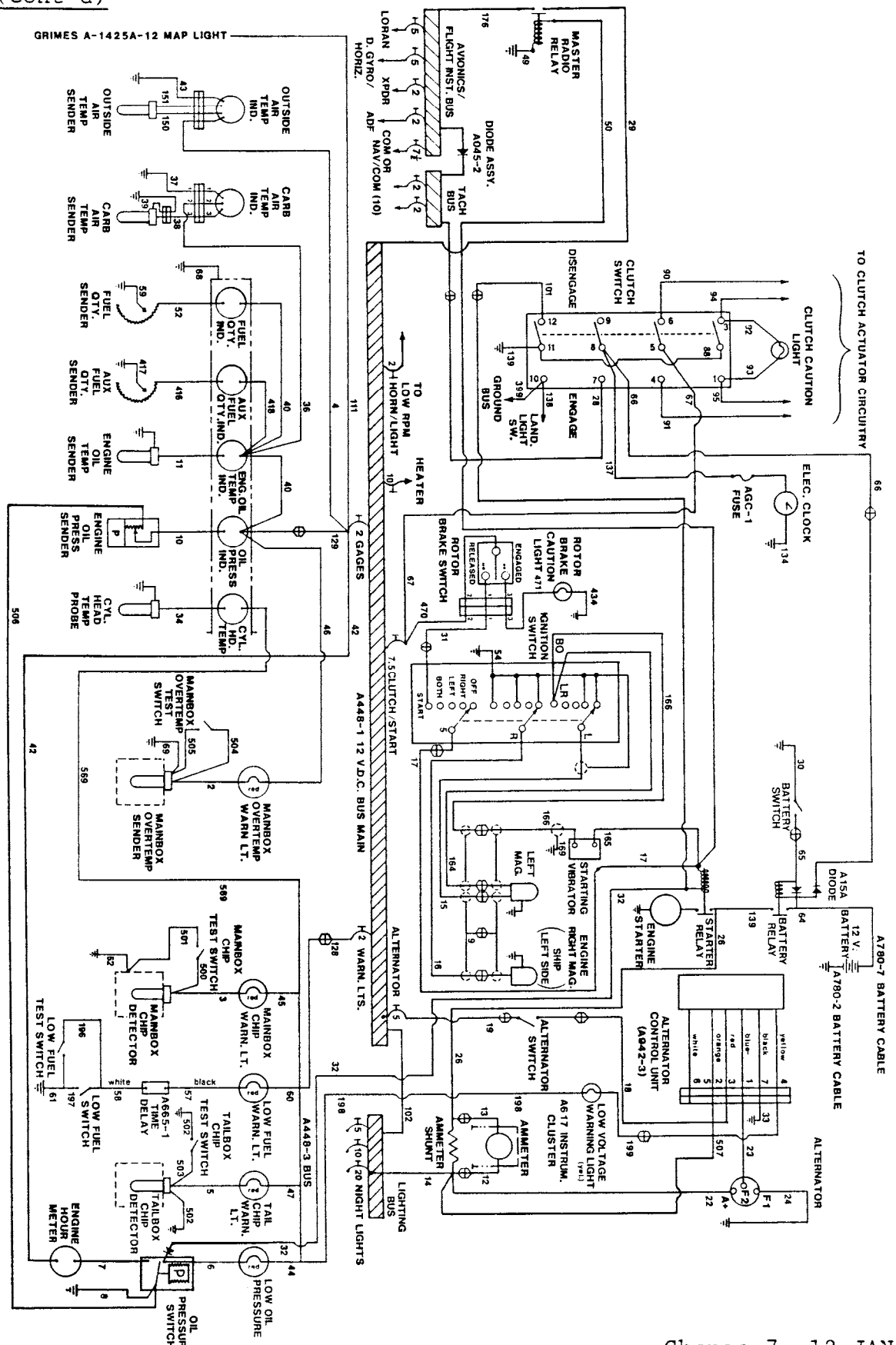

FIGURE 14-2G ELECTRICAL SYSTEM SCHEMATIC (IGNITION VIBRATOR) (S/N 656 THRU 1084 EXCEPT S/Ns 1052, 1056, 1067, & 1071 AND OVERHAULED SHIPS 6/10/87 AND ON)

14.600 (cont'd)

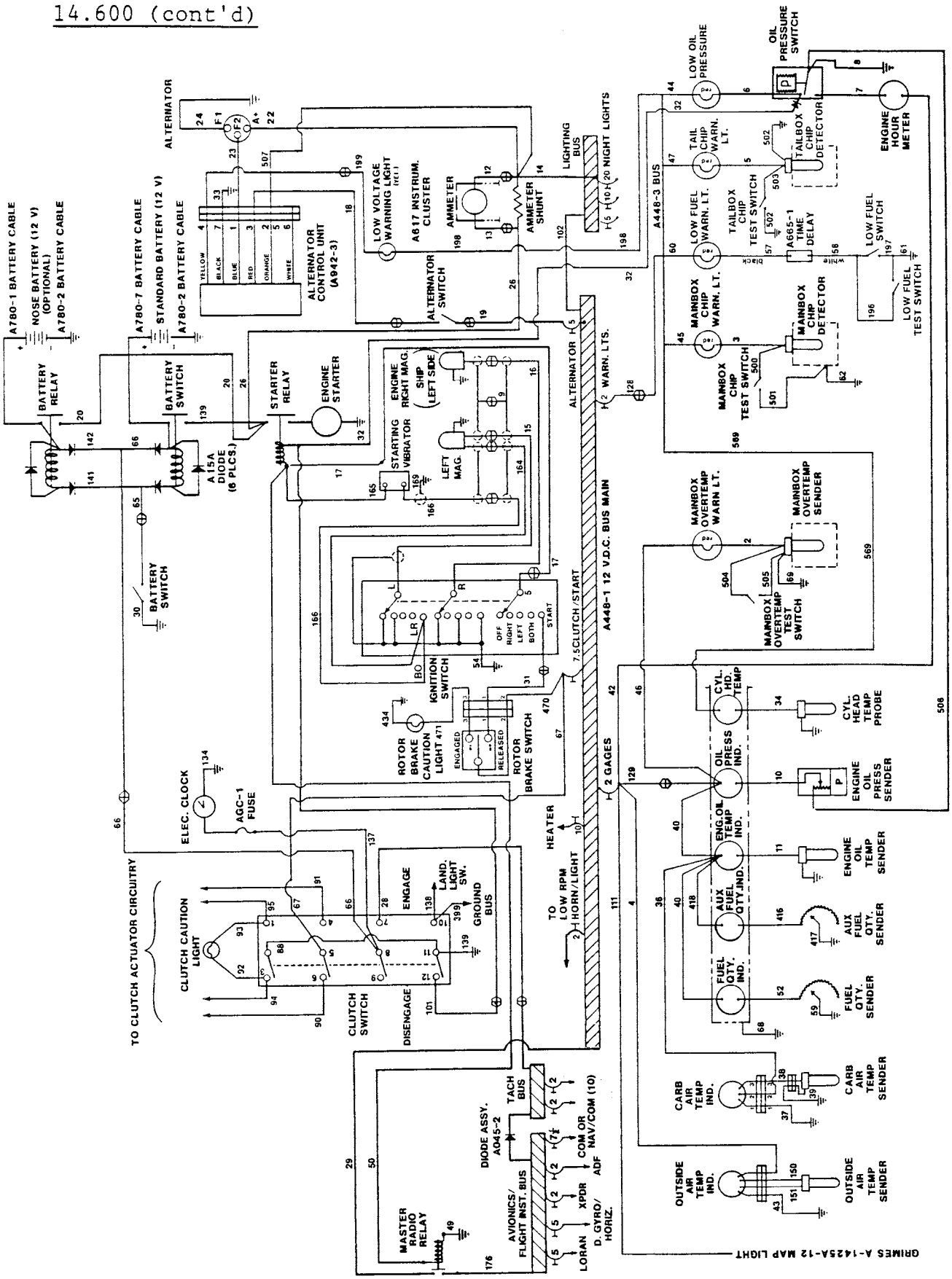

FIGURE 14-2H ELECTRICAL SYSTEM SCHEMATIC - DUAL BATTERY PROVISION (IGNITION VIBRATOR) (S/N 656 THRU 1084 EXCEPT S/Ns 1052, 1056, 1067, & 1071 AND OVERHAULED SHIPS 6/10/87 AND ON)

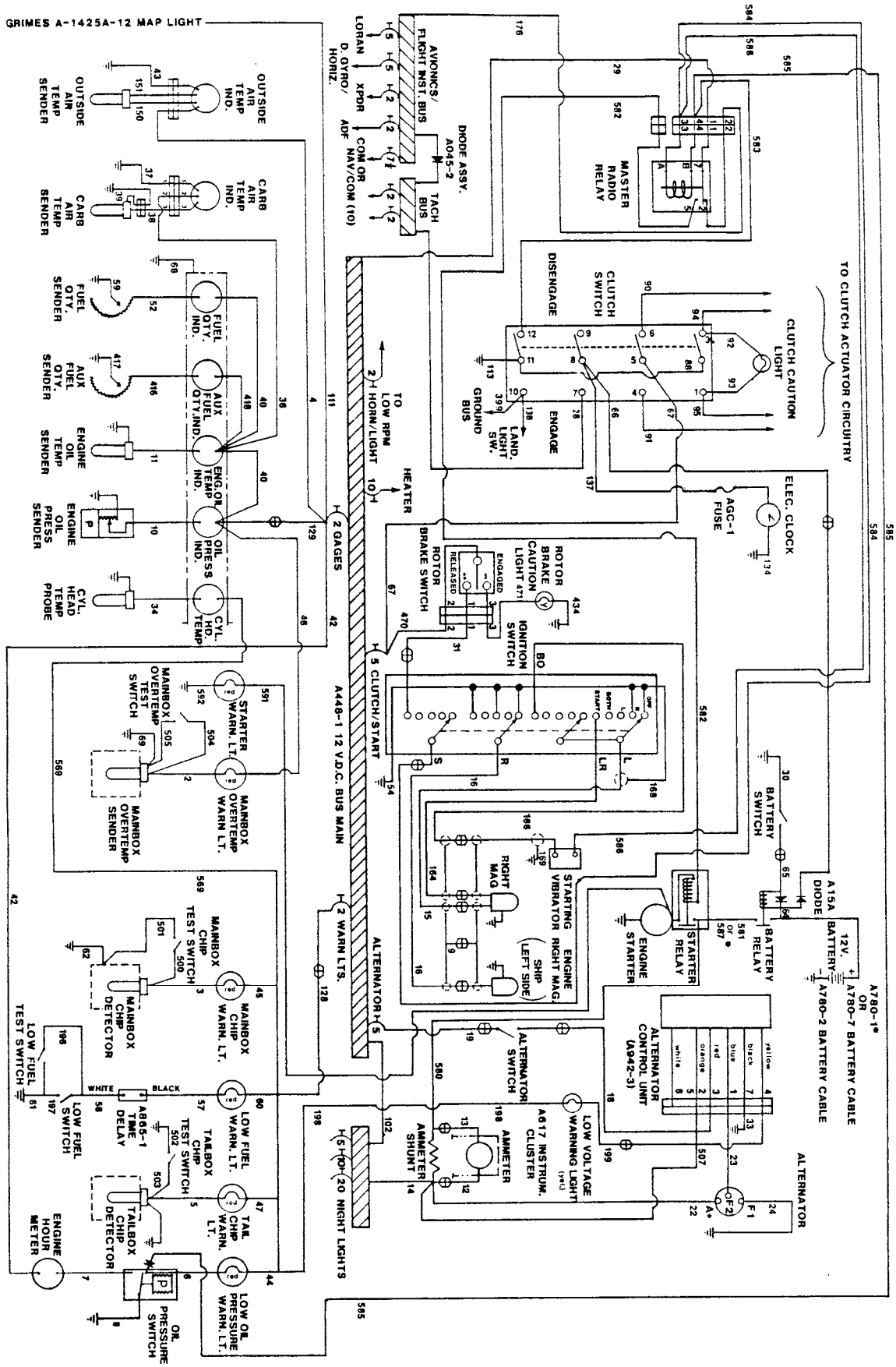

FIGURE 14-21 ELECTRICAL SYSTEM SCHEMATIC (IGNITION VIBRATOR) (S/N 1052, 1056, 1067, 1071, & 1085 AND ON.

*A780-1 and #587 wire used with nose battery installation.

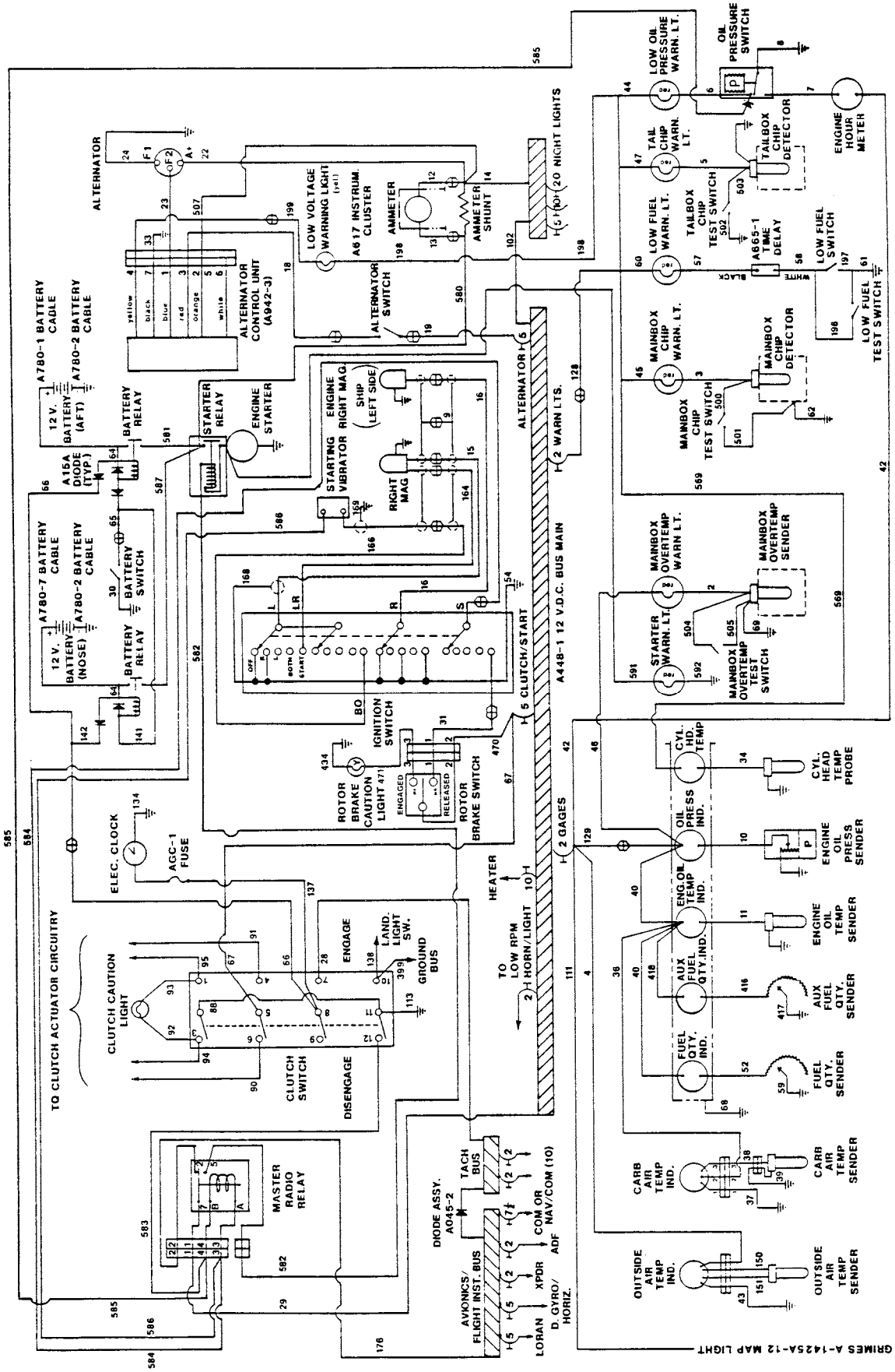

FIGURE 14-J ELECTRICAL SYSTEM SCHEMATIC - DUAL BATTERY PROVISION (IGNITION VIBRATOR) (S/N 1085 & ON)

14.600 (cont'd)

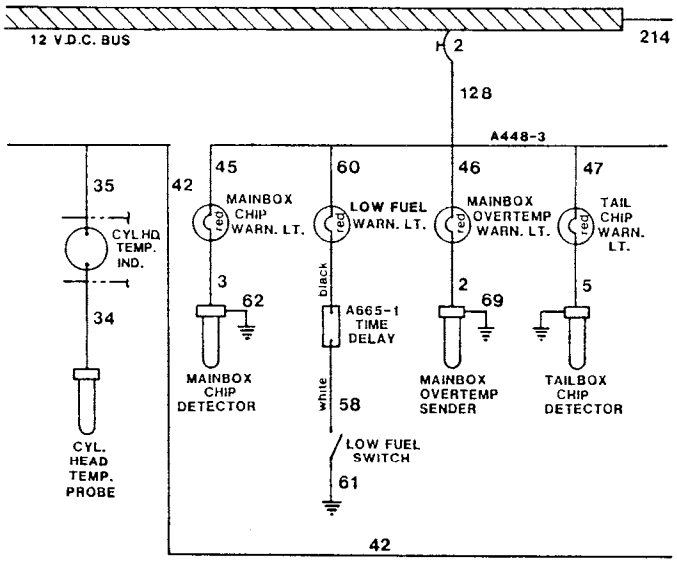

FIGURE 14-2K

M.R. GEARBOX OVERTEMP LIGHT ON 2 AMP WARNING LIGHT BREAKER

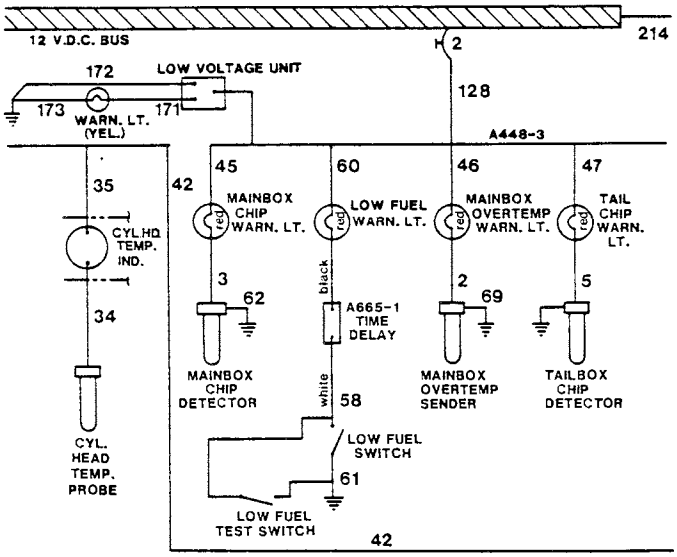

FIGURE 14-2L

M.R. GEARBOX OVERTEMP LIGHT ON 2 AMP WARNING LIGHT BREAKER

LOW VOLTAGE UNIT ON THE 2 AMP WARNING LIGHT BREAKER

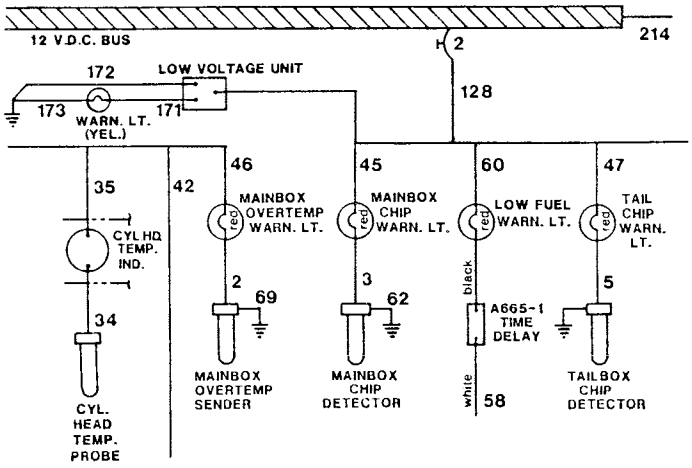

FIGURE 14-2M

M.R. GEARBOX OVERTEMP LIGHT ON 2 AMP GAGES BREAKER

LOW VOLTAGE UNIT ON THE 2 AMP WARNING LIGHT BREAKER

14.600 ELECTRICAL SYSTEM SCHEMATICS (Cont'd)

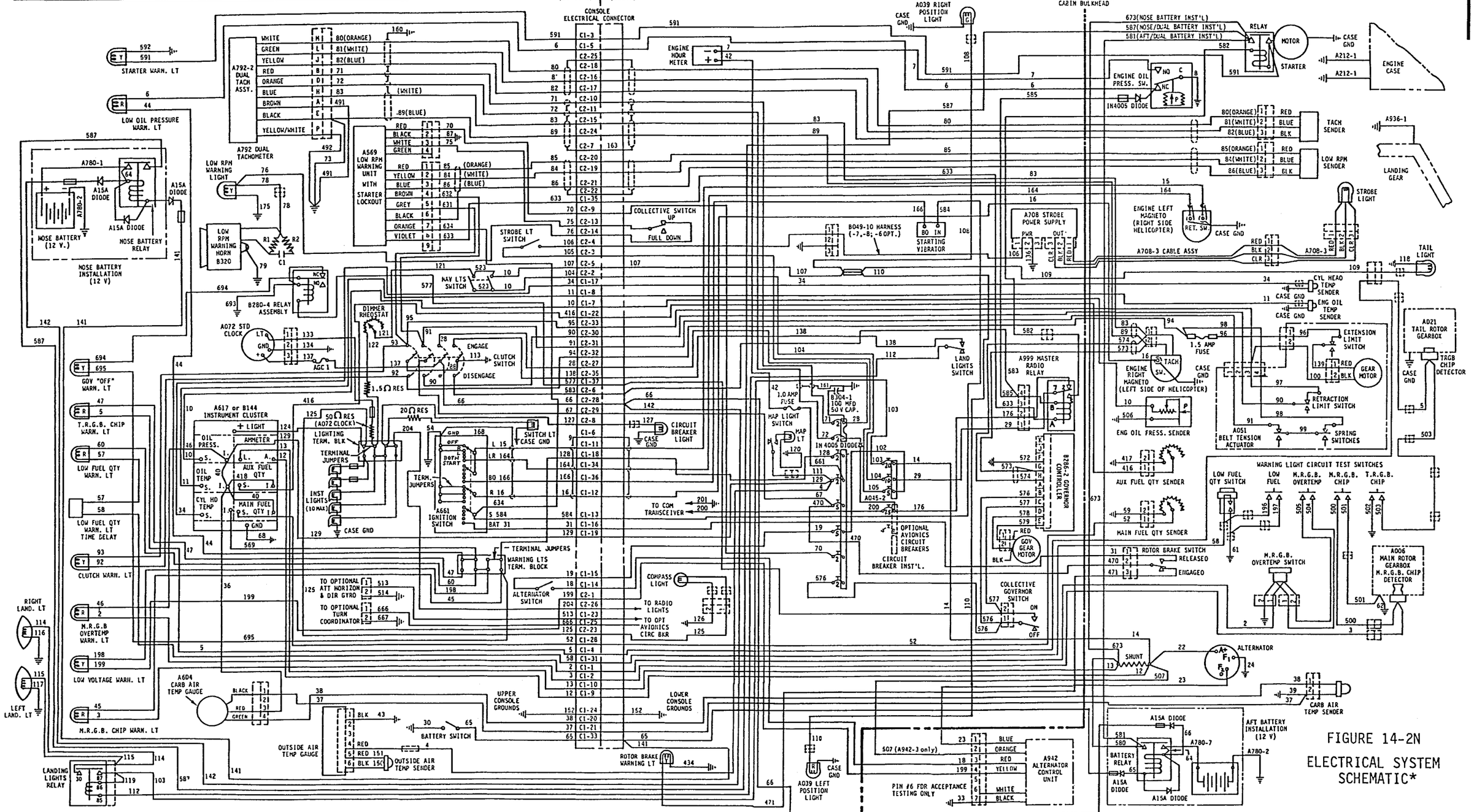

FIGURE 14-2N
ELECTRICAL SYSTEM SCHEMATIC*

*Ship S/N 2115 thru 2588; ships retrofitted with A569-5 low-rotor RPM warning unit having starter lock-out feature enabled (unit's 9-pin connector connected to airframe wiring). See Figure 14-2P if fuseblock is installed on aft side of left vertical firewall.

14.600 ELECTRICAL SYSTEM SCHEMATICS (cont'd)

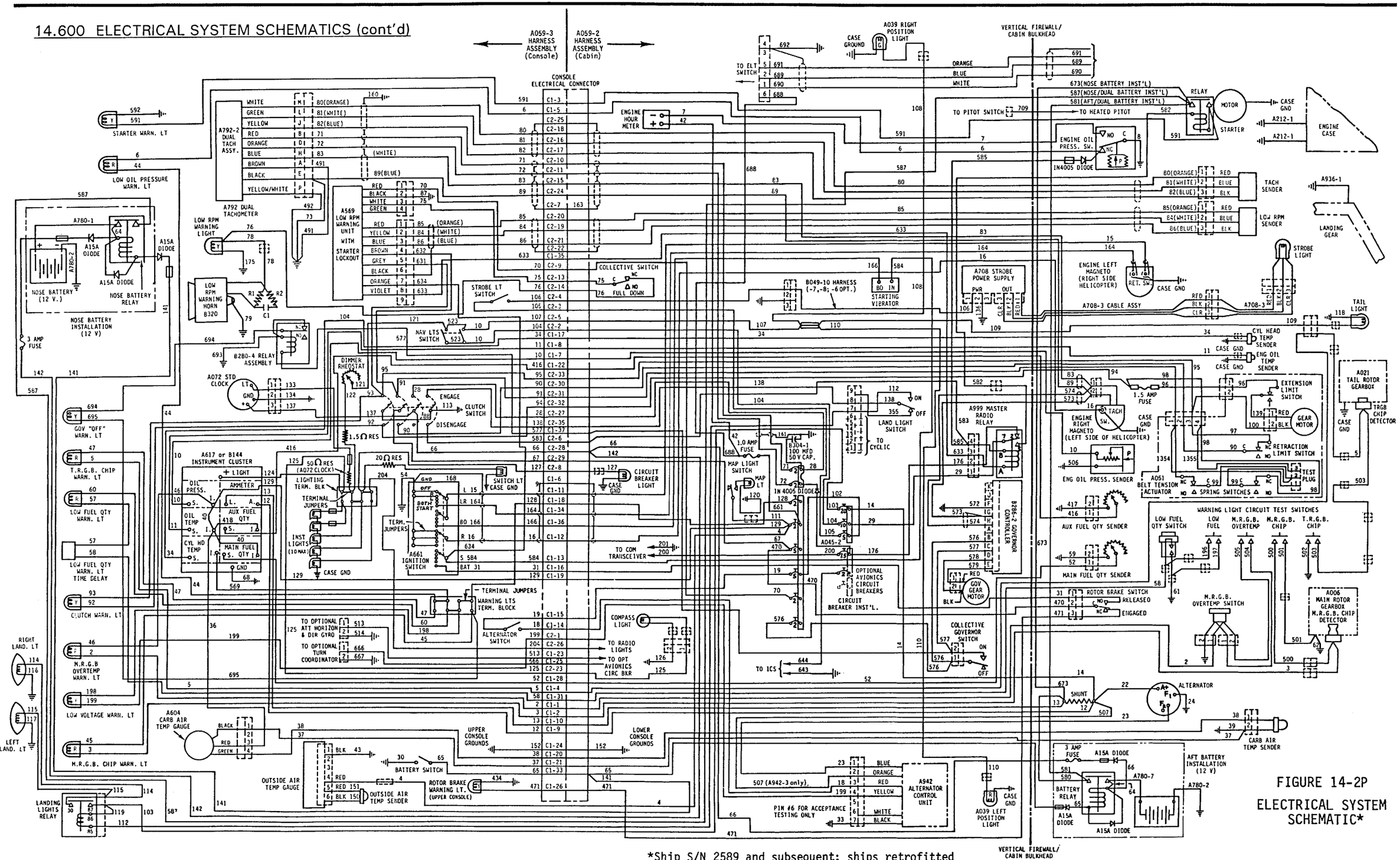

FIGURE 14-2P

ELECTRICAL SYSTEM SCHEMATIC*

*Ship S/N 2589 and subsequent; ships retrofitted with fuseblock installed on aft side of left vertical firewall.

14.600 (cont'd)

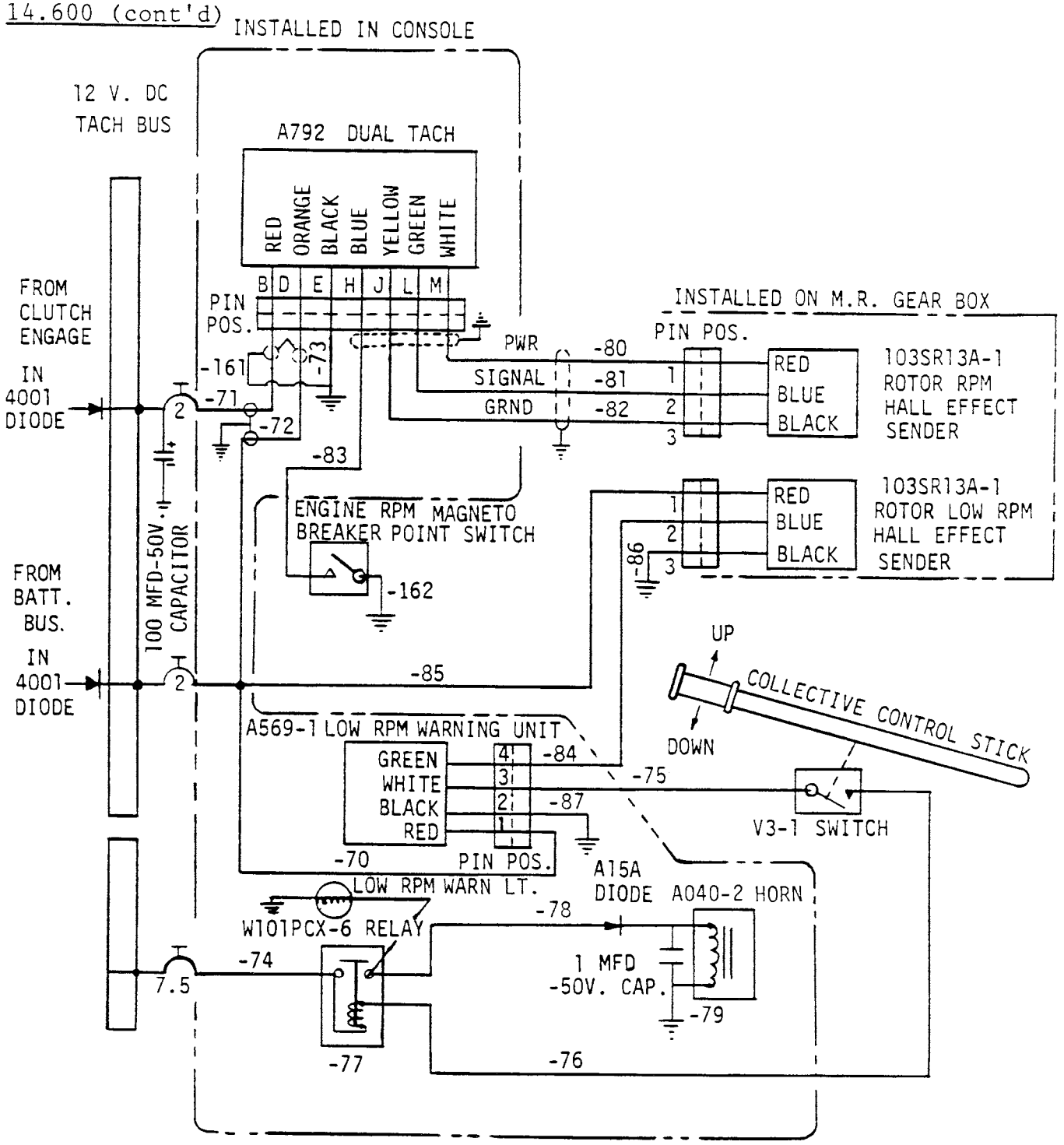

FIGURE 14-3 TACHOMETER AND LOW RPM WARNING HORN SCHEMATIC
(A/C S/N 002 thru 223)

14.600 (cont'd)

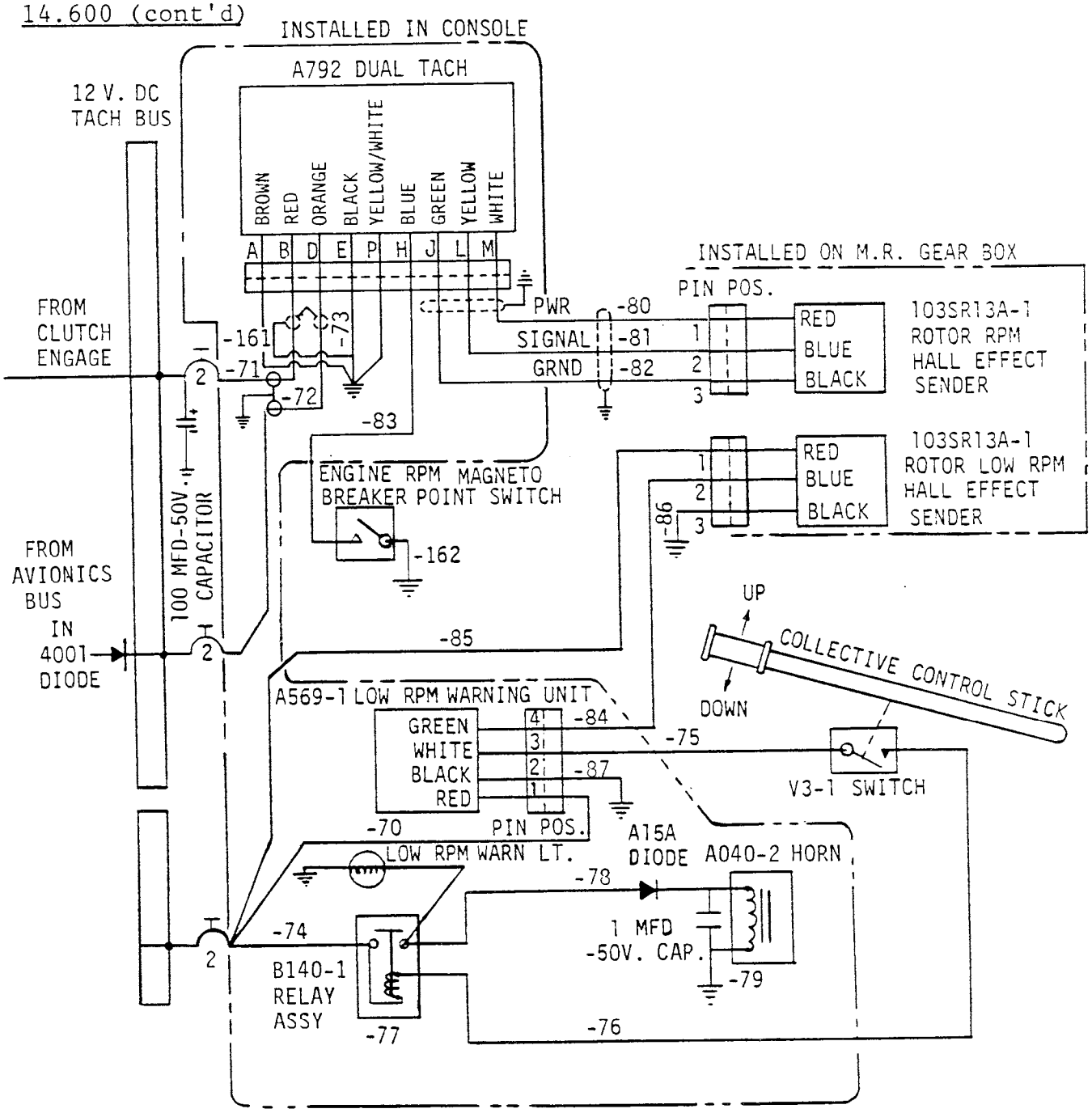

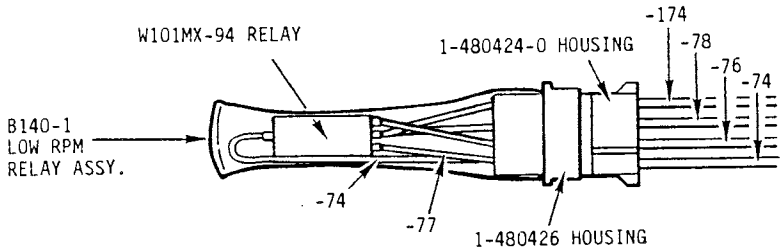

FIGURE 14-3A TACHOMETER AND LOW RPM WARNING HORN SCHEMATIC (A/C 224 AND SUB. INCLUDING A/C RETROFITTED WITH A942 ALTERNATOR CONTROL UNIT)

14.600 ELECTRICAL SYSTEM SCHEMATICS (Cont'd)

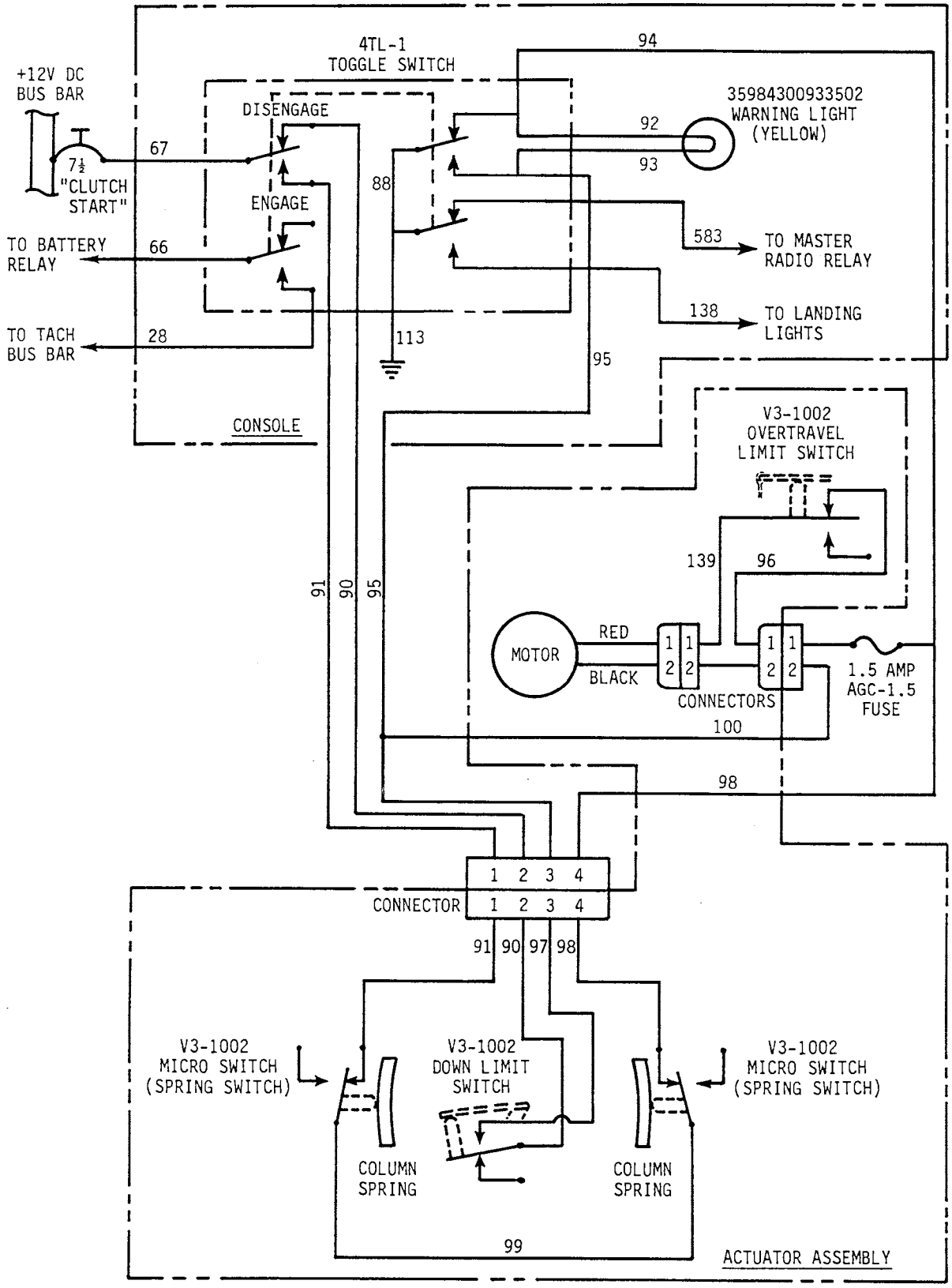

FIGURE 14-4 BELT TENSION ACTUATOR SCHEMATIC
(WITHOUT TEST PLUG; SHOWN FULLY DISENGAGED)

14.600 ELECTRICAL SYSTEM SCHEMATICS (Cont'd)

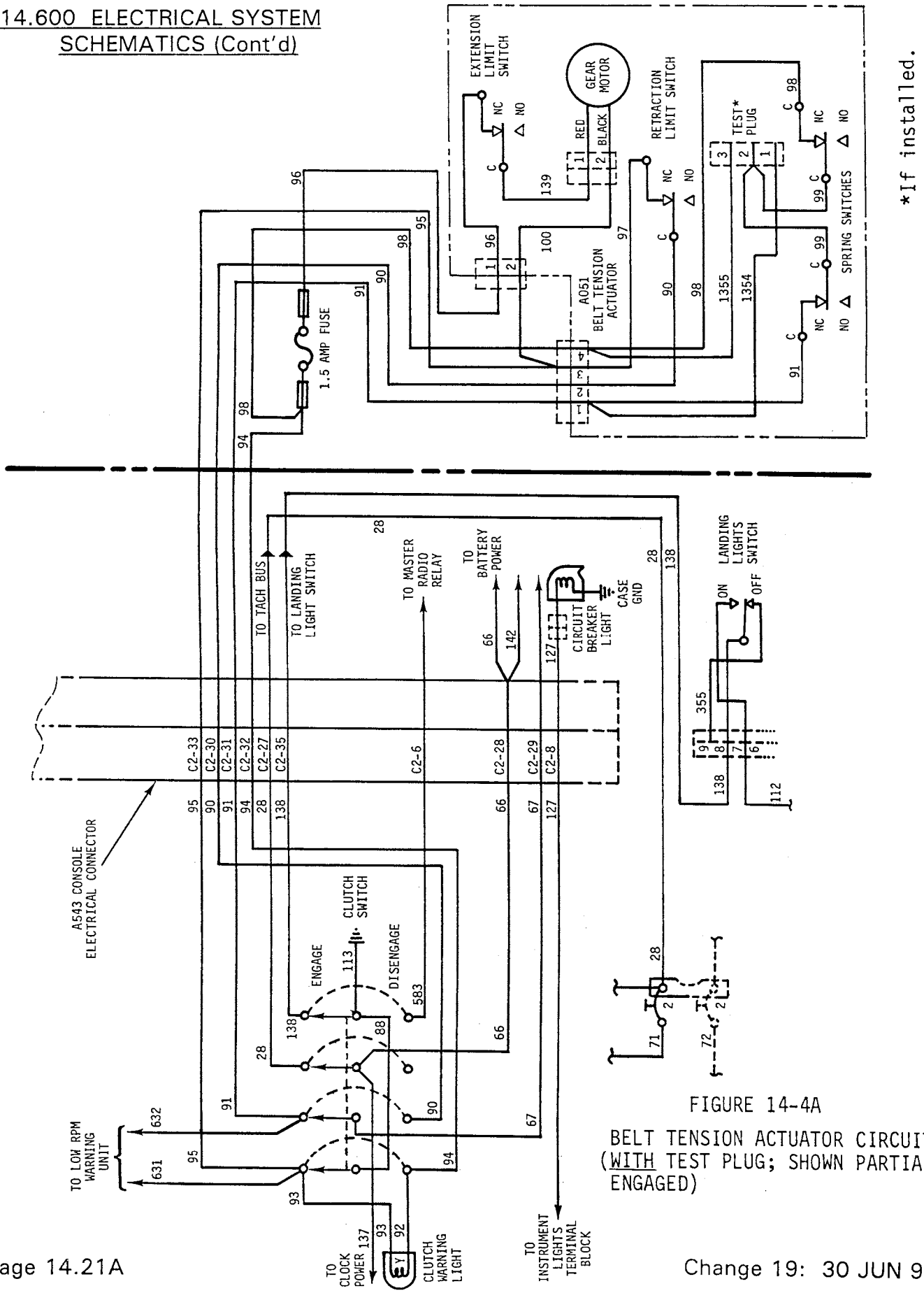

FIGURE 14-4A

BELT TENSION ACTUATOR CIRCUIT (WITH TEST PLUG; SHOWN PARTIALLY ENGAGED)

Intentionally blank.

14.600 (cont'd)

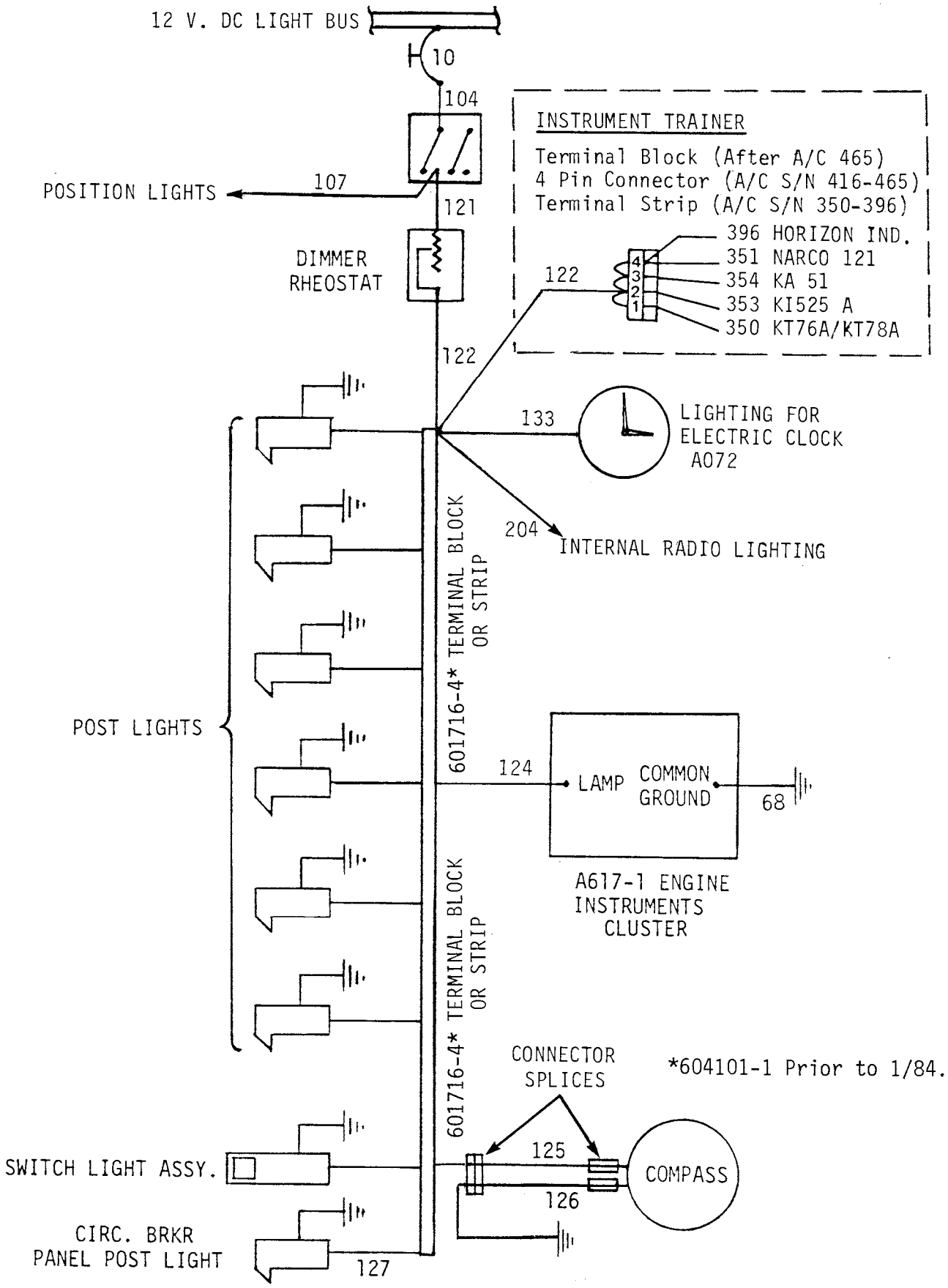

FIGURE 14-5 INSTRUMENT LIGHTING SCHEMATIC

14.600 ELECTRICAL SYSTEM SCHEMATICS (Cont'd)

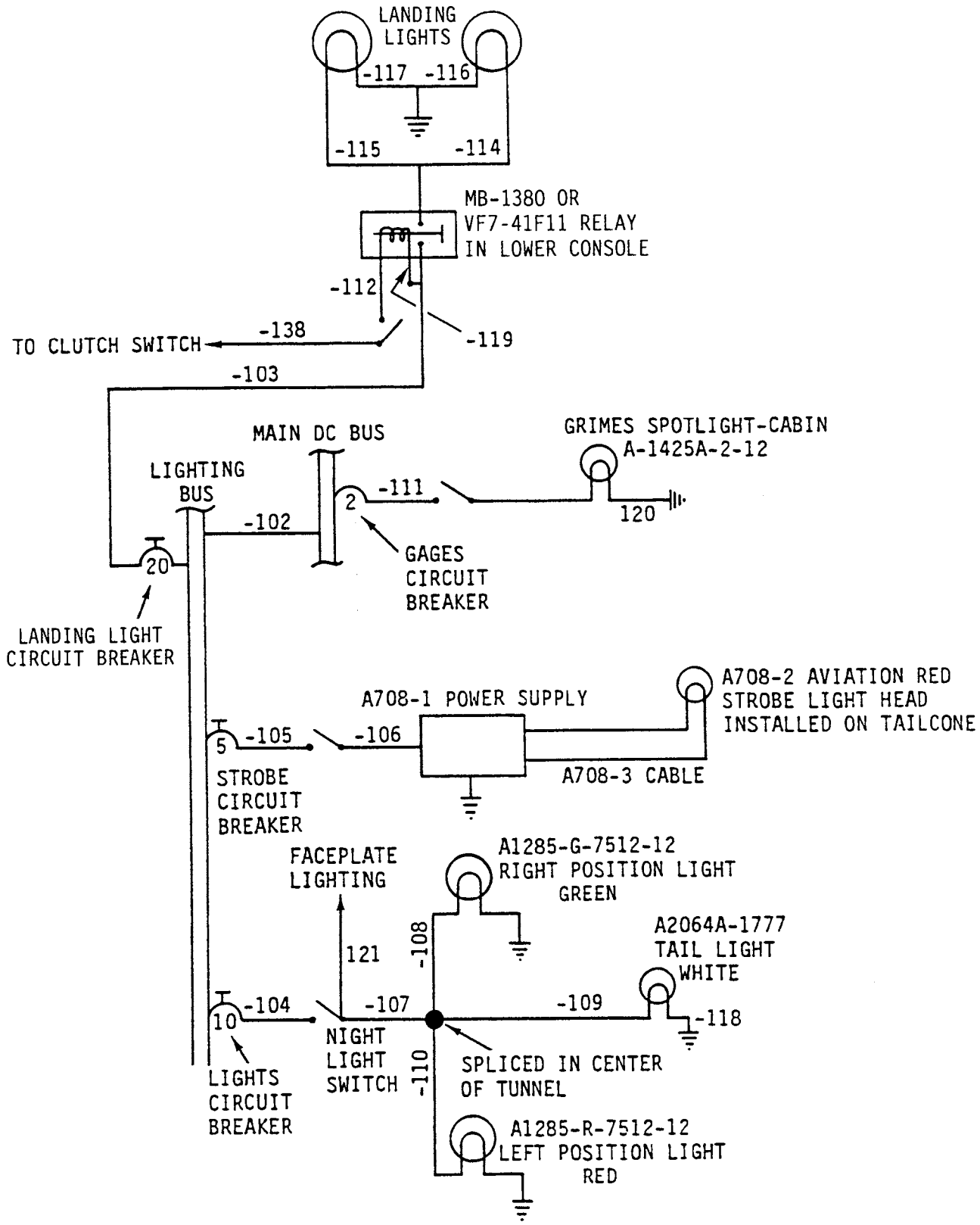

FIGURE 14-5A NIGHT LIGHTING SCHEMATIC

14.600 (cont'd)

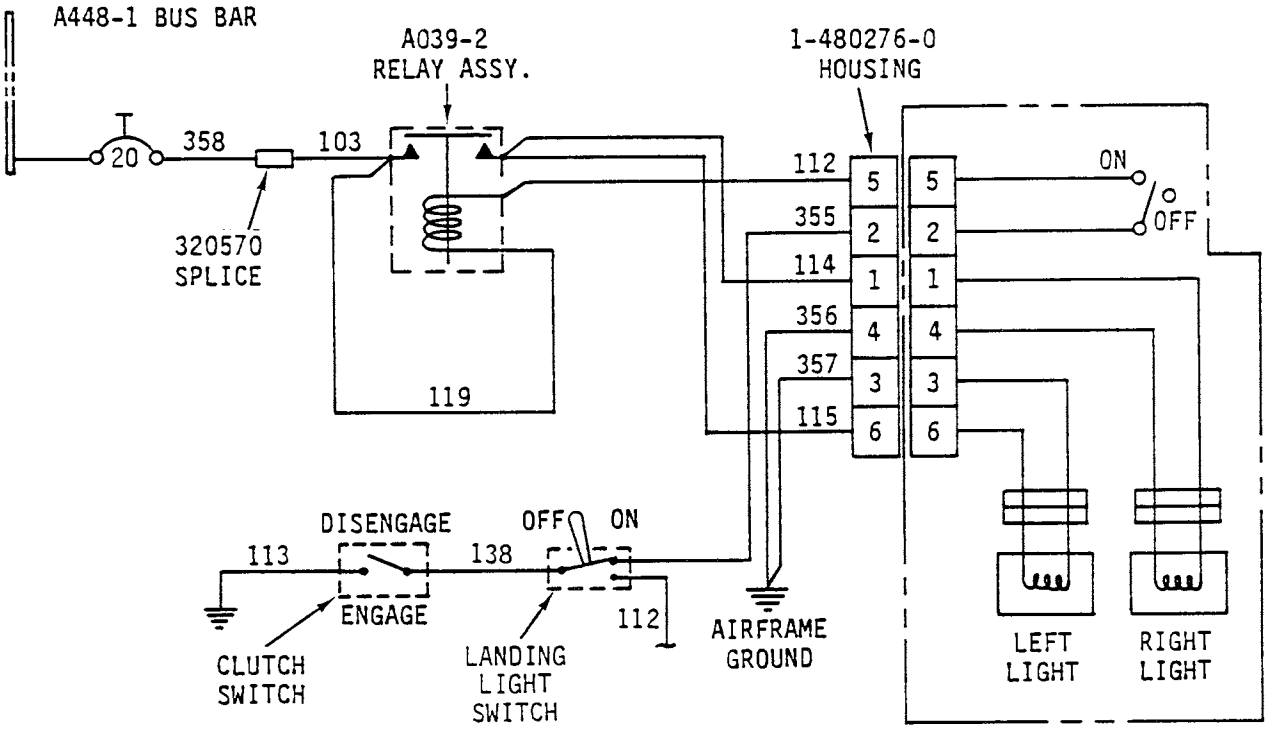

FIGURE 14-6 WIRING SCHEMATIC FOR SEARCHLIGHT (A081)

14.600 (cont'd)

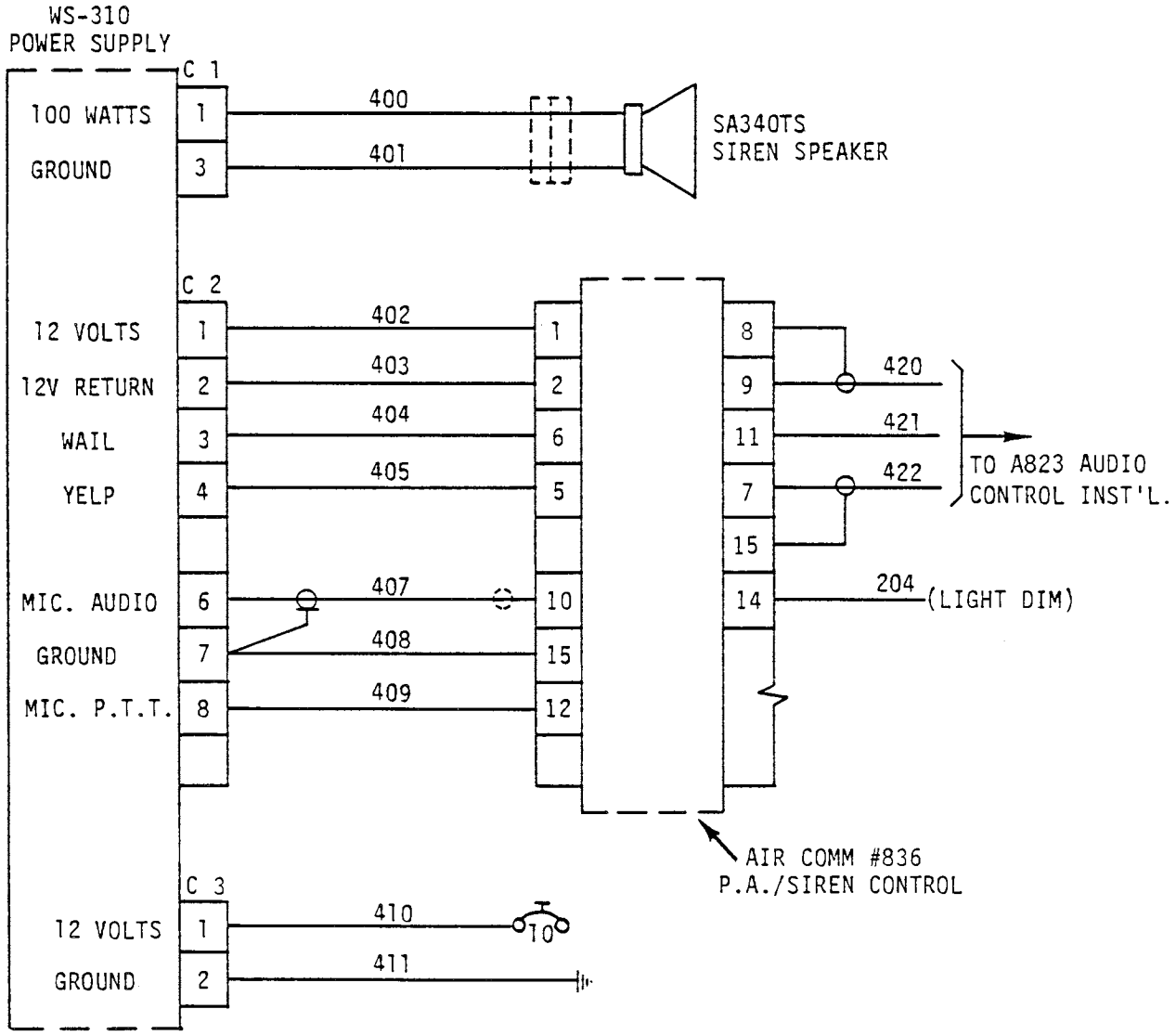

FIGURE 14-6A P.A. SIREN WIRING SCHEMATIC (A079-1)

14.600 ELECTRICAL SYSTEM SCHEMATICS (Cont'd)

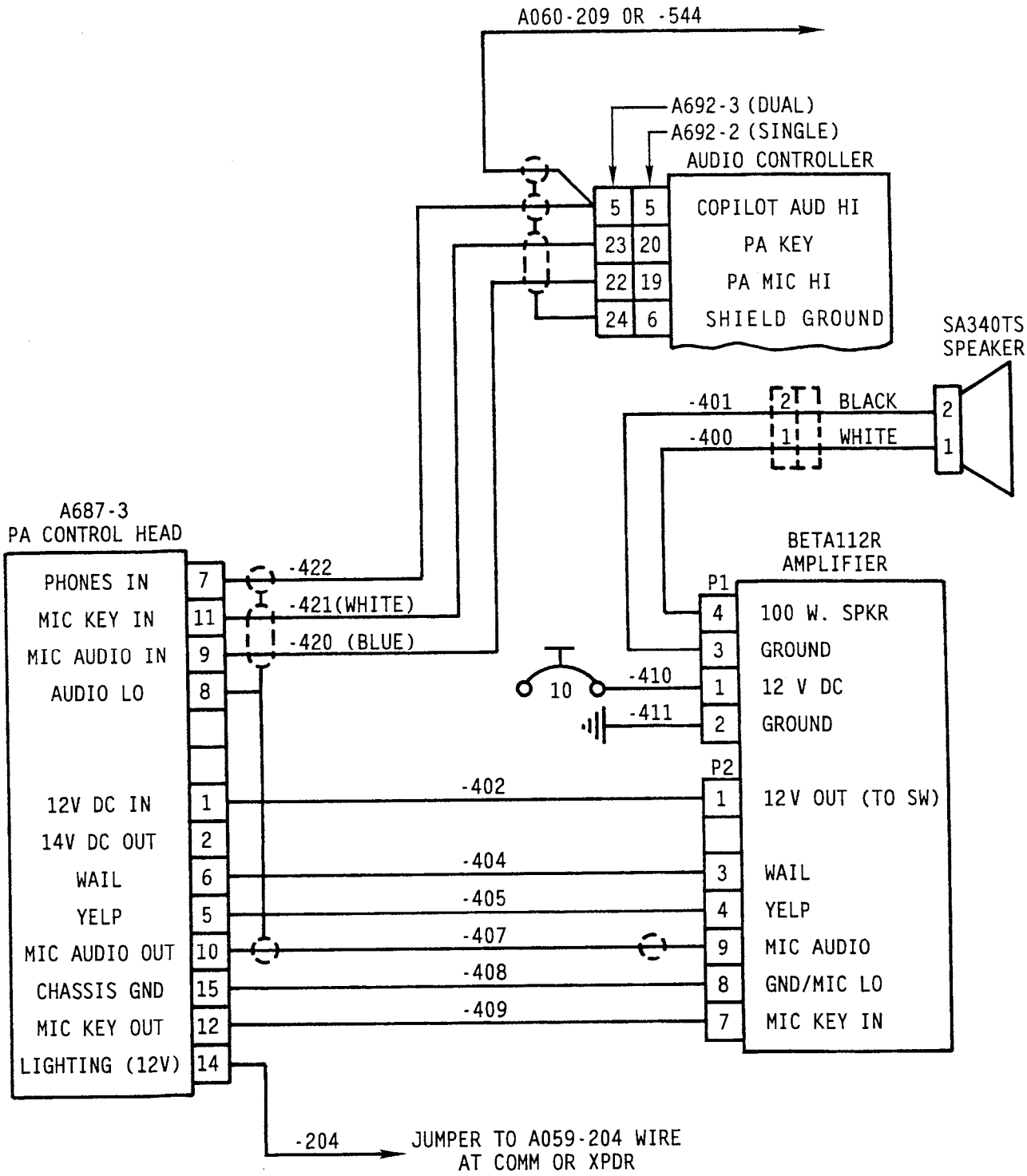

FIGURE 14-6B

P.A. SIREN SYSTEM SCHEMATIC (A079-1) (WITH AUDIO CONTROL)

14.600 ELECTRICAL SYSTEM SCHEMATICS (Cont'd)

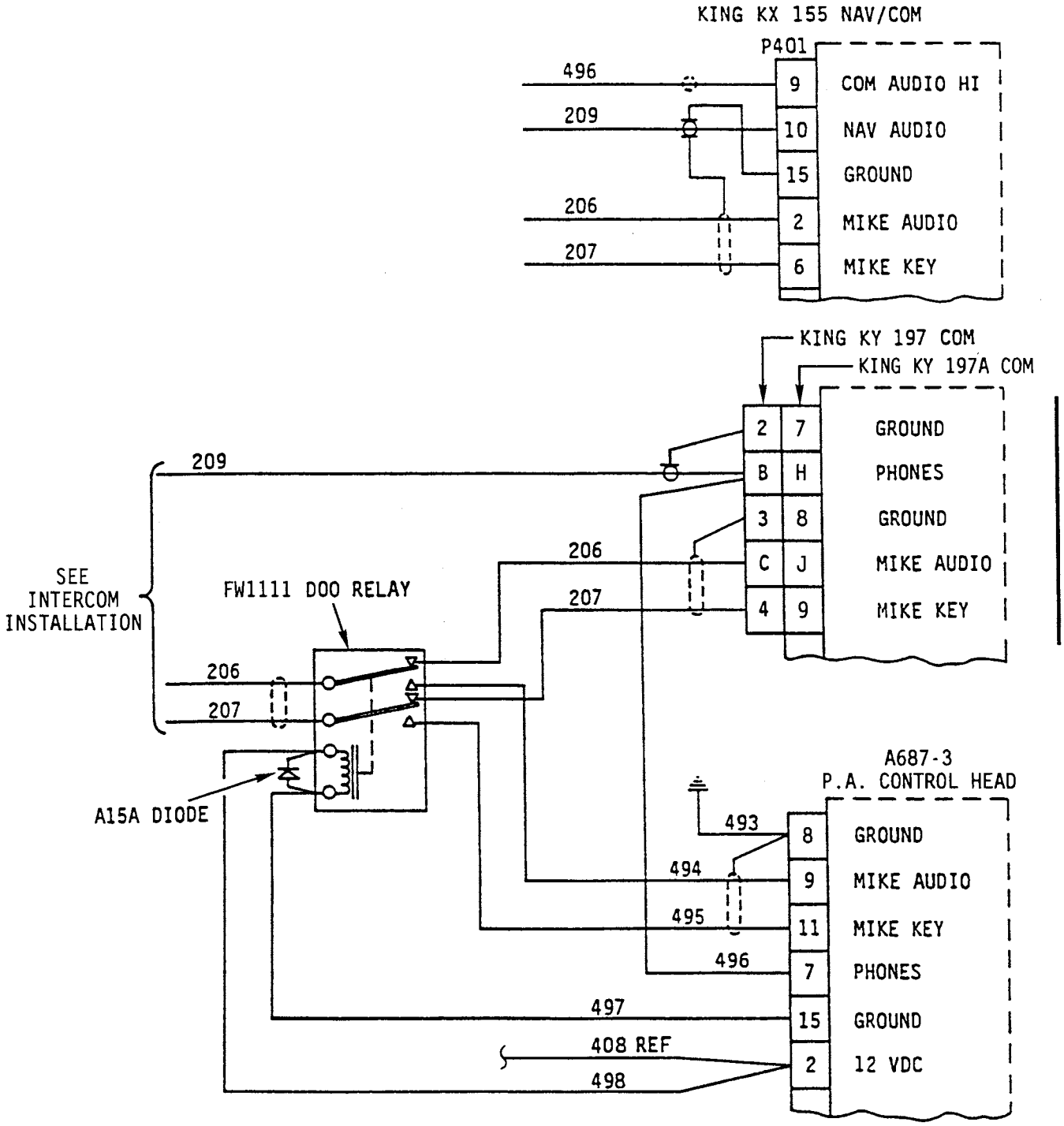

FIGURE 14-6C

P.A. SIREN SYSTEM SCHEMATIC (A079-2)
(WITH KING KX 155 OR KY 197)

14.600 ELECTRICAL SYSTEM SCHEMATICS (Cont'd)

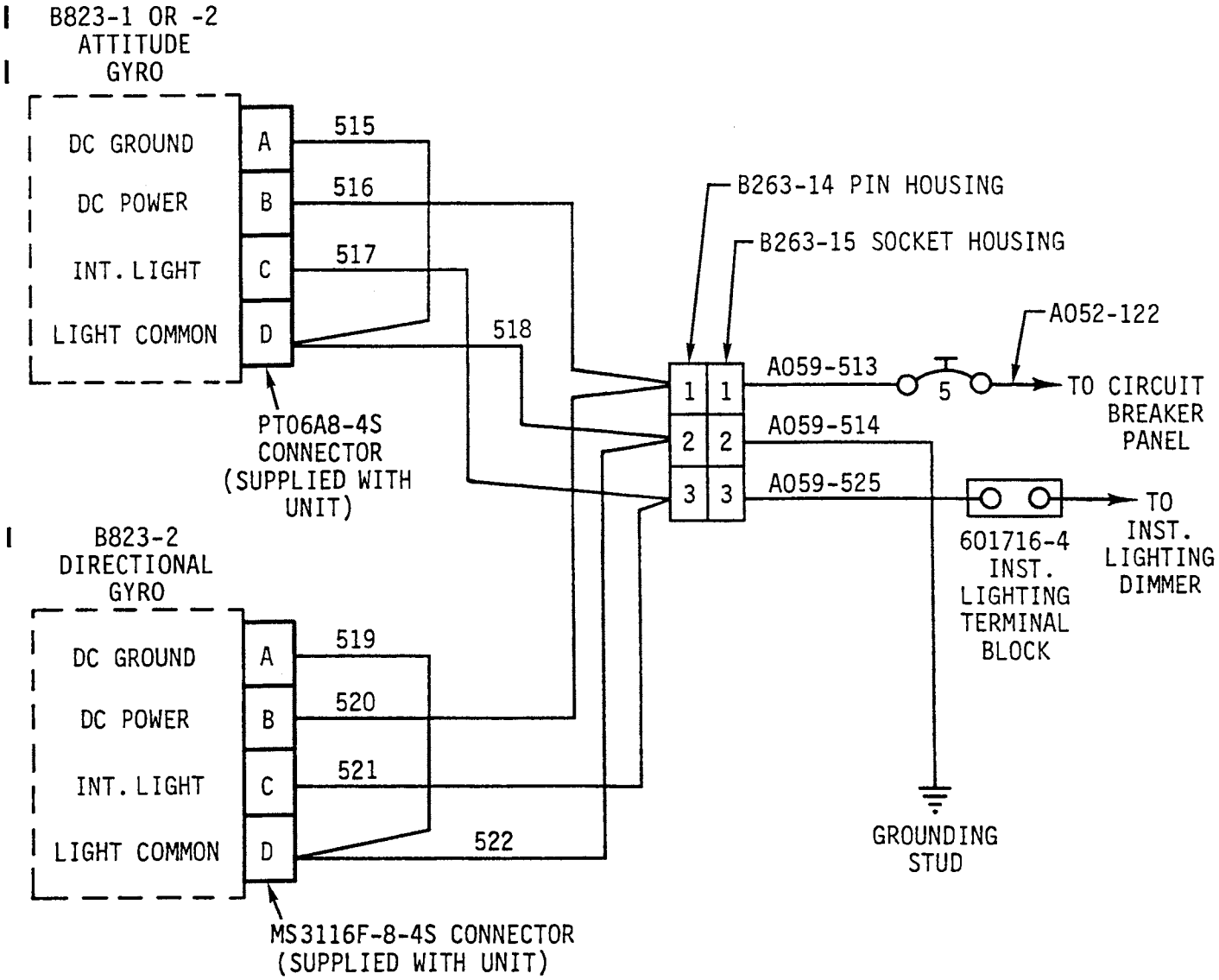

FIGURE 14-6D

ATTITUDE GYRO AND DIRECTIONAL GYRO INSTALLATION

14.600 ELECTRICAL SYSTEM SCHEMATICS (Cont'd)

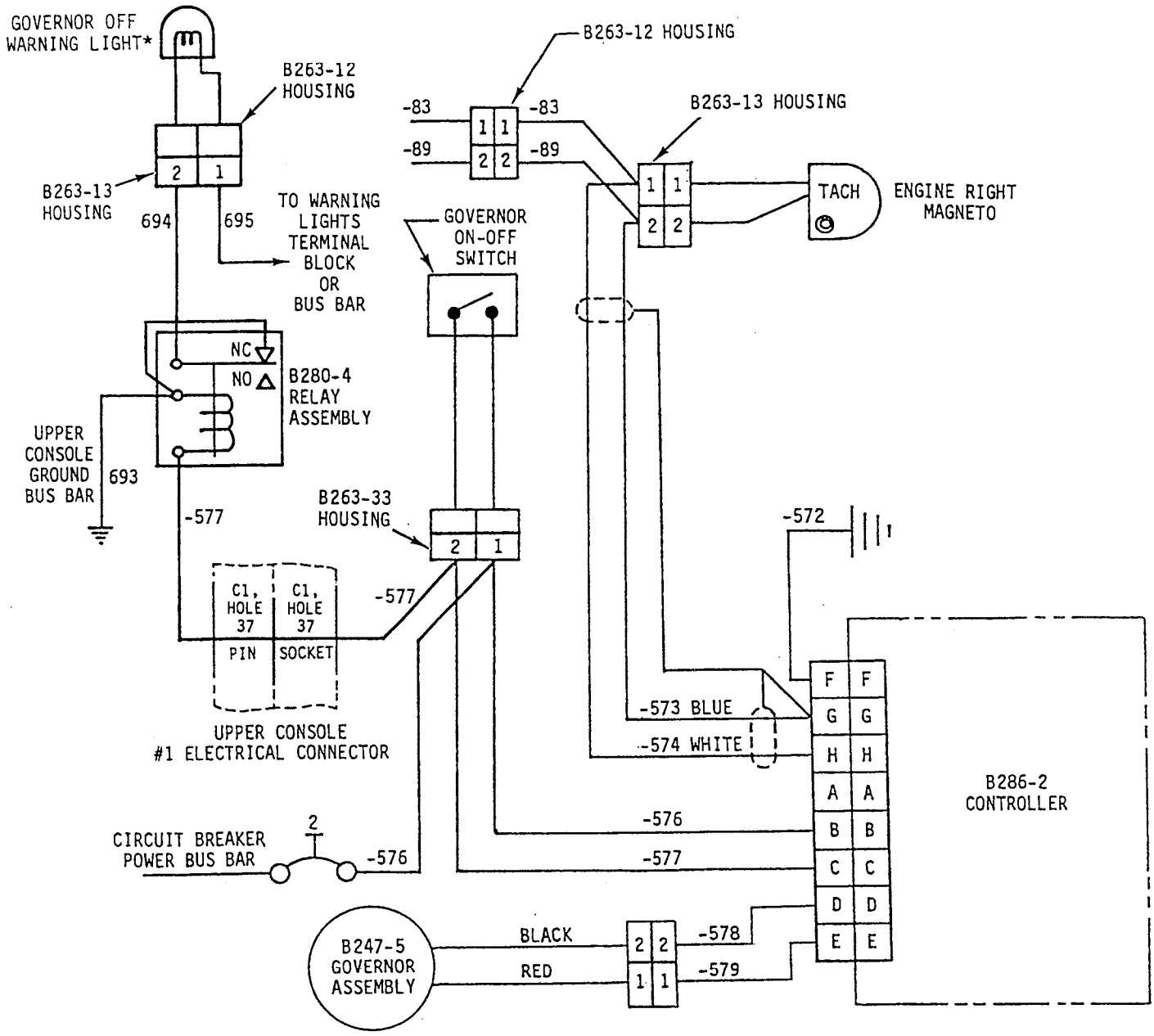

*IF NOT INSTALLED, GOVERNOR OFF WARNING LIGHT MAY BE ADDED USING KI-100 KIT.

FIGURE 14-6E

GOVERNOR SYSTEM SCHEMATIC

14.600 ELECTRICAL SYSTEM SCHEMATICS (Cont'd)

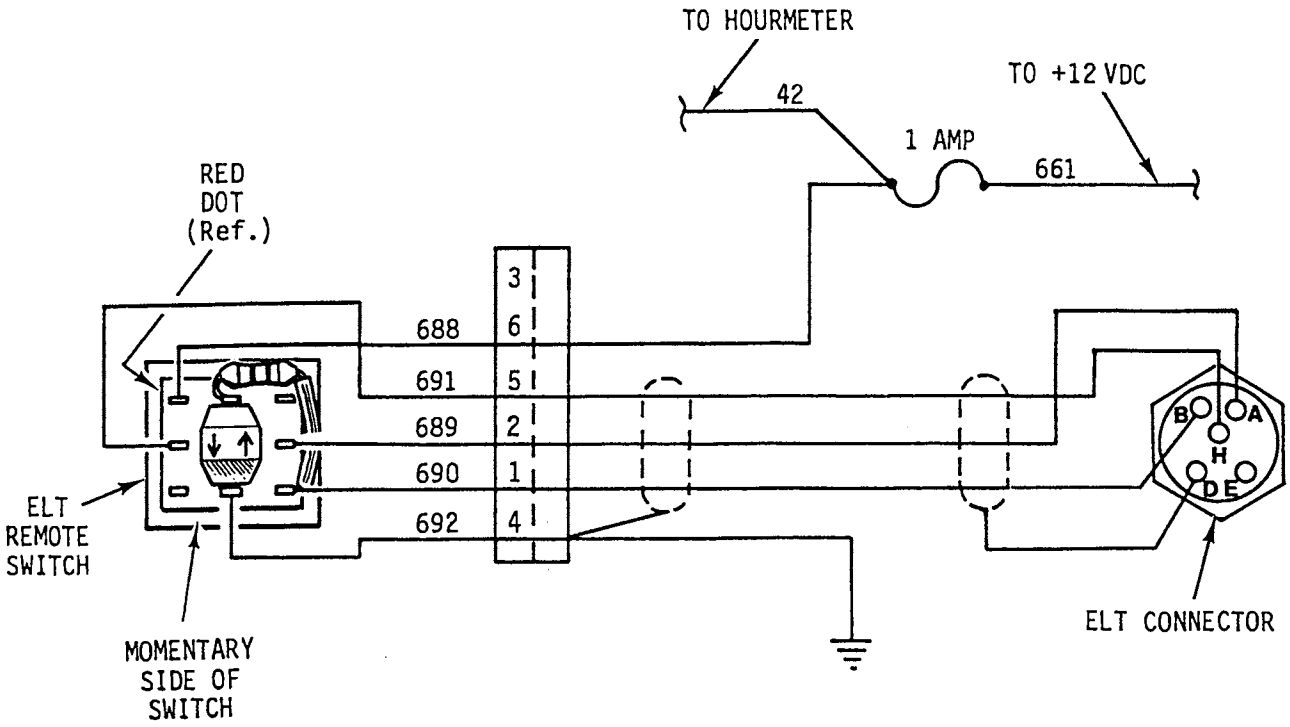

FIGURE 14-6F

ELT REMOTE SWITCH WIRING SCHEMATIC

14.700 Antenna Locations

NO.	ANTENNA	PART NO.
1	NAV	CI 259
	NAV	CI 259E (W/DIPLEXER)
2	RH Belly VHF	CI 292-3
	RH Belly UHF	CI 177-20
	RH Belly UHF	CI 273 OR CI 271
	RH Belly COM	CI 122
	RH Belly UHF	CI 272-1
3	LH Belly VHF	CI 292-3
	LH Belly UHF	CI 177-20
	LH Belly UHF	CI 273 OR CI 271
4	Marker Beacon	CI 102
5	Transponder	CI 105-16 OR KA60, FWD
	Transponder	CI 105-16 OR KA60, AFT
	DME	CI 105-16 OR KA60
6	ADF	KA44B
7	Cowling GPS	GA 29F
8	Fwd Tailcone COM	CI 121 or CI 248-5
	Fwd Tailcone GPS/COM	CI 2480-201
	Fwd Tailcone GPS/COM	CI 2580-200
9	RMS/GPS	910-00003-001
10	Aft Tailcone COM	CI 121 or CI 248-5
	Aft Tailcone GPS/COM	CI 2480-201
	Aft Tailcone GPS/COM	CI 2580-200

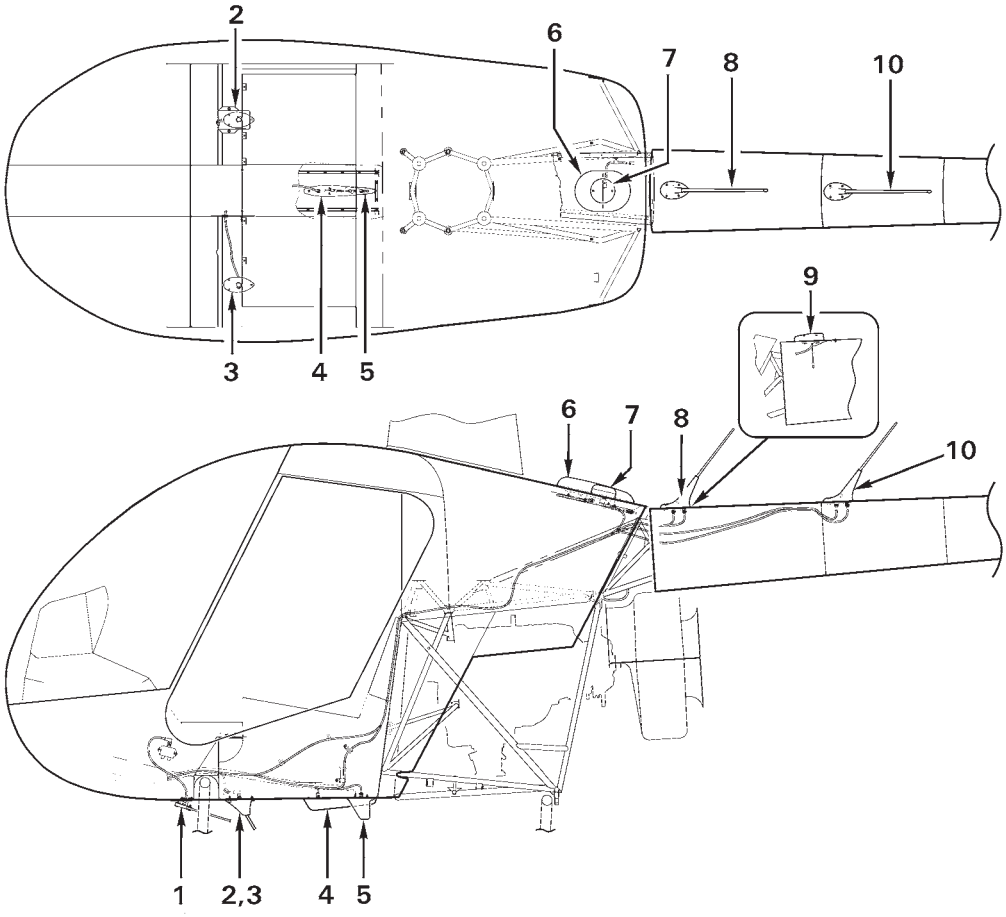

FIGURE 14-7 ANTENNA LOCATIONS

Intentionally Blank

14.800 AVIONICS SCHEMATICS

Basic communications wiring common to all the COM radio configurations include: Pilot and Co-Pilot cyclic stick switches (Transmit and Intercom), and an overhead COM box housing Pilot and Co-Pilot headphone jacks and relays. The intercom system operates through installed COM radio or audio selector panel.

14.800 (cont'd)

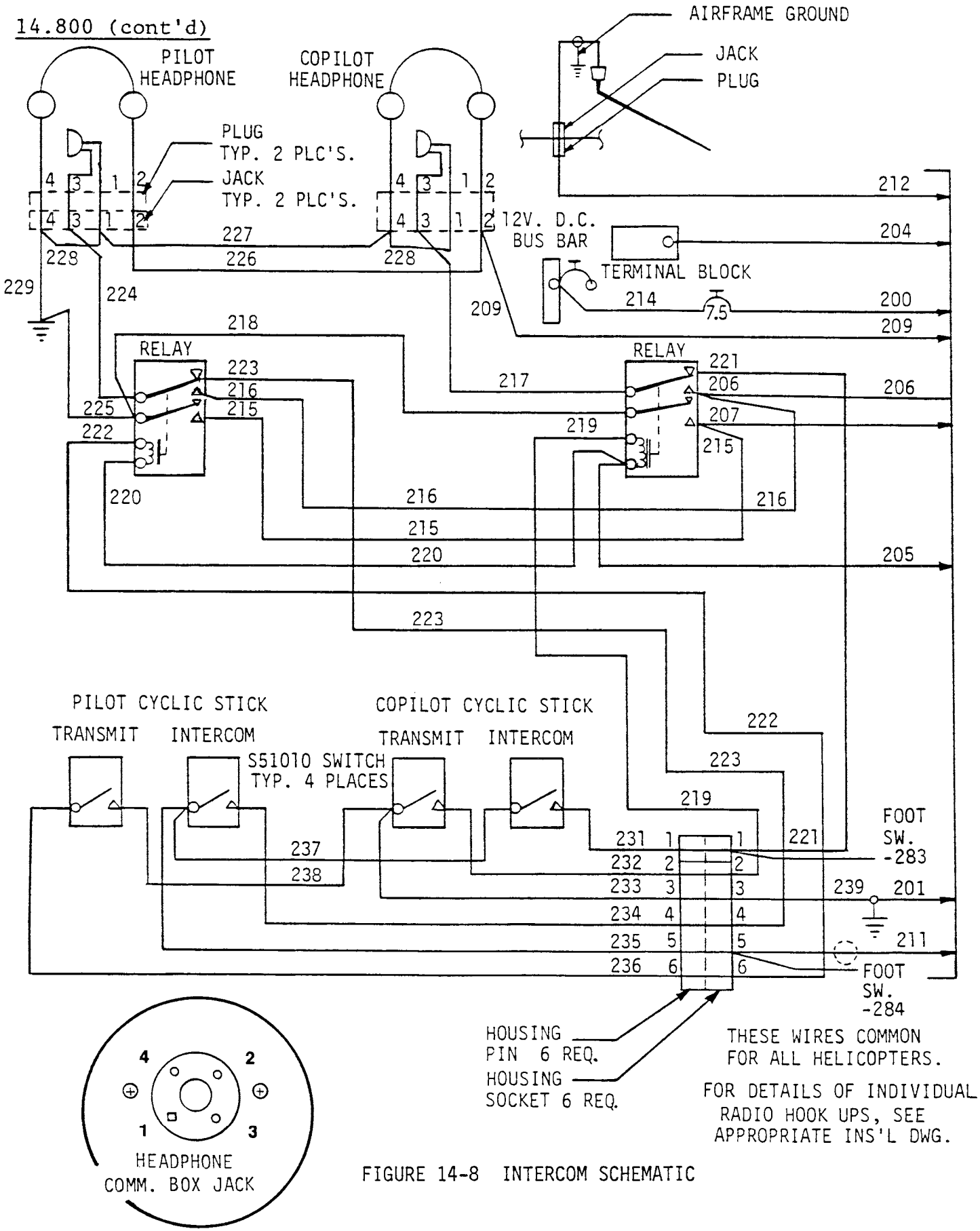

FIGURE 14-8 INTERCOM SCHEMATIC

14.800 (cont'd)

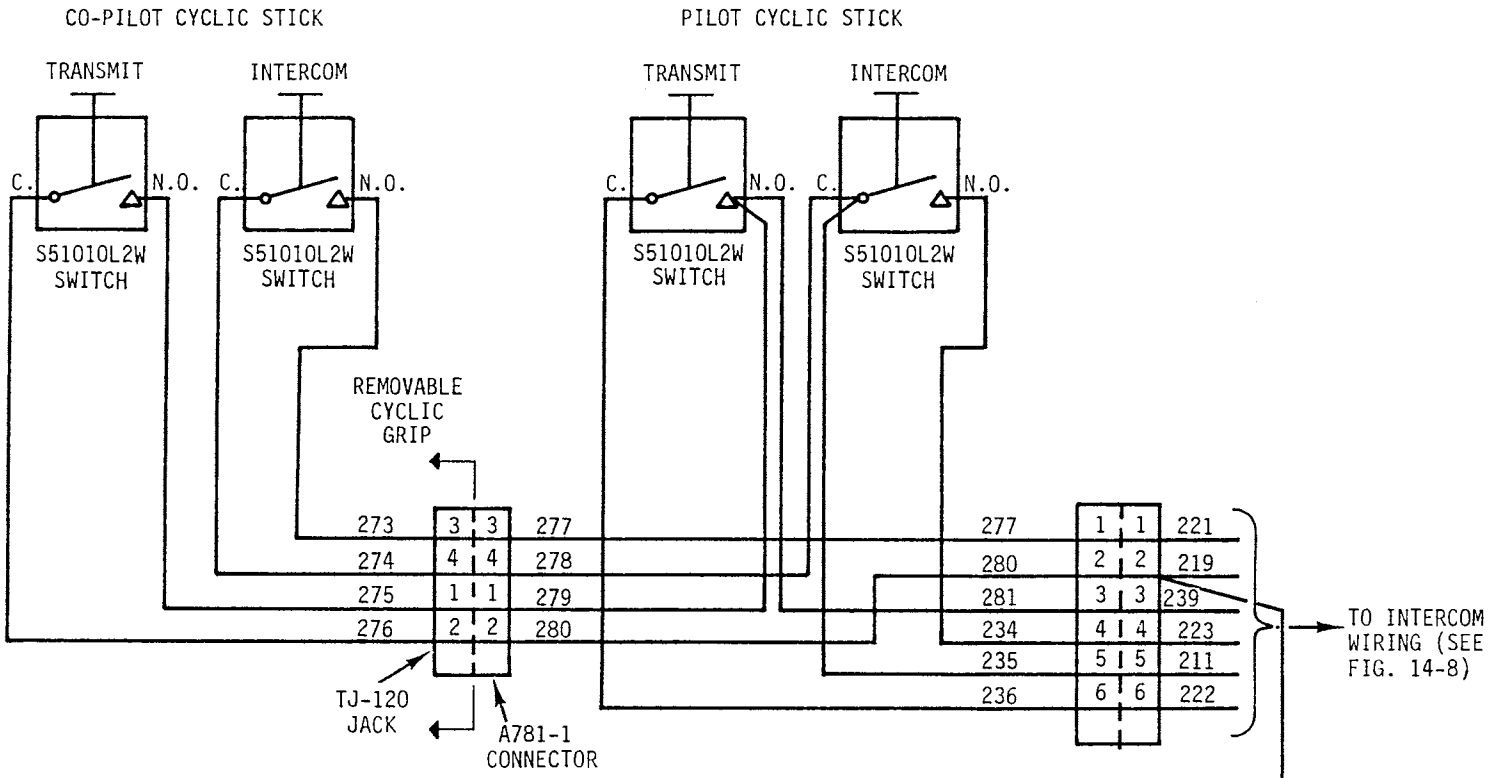

FIGURE 14-8A INTERCOM SCHEMATIC WITH REMOVABLE CYCLIC GRIP

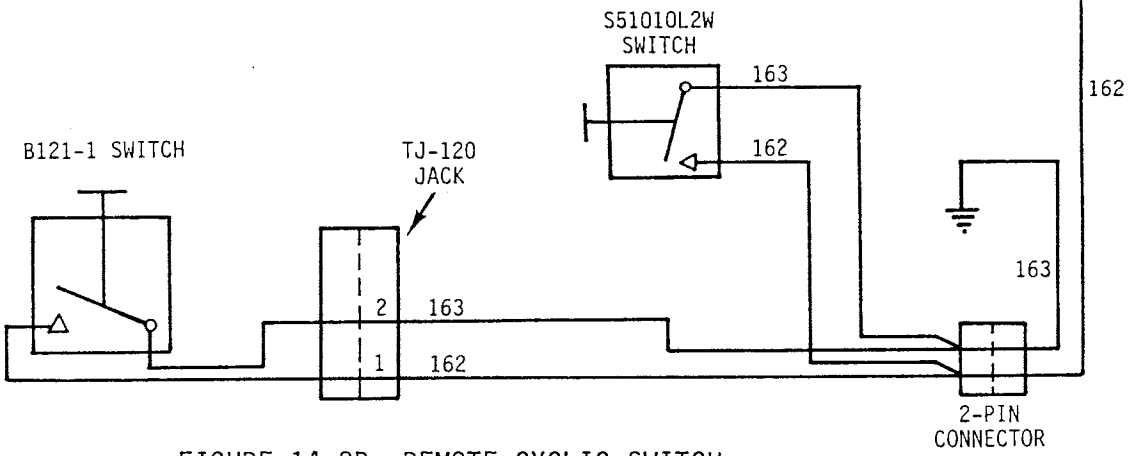

FIGURE 14-8B REMOTE CYCLIC SWITCH WIRING DIAGRAM (R22 MARINER)

14.800 AVIONICS SCHEMATICS (cont'd)

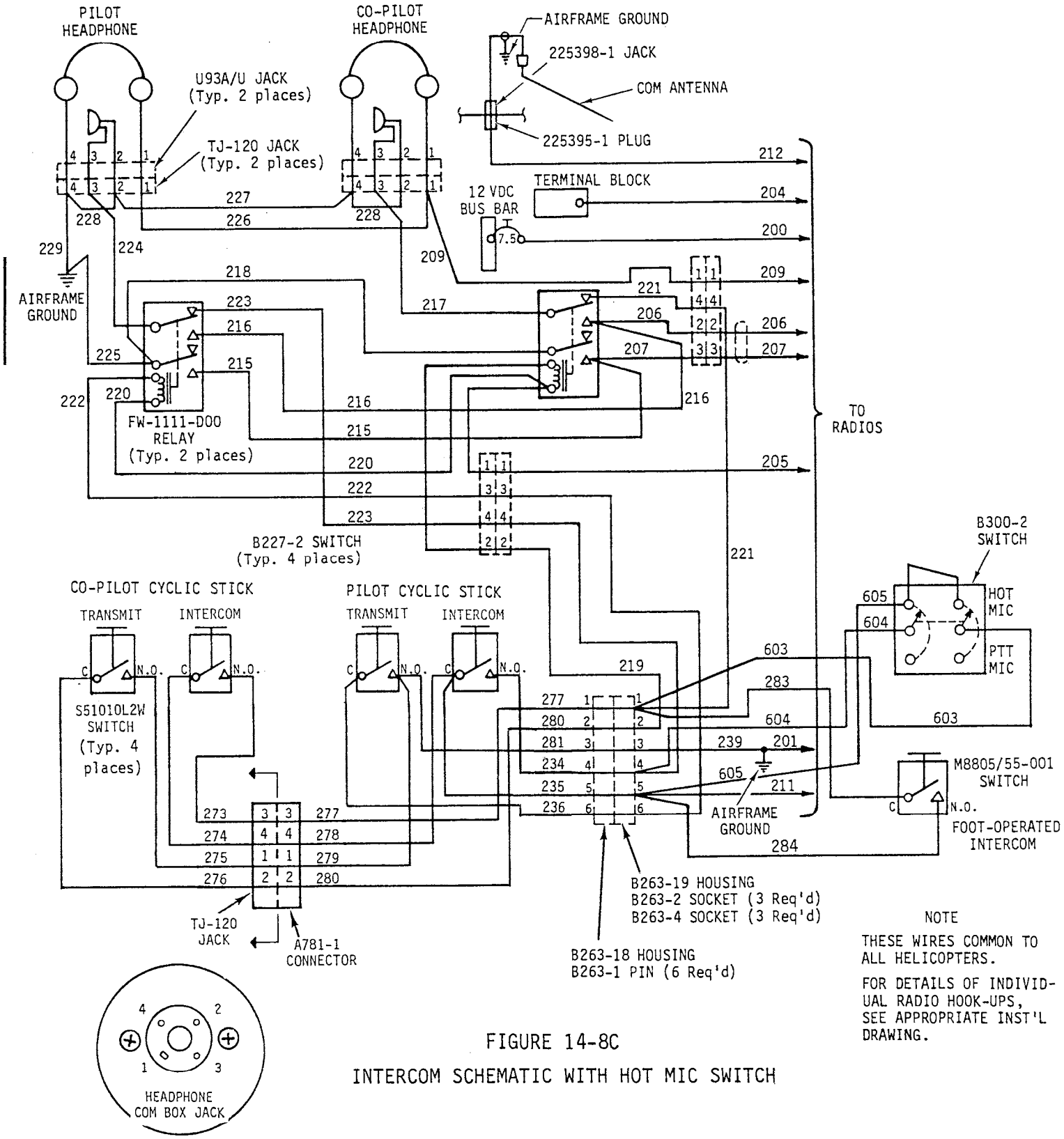

NOTE

THESE WIRES COMMON TO ALL HELICOPTERS.

FOR DETAILS OF INDIVIDUAL RADIO HOOK-UPS, SEE APPROPRIATE INST'L DRAWING.

FIGURE 14-8C

INTERCOM SCHEMATIC WITH HOT MIC SWITCH

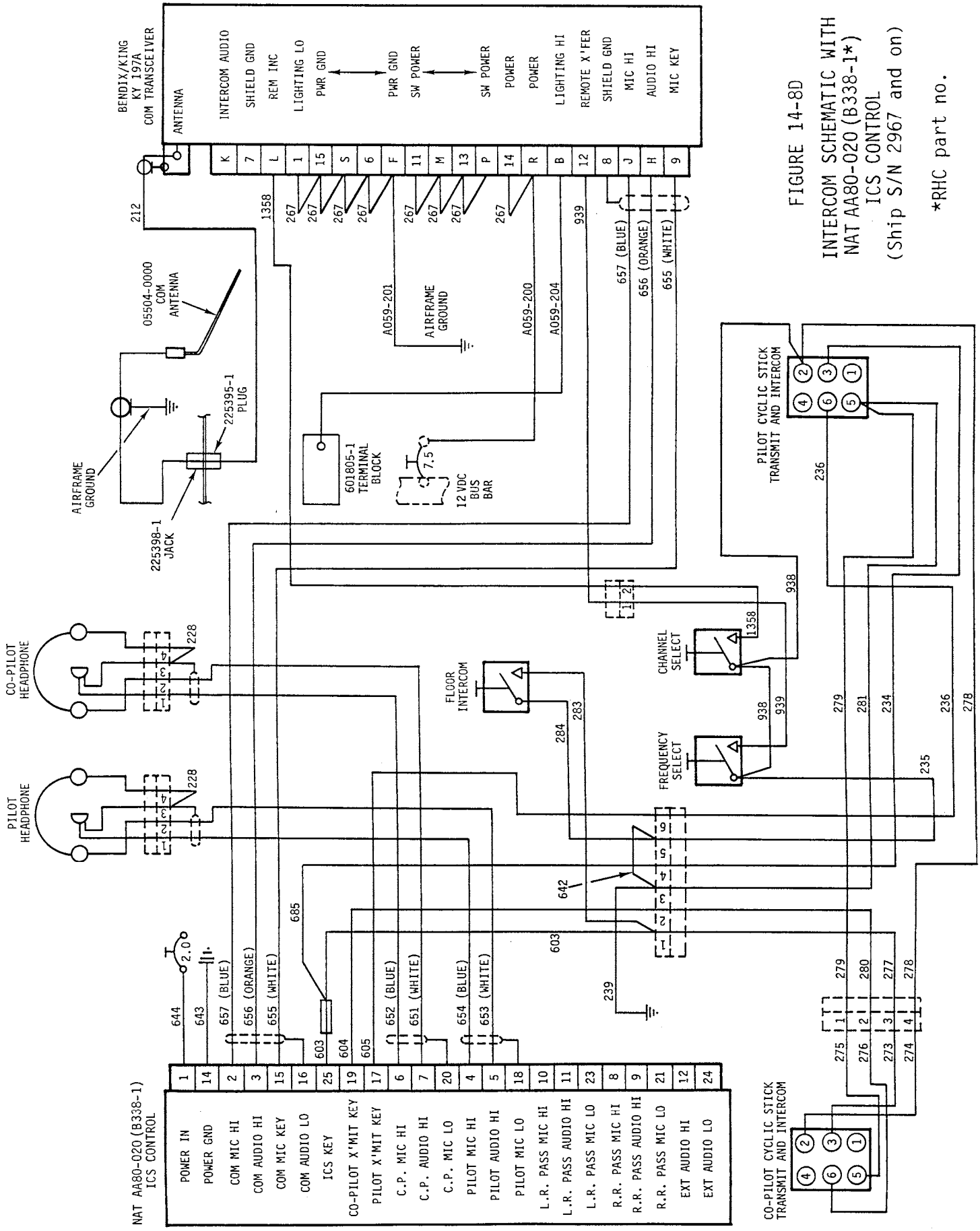

FIGURE 14-8D
INTERCOM SCHEMATIC WITH
NAT AA80-020 (B338-1*)
ICS CONTROL
(Ship S/N 2967 and on)

*RHC part no.

14.800 AVIONICS SCHEMATICS (cont'd)

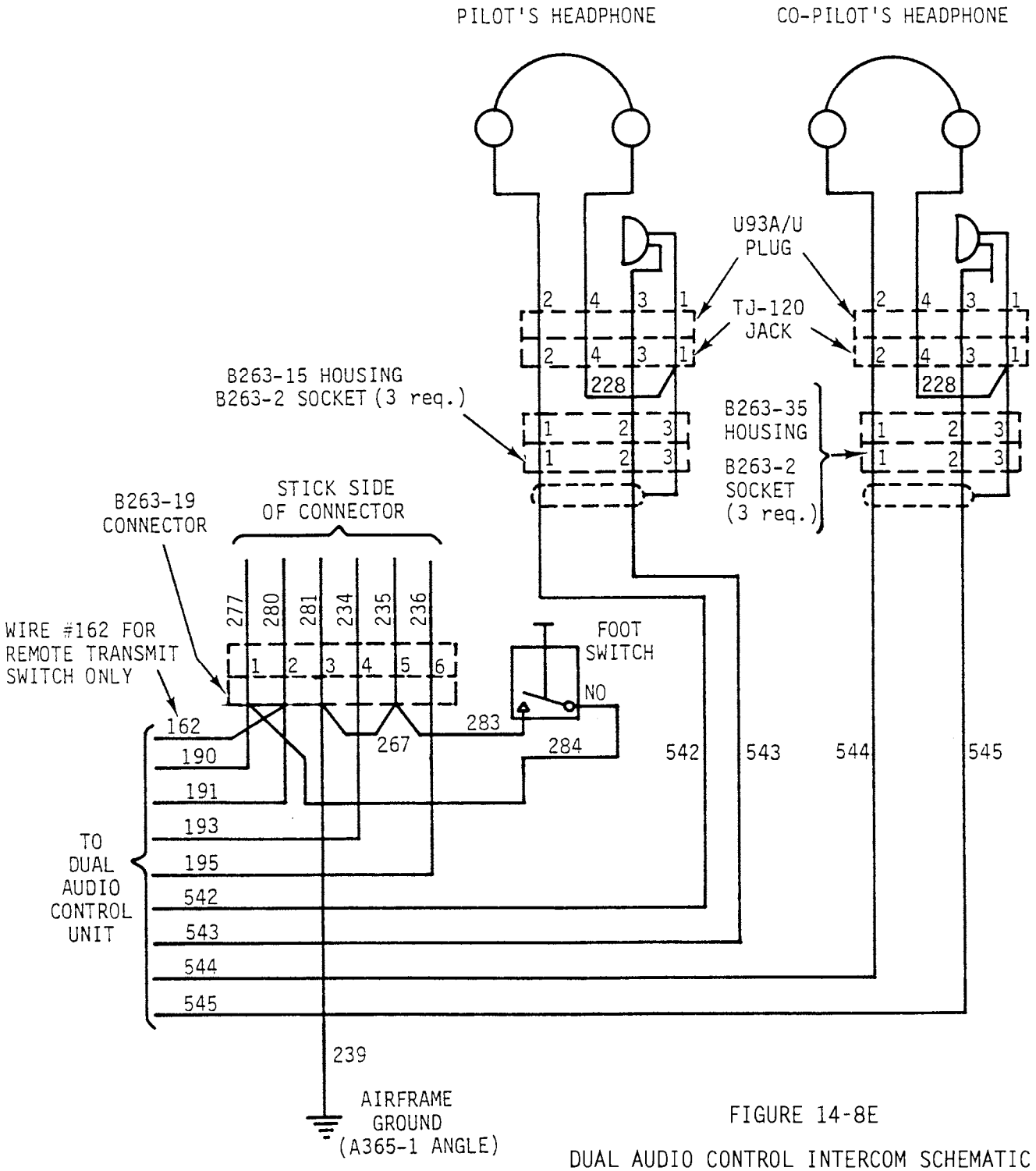

FIGURE 14-8E

DUAL AUDIO CONTROL INTERCOM SCHEMATIC
(For R22s with AIR COMM ACS 300*
Dual Audio Control)

*RHC part no. A692-3.

14.800 AVIONICS SCHEMATICS (cont'd)

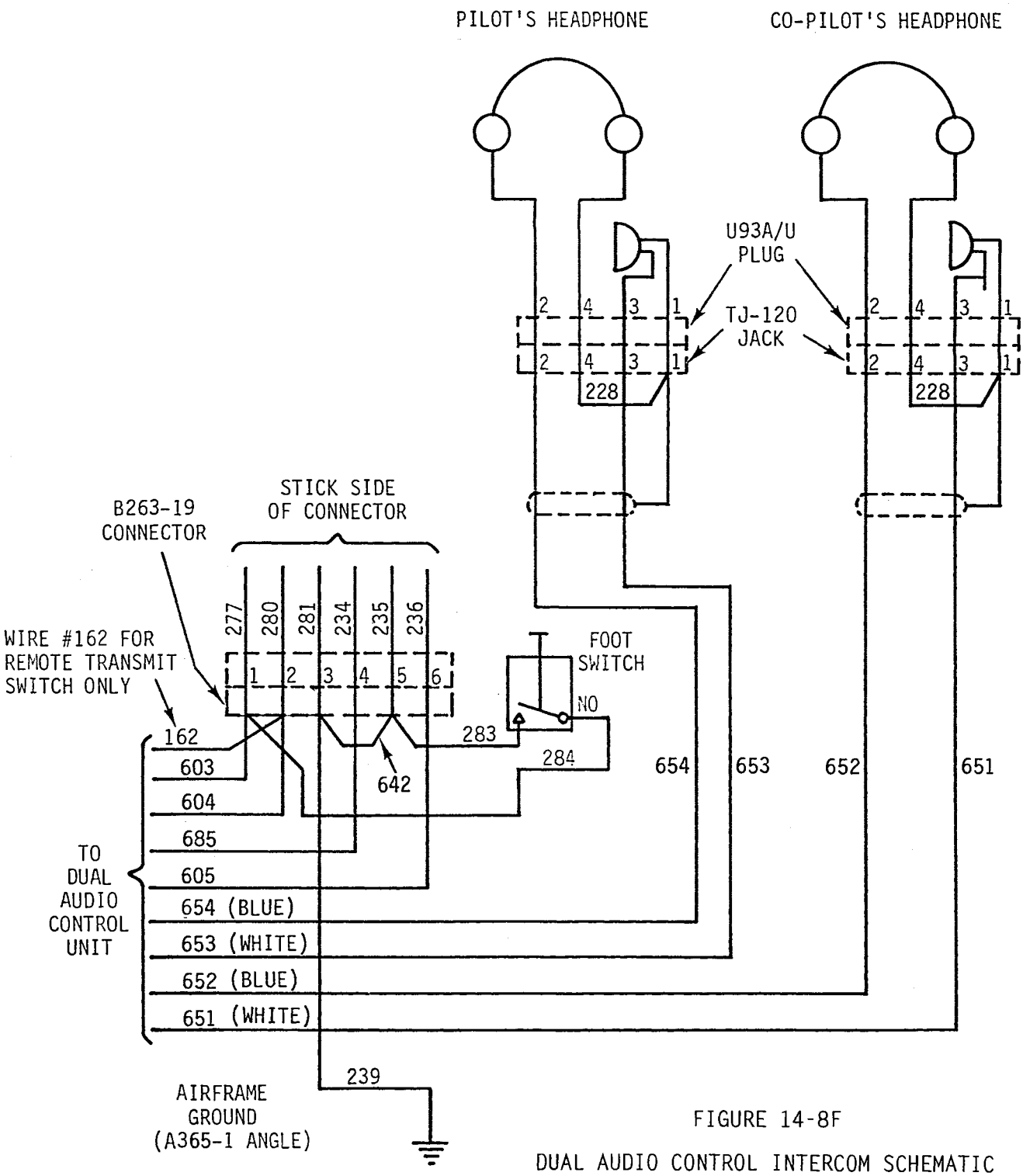

FIGURE 14-8F

DUAL AUDIO CONTROL INTERCOM SCHEMATIC (For R22s with AIR COMM ACS 300* Dual Audio Control with NAT AA80-020** ICS Control; Ship S/N 2967 and on.)

*RHC part no. A692-3.
**RHC part no. B338-1.

14.800 AVIONICS SCHEMATICS (cont'd)

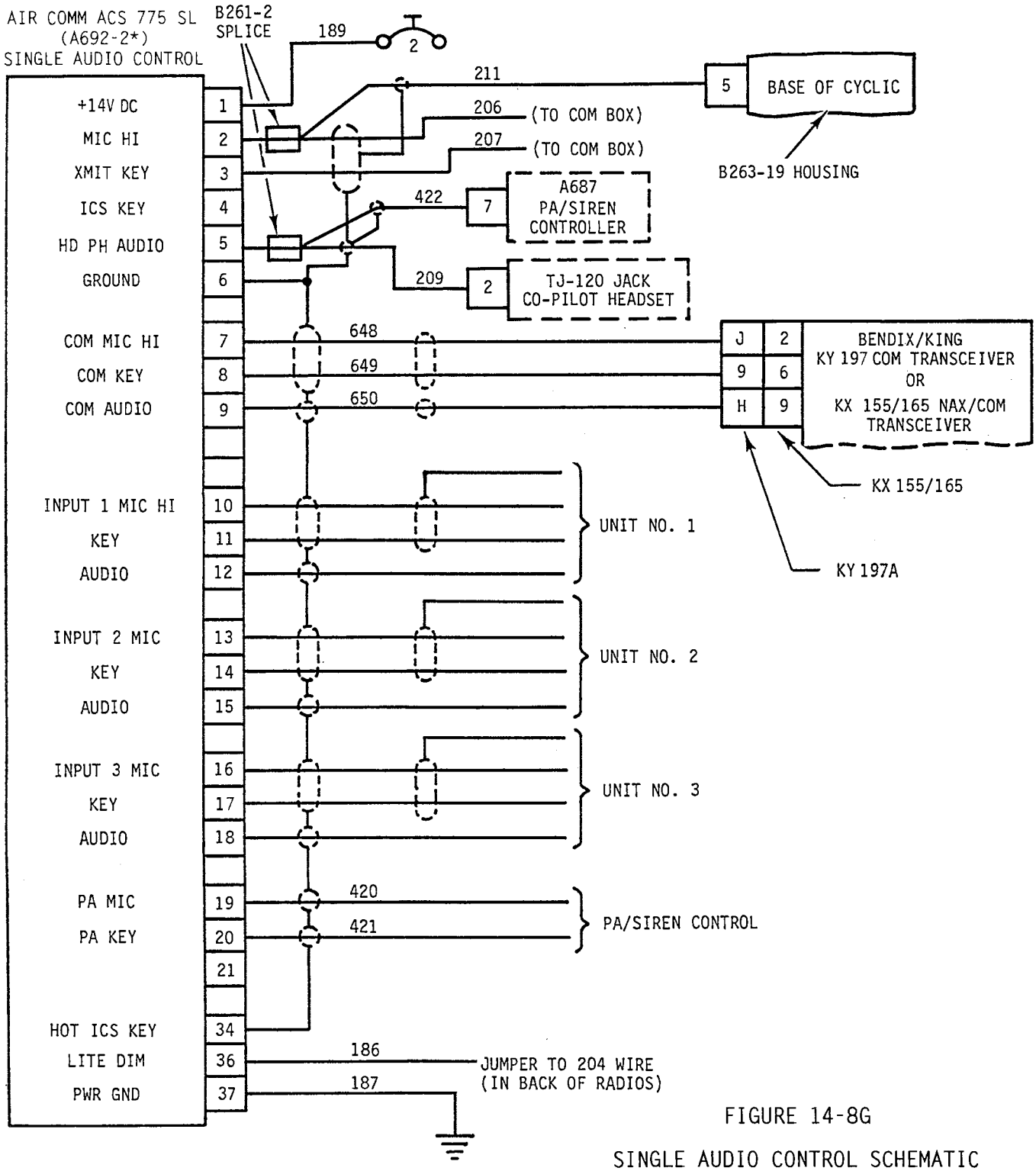

FIGURE 14-8G

SINGLE AUDIO CONTROL SCHEMATIC
AIR COMM ACS 775 SL (A692-2*)
(Ship S/N 2967 and on)

*RHC part no.

14.800 AVIONICS SCHEMATICS (cont'd)

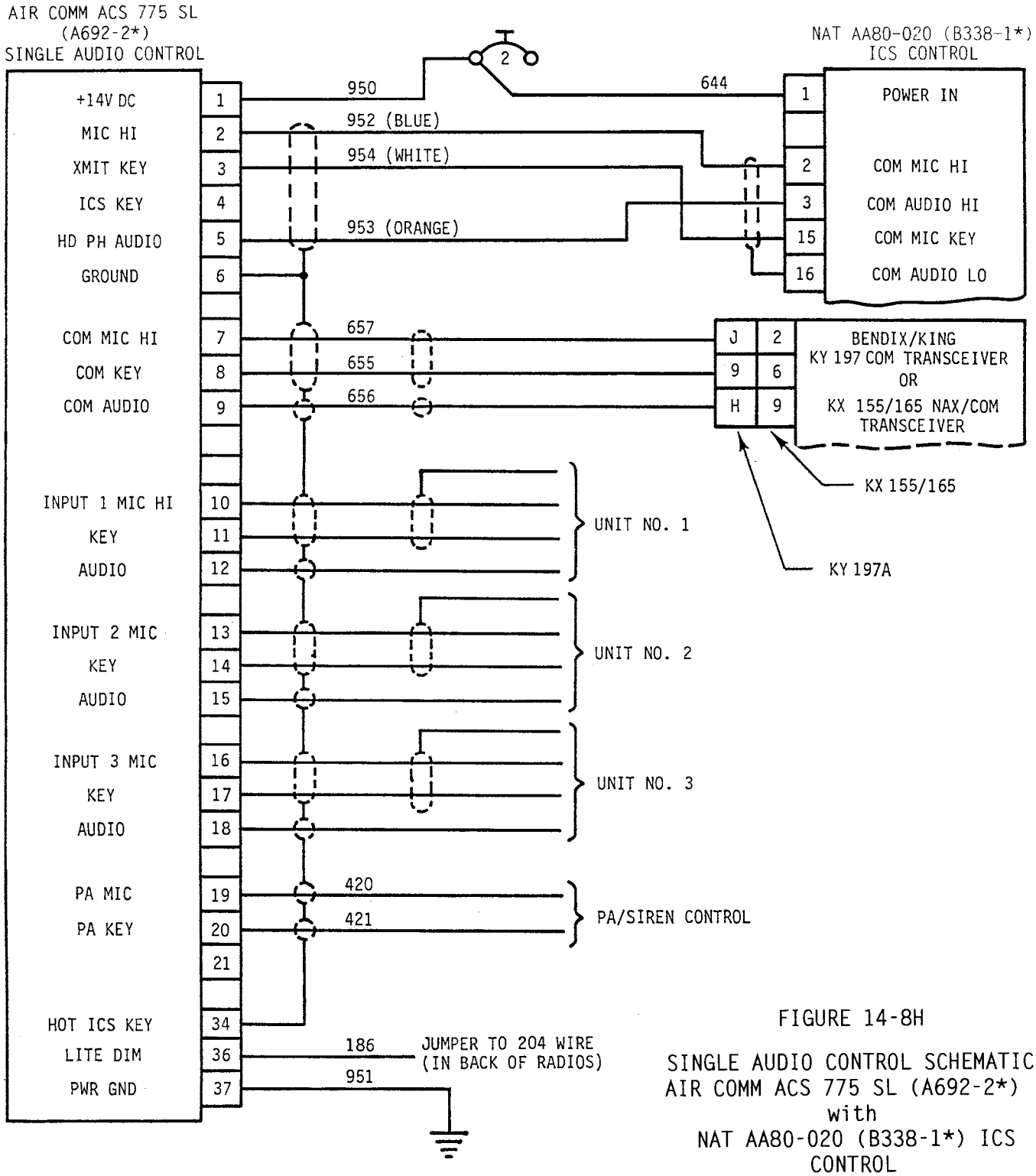

FIGURE 14-8H

SINGLE AUDIO CONTROL SCHEMATIC
AIR COMM ACS 775 SL (A692-2*)
with
NAT AA80-020 (B338-1*) ICS
CONTROL
(Ship S/N 2967 and on)

*RHC part no.

14.800 AVIONICS SCHEMATICS (cont'd)

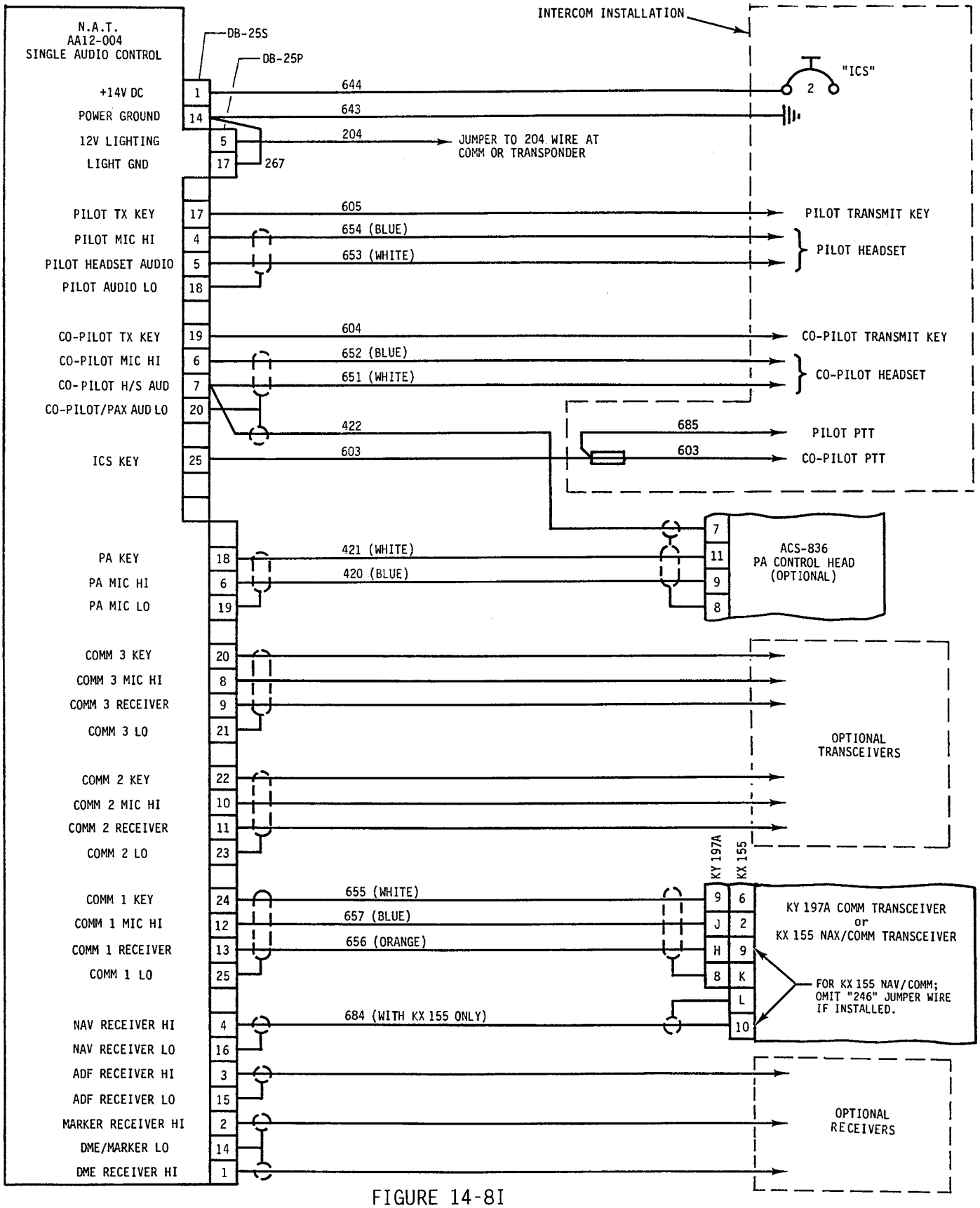

FIGURE 14-8I

NAT AA12-004 SINGLE AUDIO CONTROL SCHEMATIC
(Ship S/N 2967 and on)

14.800 AVIONICS SCHEMATICS (cont'd)

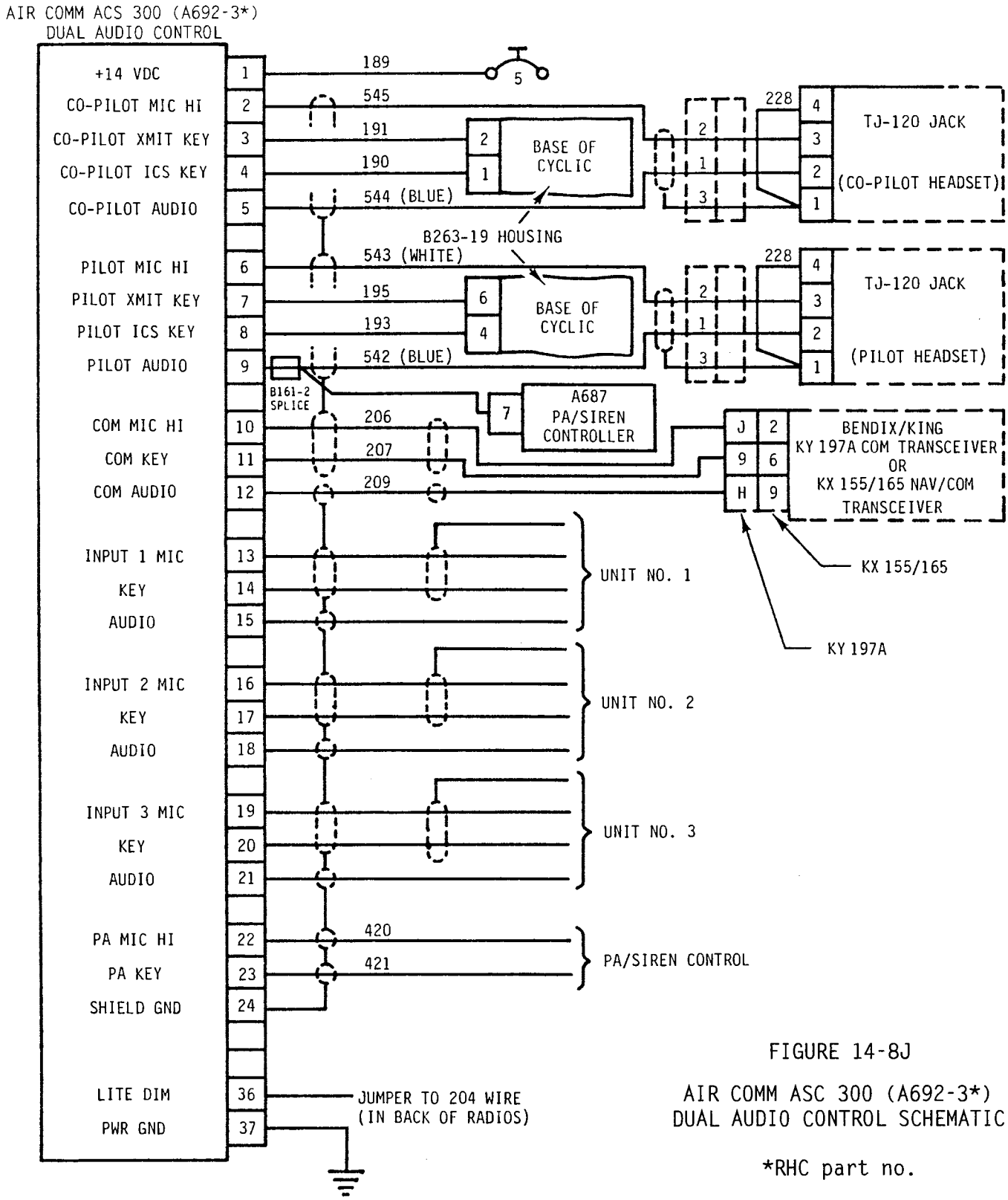

FIGURE 14-8J

AIR COMM ASC 300 (A692-3*)
DUAL AUDIO CONTROL SCHEMATIC

*RHC part no.

14.800 AVIONICS SCHEMATICS (cont'd)

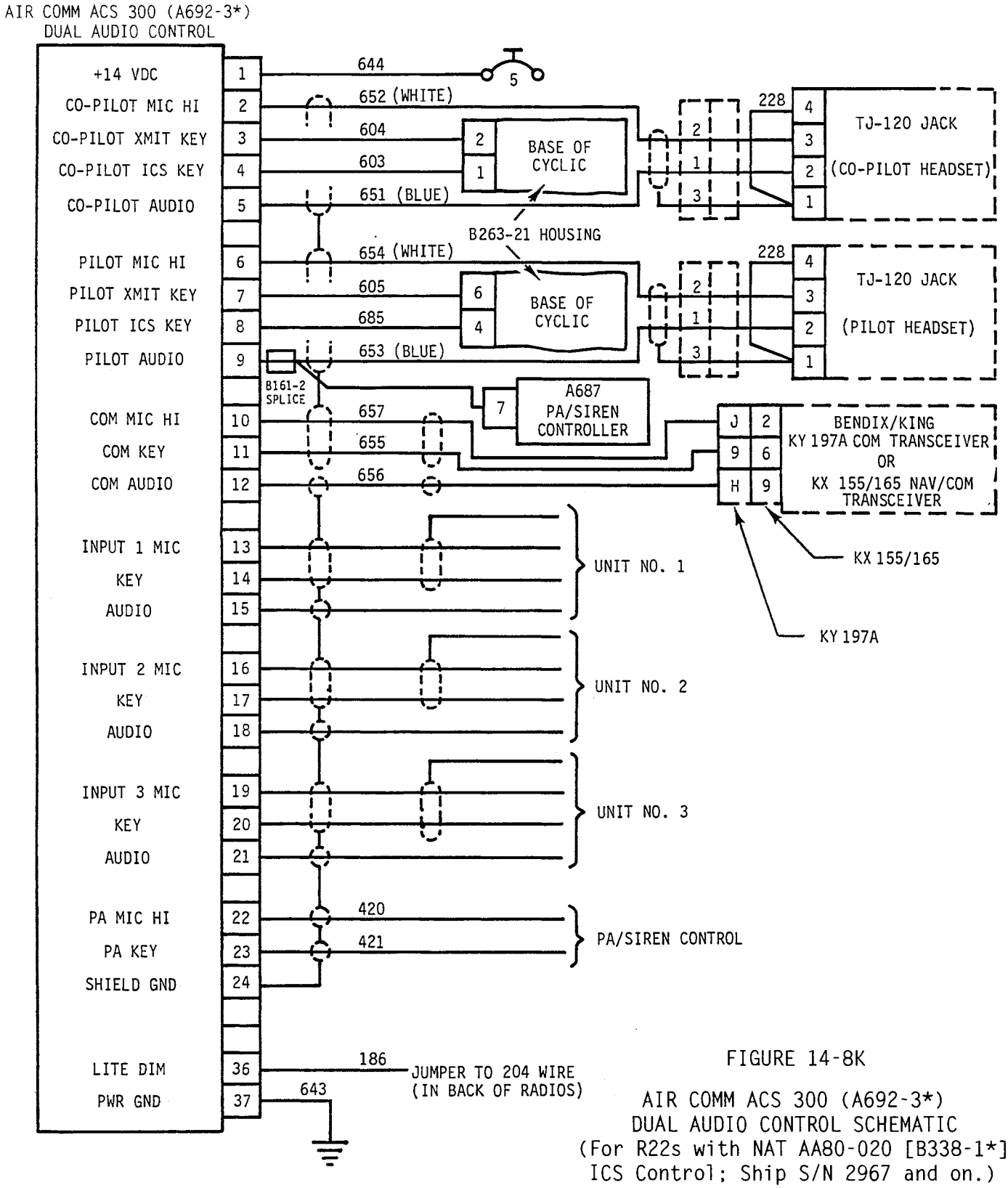

FIGURE 14-8K

AIR COMM ACS 300 (A692-3*)
DUAL AUDIO CONTROL SCHEMATIC
(For R22s with NAT AA80-020 [B338-1*]
ICS Control; Ship S/N 2967 and on.)

*RHC part no.

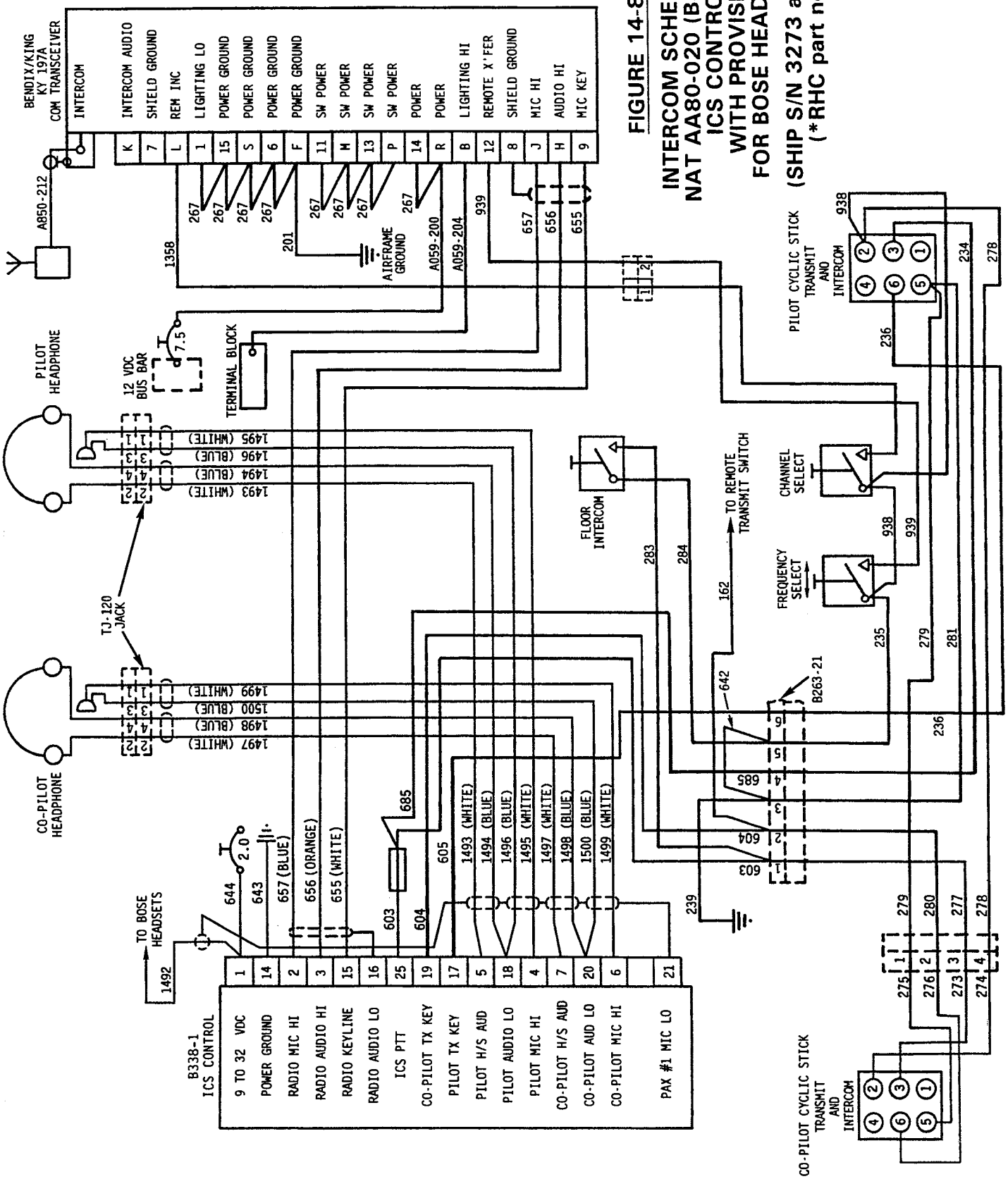

FIGURE 14-8L
INTERCOM SCHEMATIC
NAT AA80-020 (B338-1*)
ICS CONTROL
WITH PROVISION
FOR BOSE HEADSETS
(SHIP S/N 3273 and on)
(*RHC part no.)

INTENTIONALLY BLANK

14.800 (cont'd)

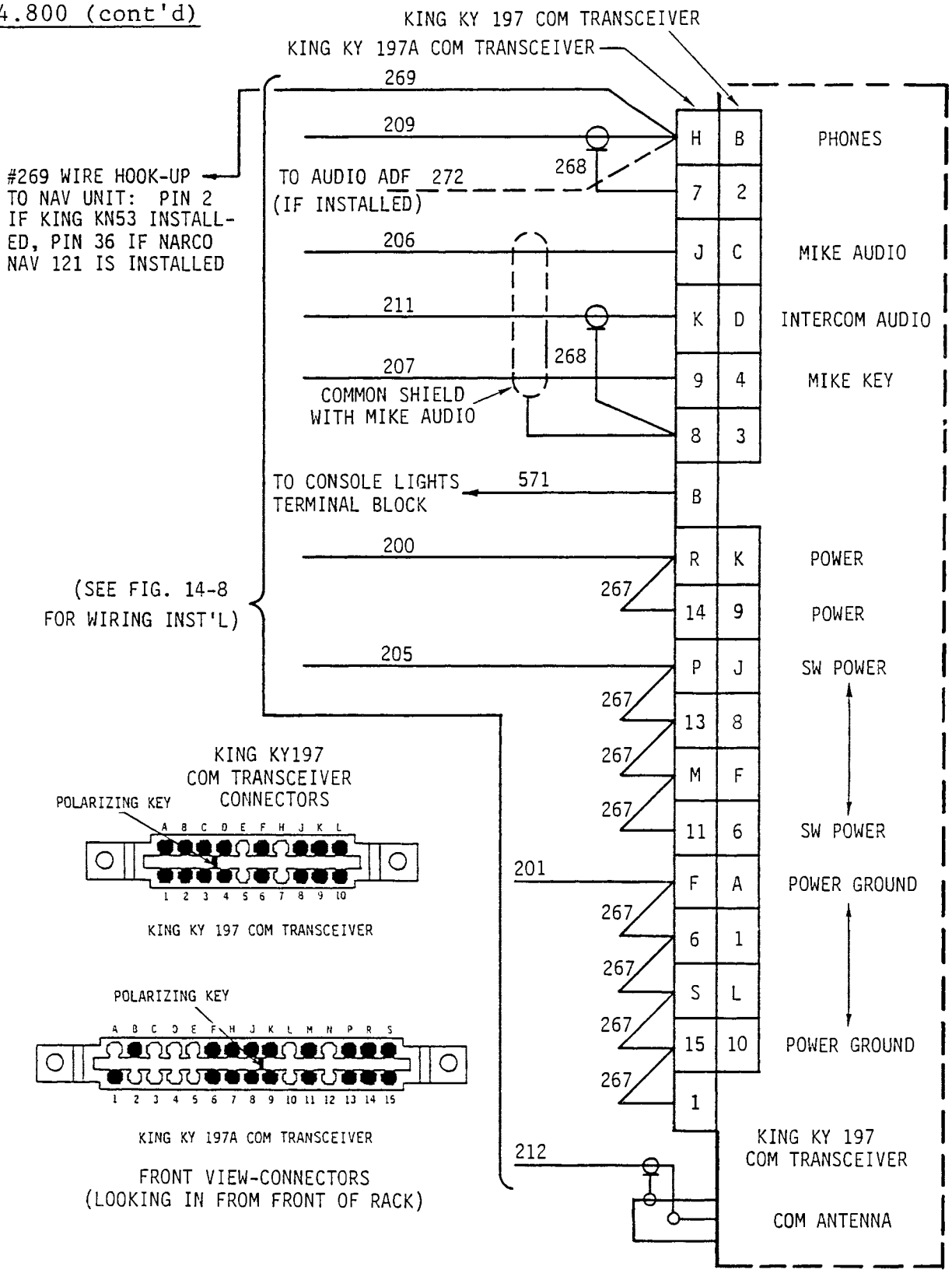

FIGURE 14-9 KING KY197/197A COM TRANSCEIVER

14.800 (cont'd)

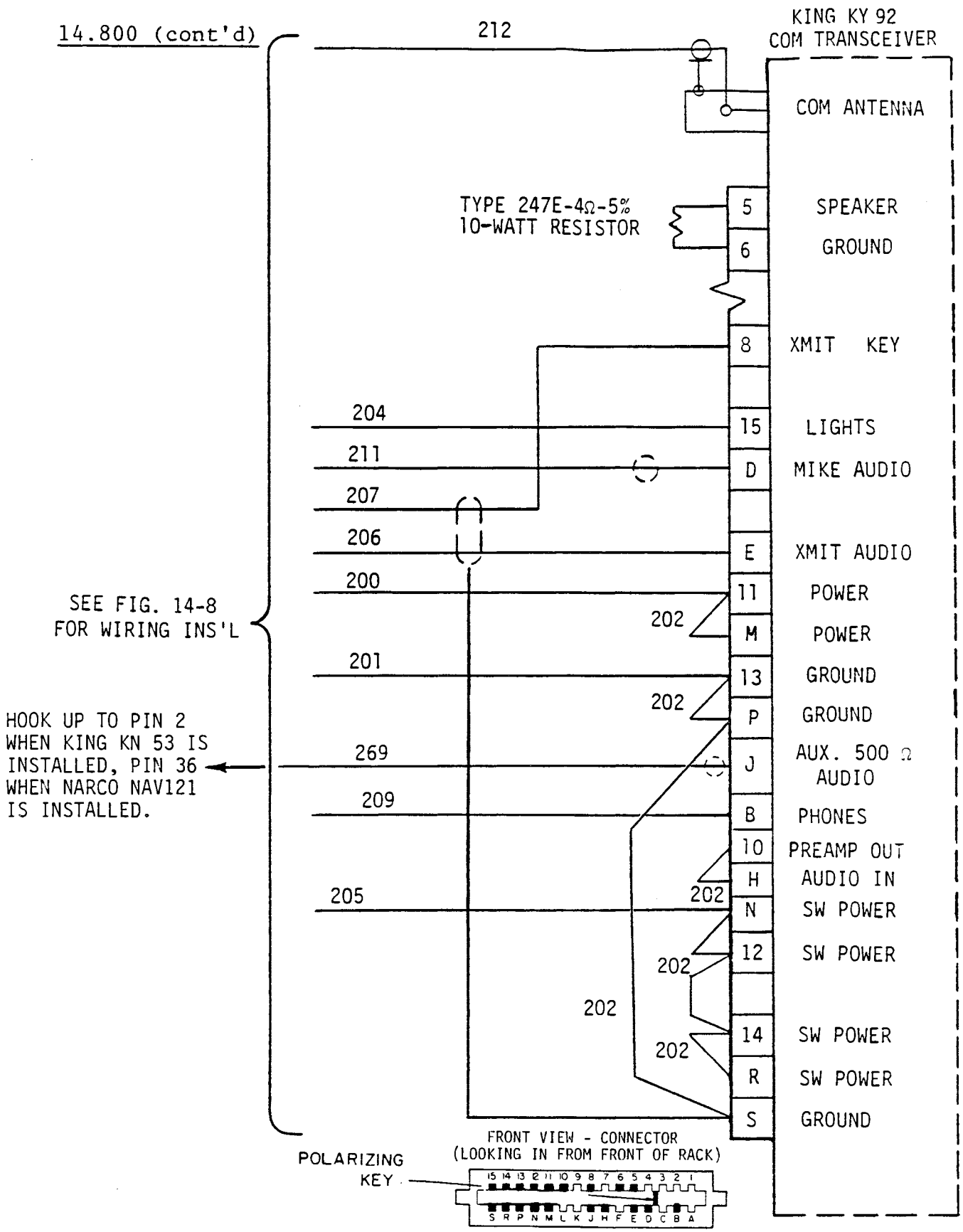

FIGURE 14-10 KING KY92 COM TRANSCEIVER

14.800 (cont'd)

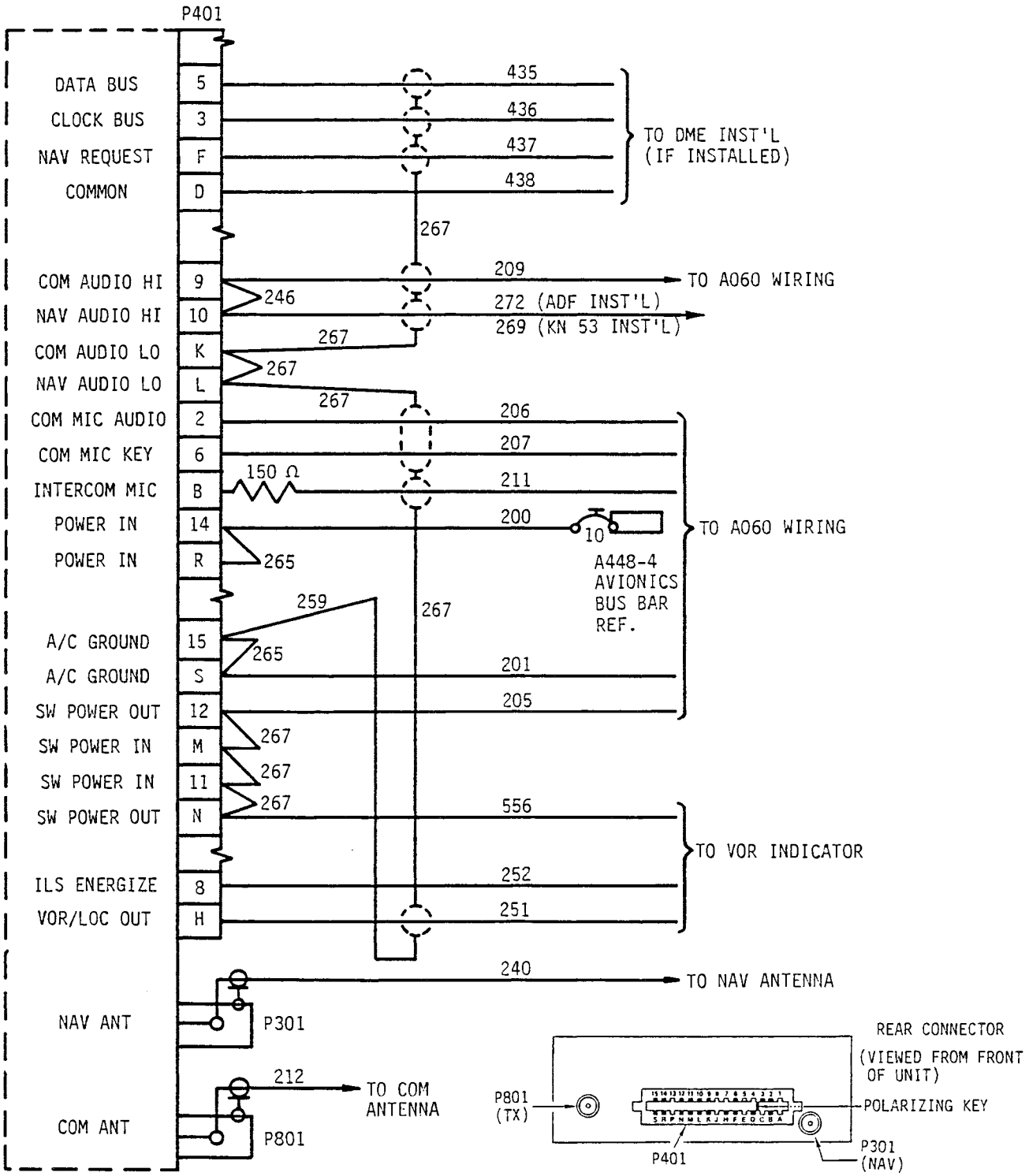

FIGURE 14-10A KING KX155 VHF NAV COM TRANSCEIVER

This page intentionally left blank.

14.800 (cont'd)

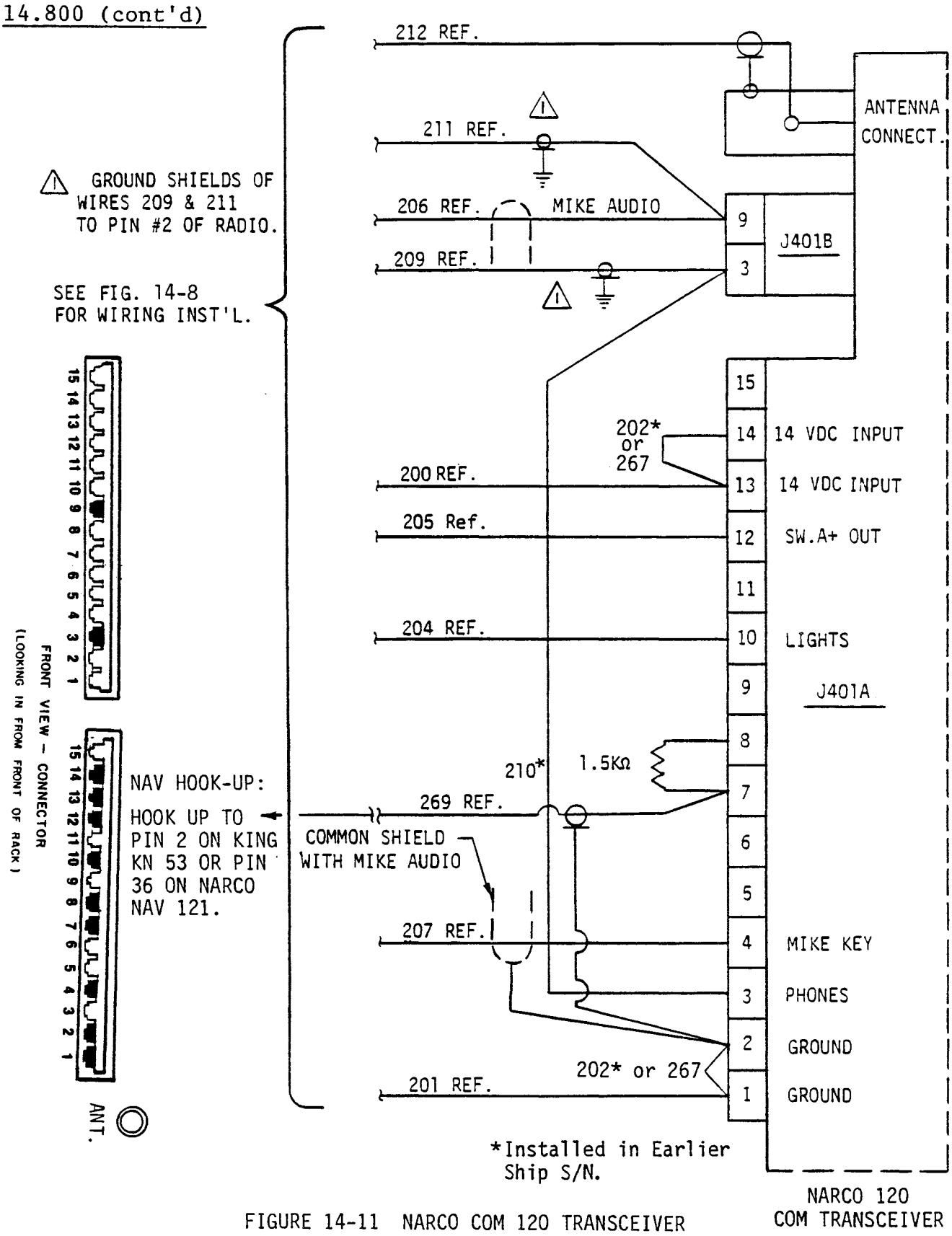

FIGURE 14-11 NARCO COM 120 TRANSCEIVER

14.800 (cont'd)

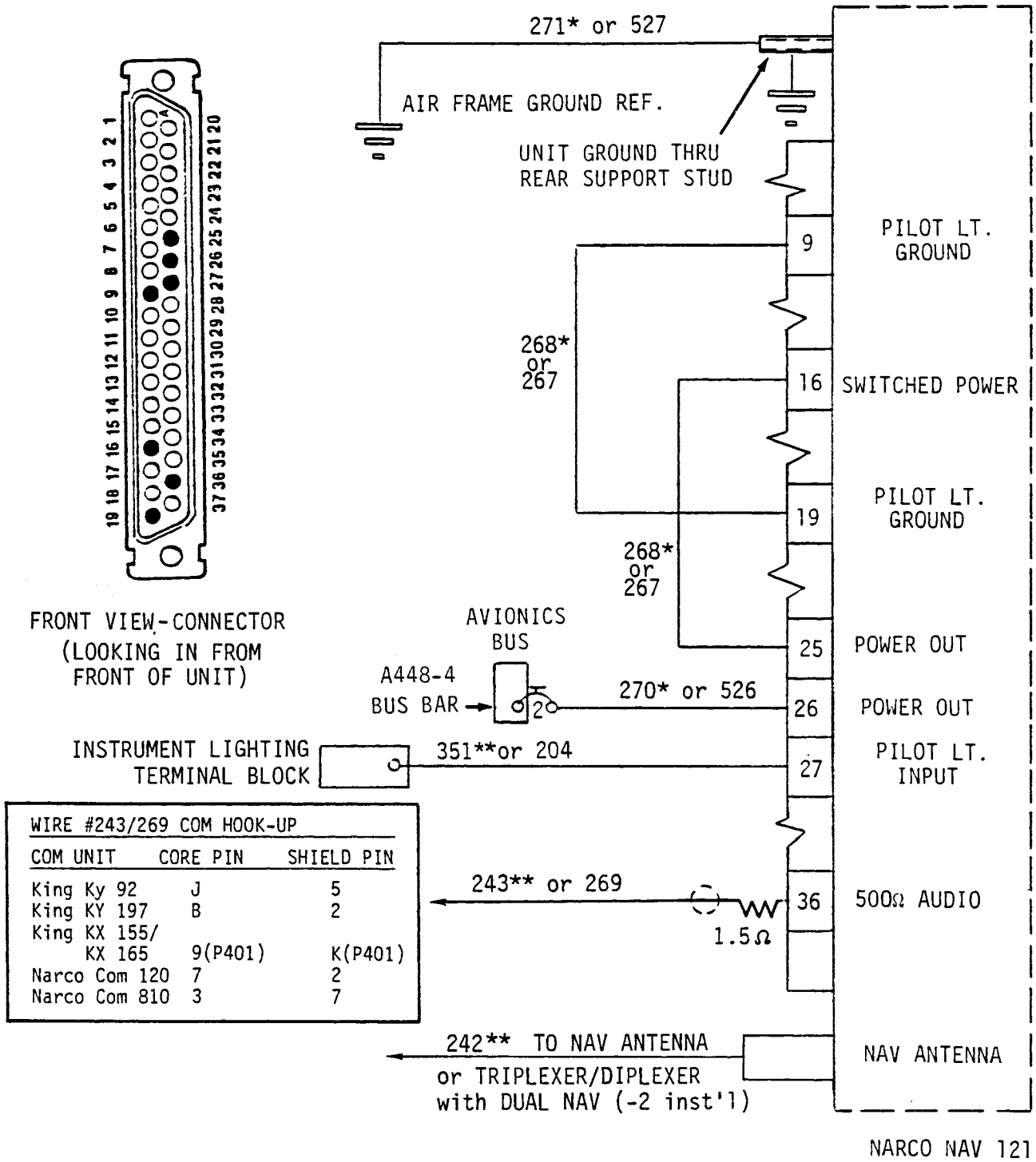

WIRE #243/269 COM HOOK-UP

COM UNIT	CORE PIN	SHIELD PIN
King Ky 92	J	5
King KY 197	B	2
King KX 155/ KX 165	9(P401)	K(P401)
Narco Com 120	7	2
Narco Com 810	3	7

*Installed in earlier Ship S/N's.
**10-Hole Upper Console

FIGURE 14-12 NARCO NAV 121

14.800 (cont'd)

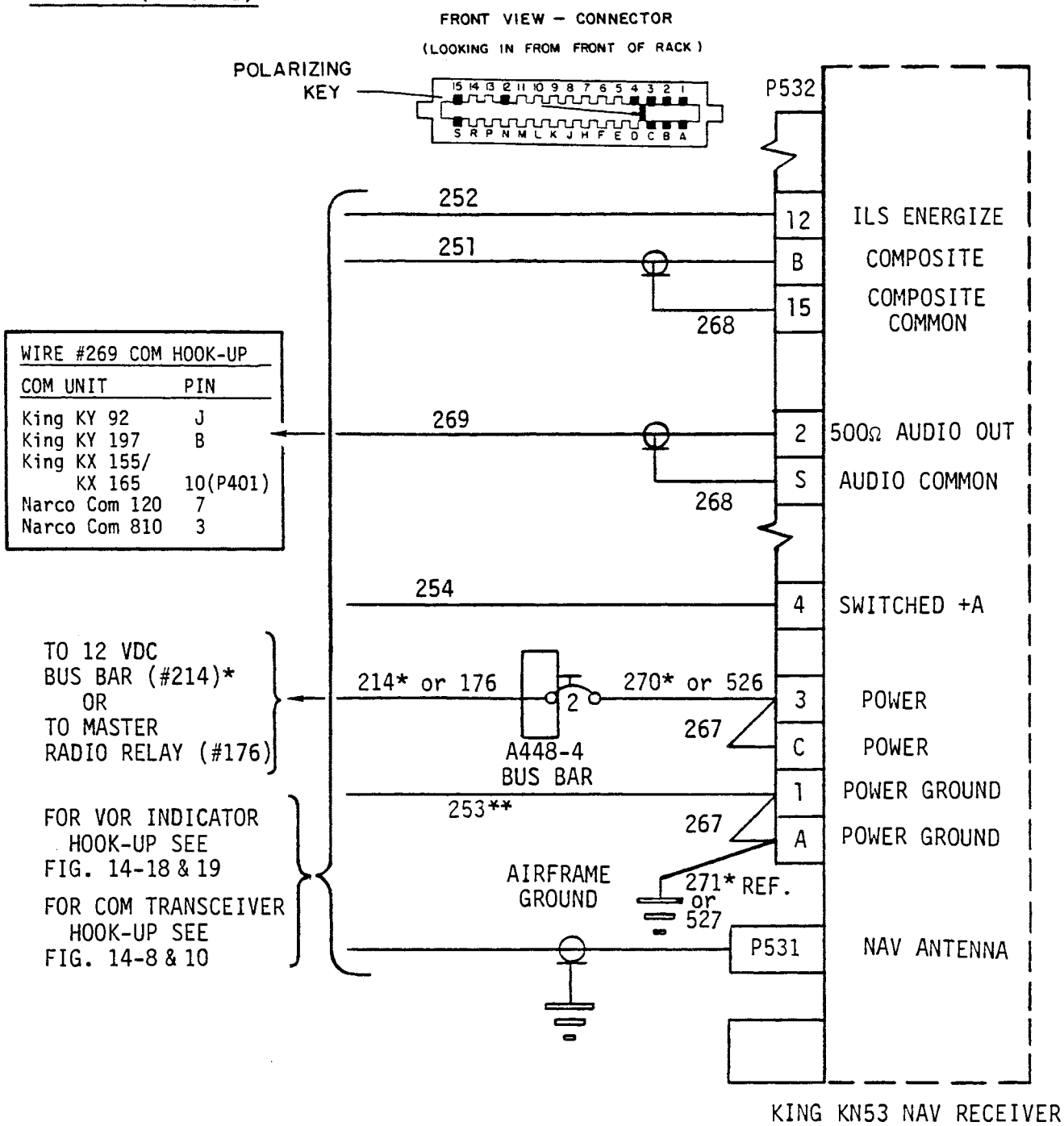

*Installed in Earlier Ship S/Ns.
See Page 14.14-15

**Wire #253 excluded after 3-86.

FIGURE 14-13 KING KN53 NAV RECEIVER

14.800 (cont'd)

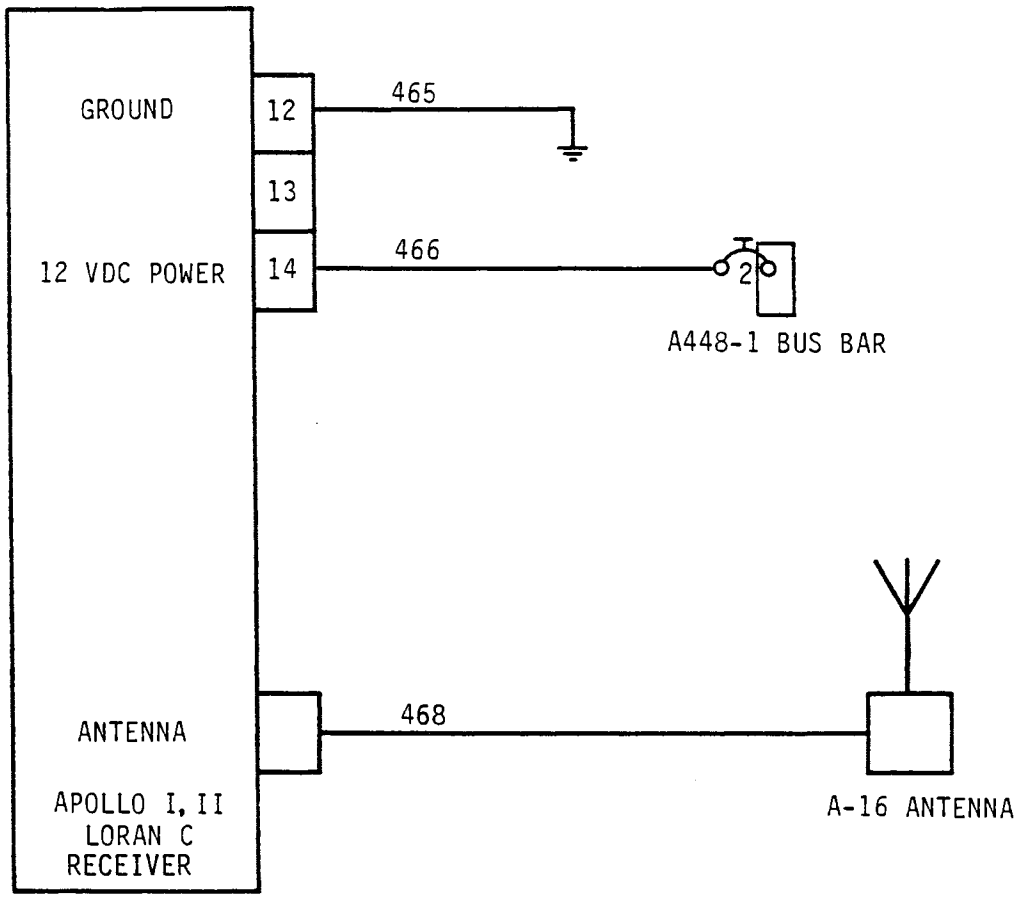

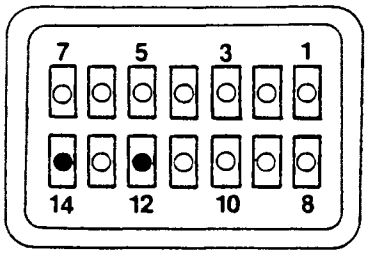

FRONT VIEW CONNECTOR

(LOOKING FROM REAR OF UNIT)

FIGURE 14-14 APOLLO I, II LORAN C RECEIVER

14.800 (cont'd)

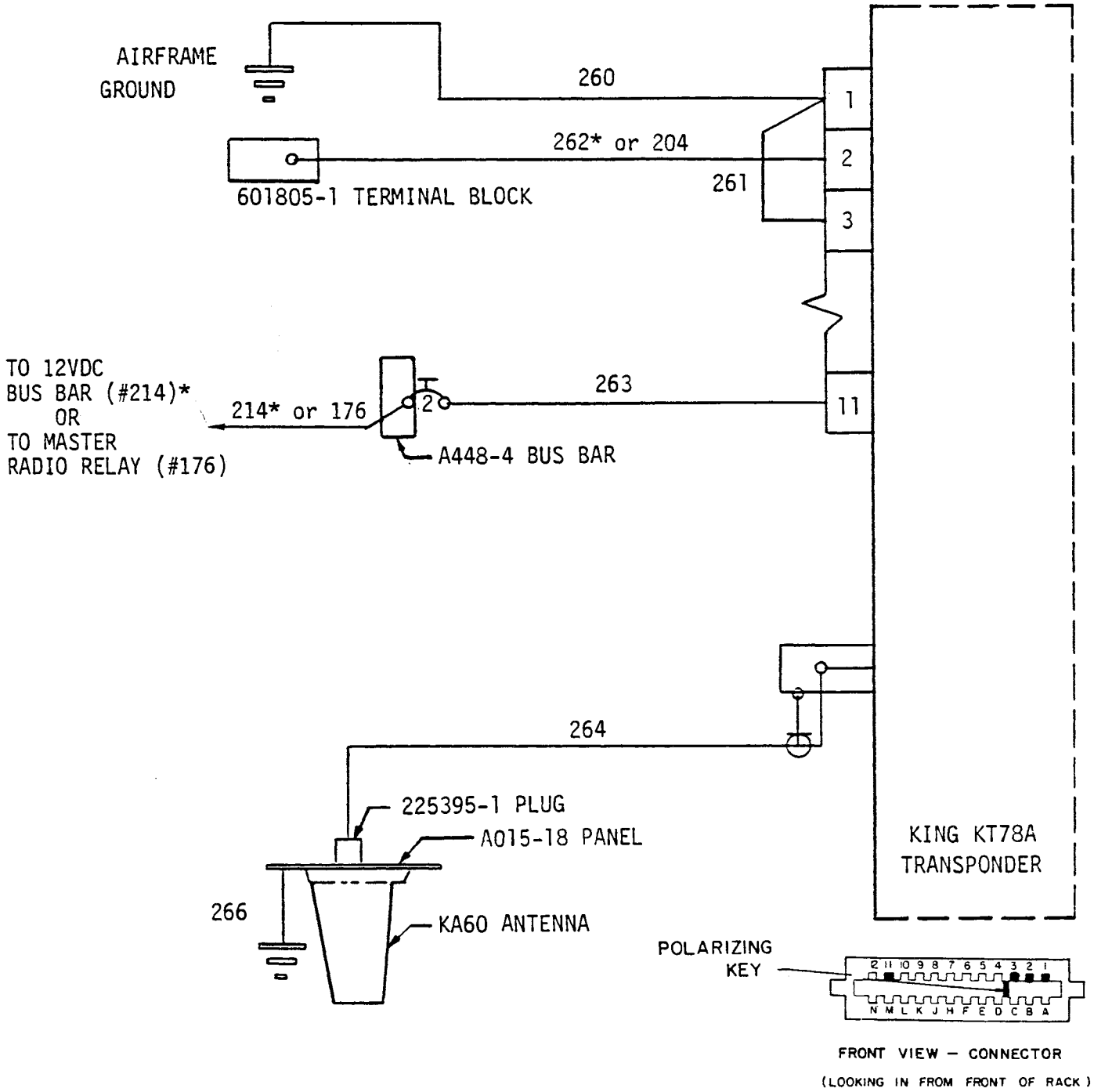

*Installed in Earlier Ship S/N's
See Page 14.14-15

FIGURE 14-15 KING KT76A/78A TRANSPONDER

14.800 (cont'd)

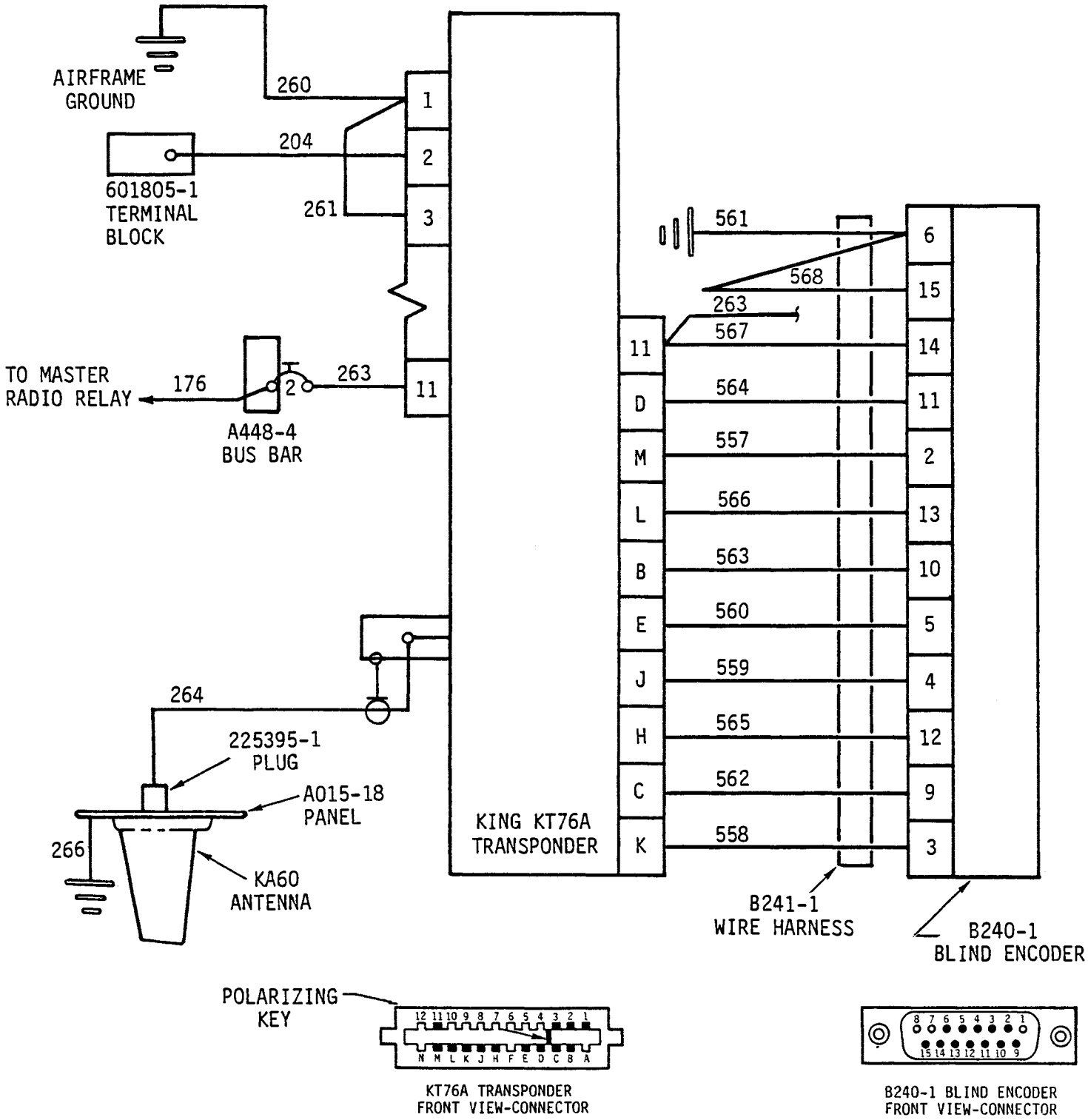

FIGURE 14-16 D120-P2-T BLIND ENCODER/DIGITIZER

14.800 (cont'd)

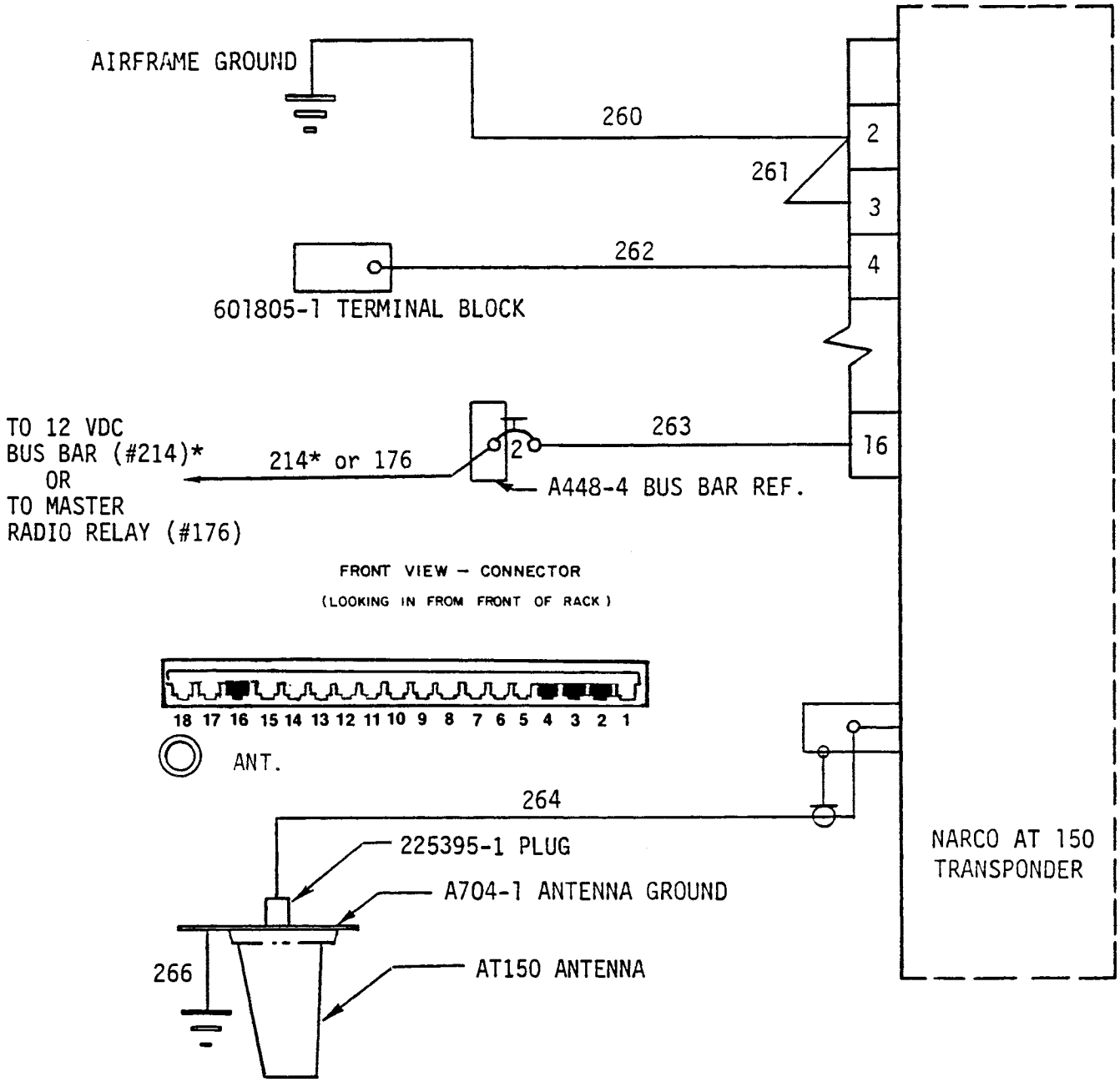

*Installed in Earlier Ship S/Ns. See Page 14.14-15

FIGURE 14-17 NARCO AT 150 TRANSPONDER

14.800 (cont'd)

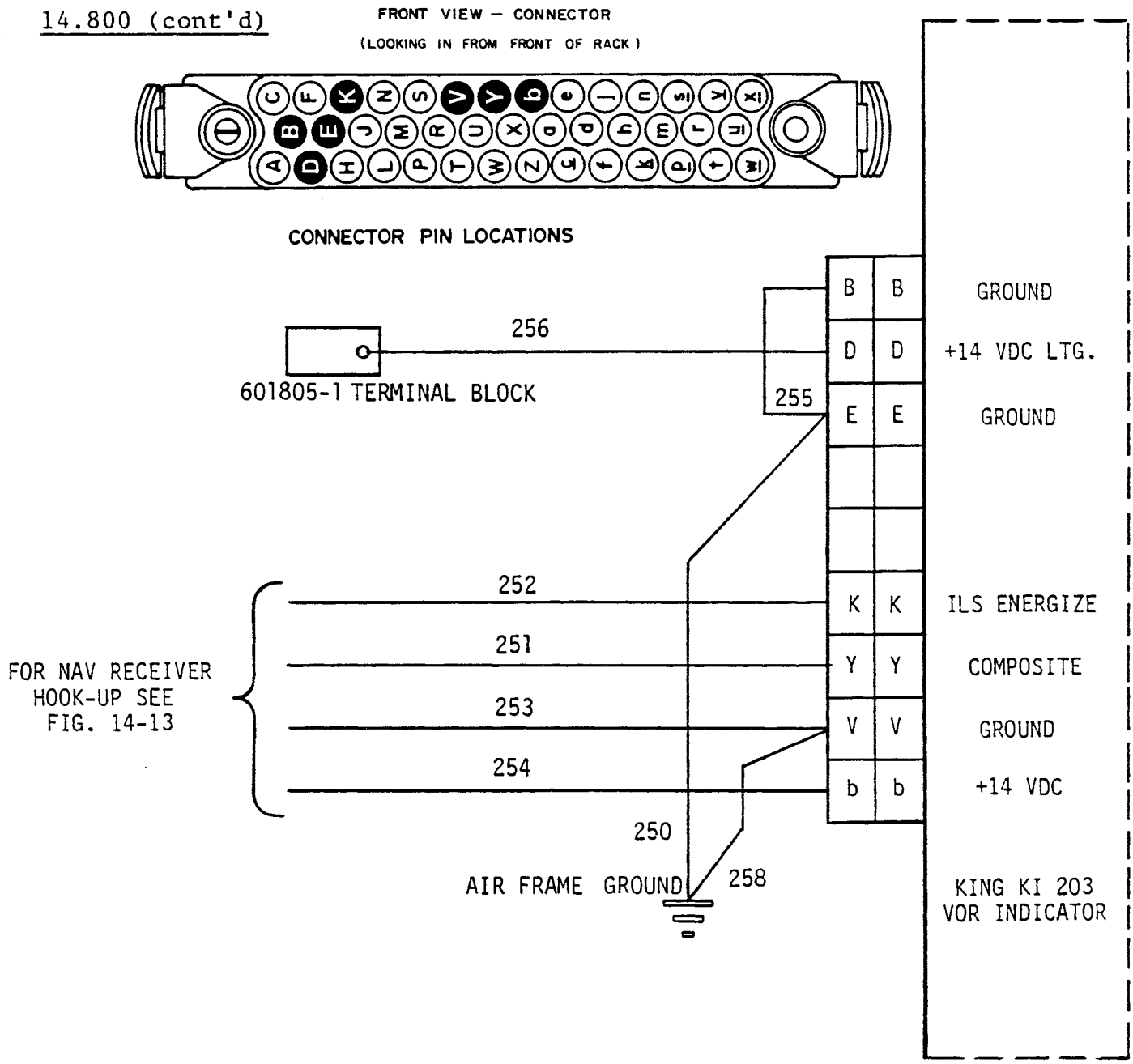

FIGURE 14-18 KING KI 203 VOR INDICATOR
(Installed Prior to 1/87)

14.800 (cont'd)

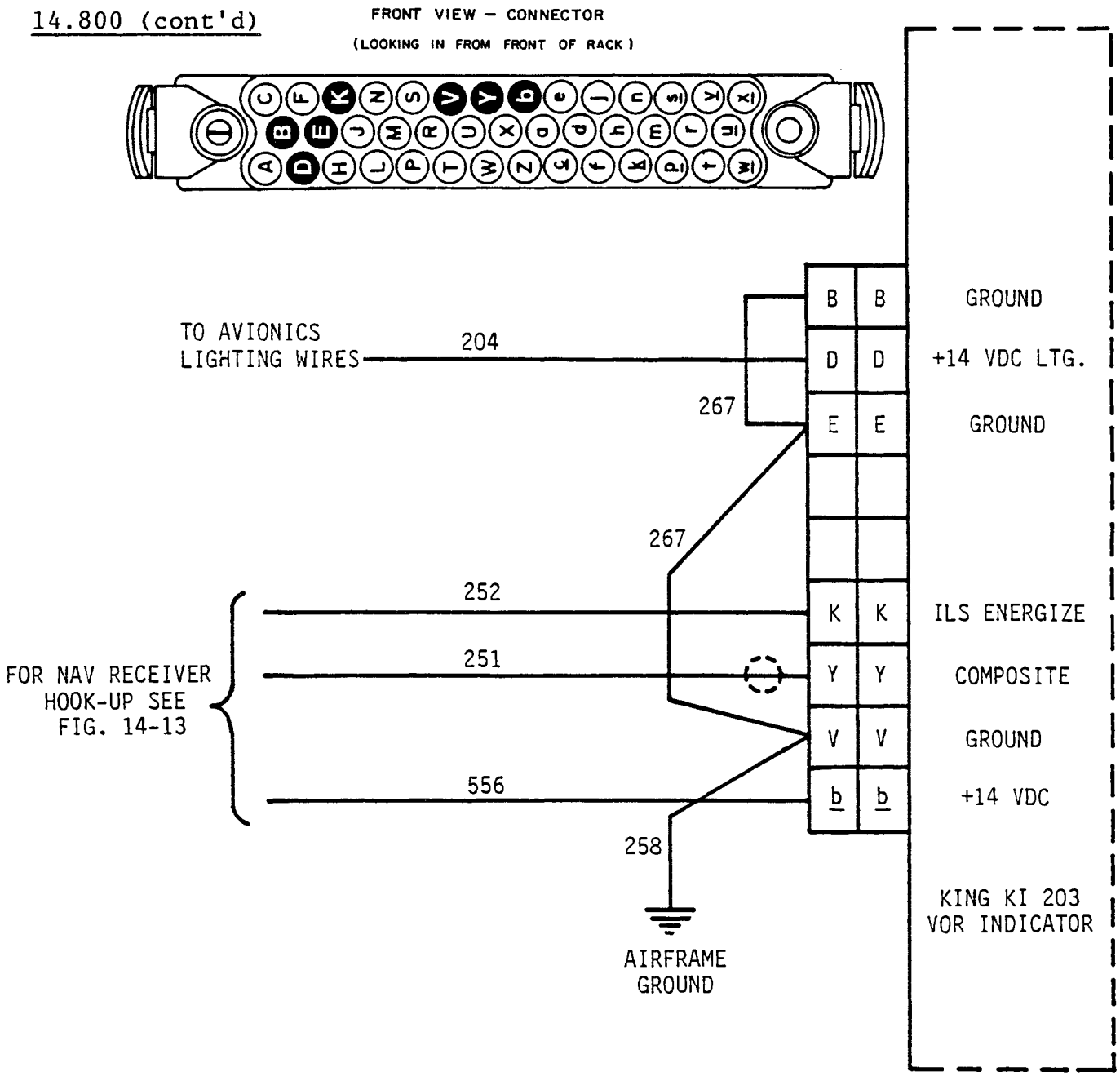

FIGURE 14-19 KING KI203 VOR INDICATOR
(Installed after 1/87)

14.800 (cont'd)

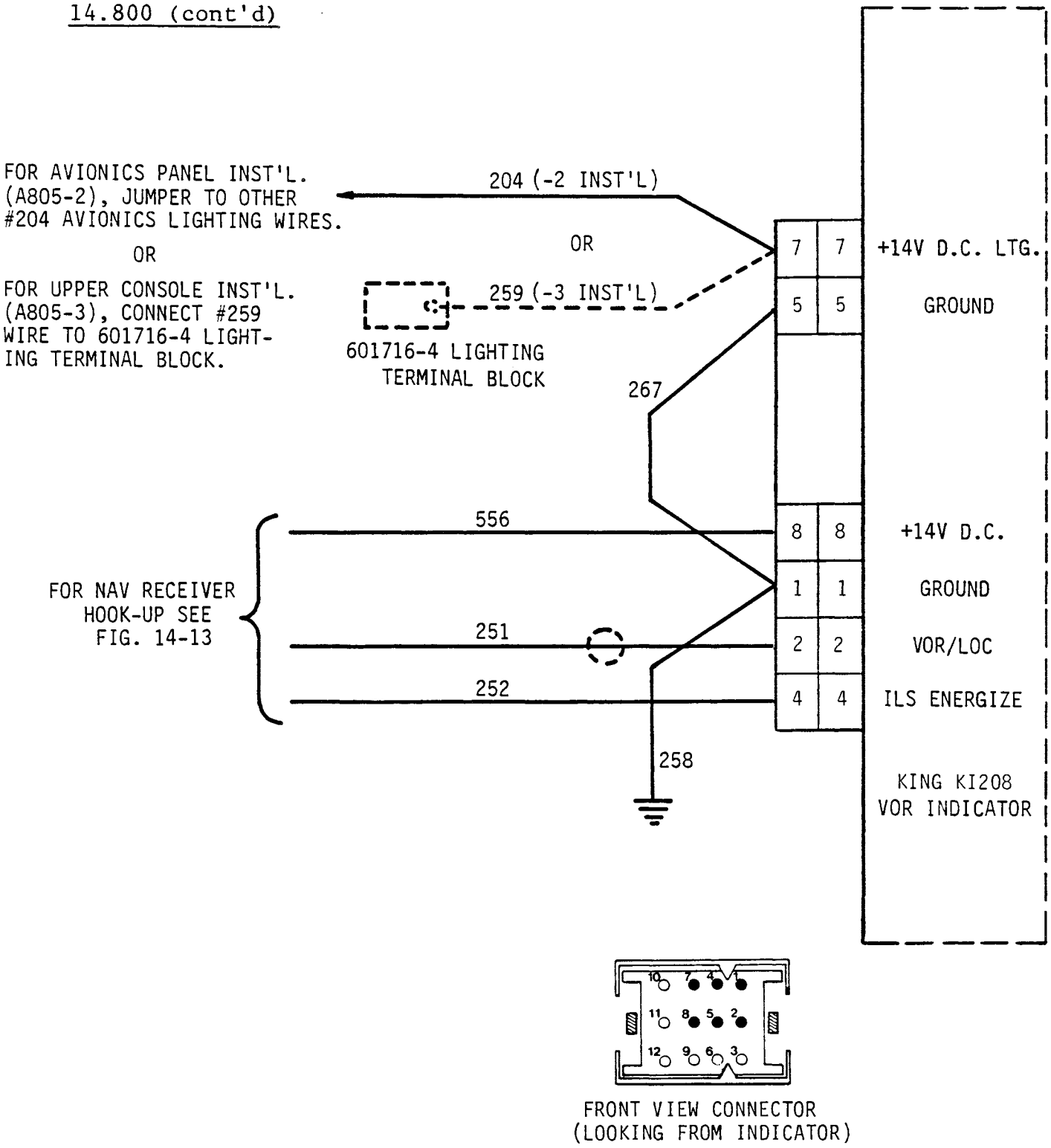

FIGURE 14-20 KING KI 208 VOR INDICATOR

14.800 (cont'd)

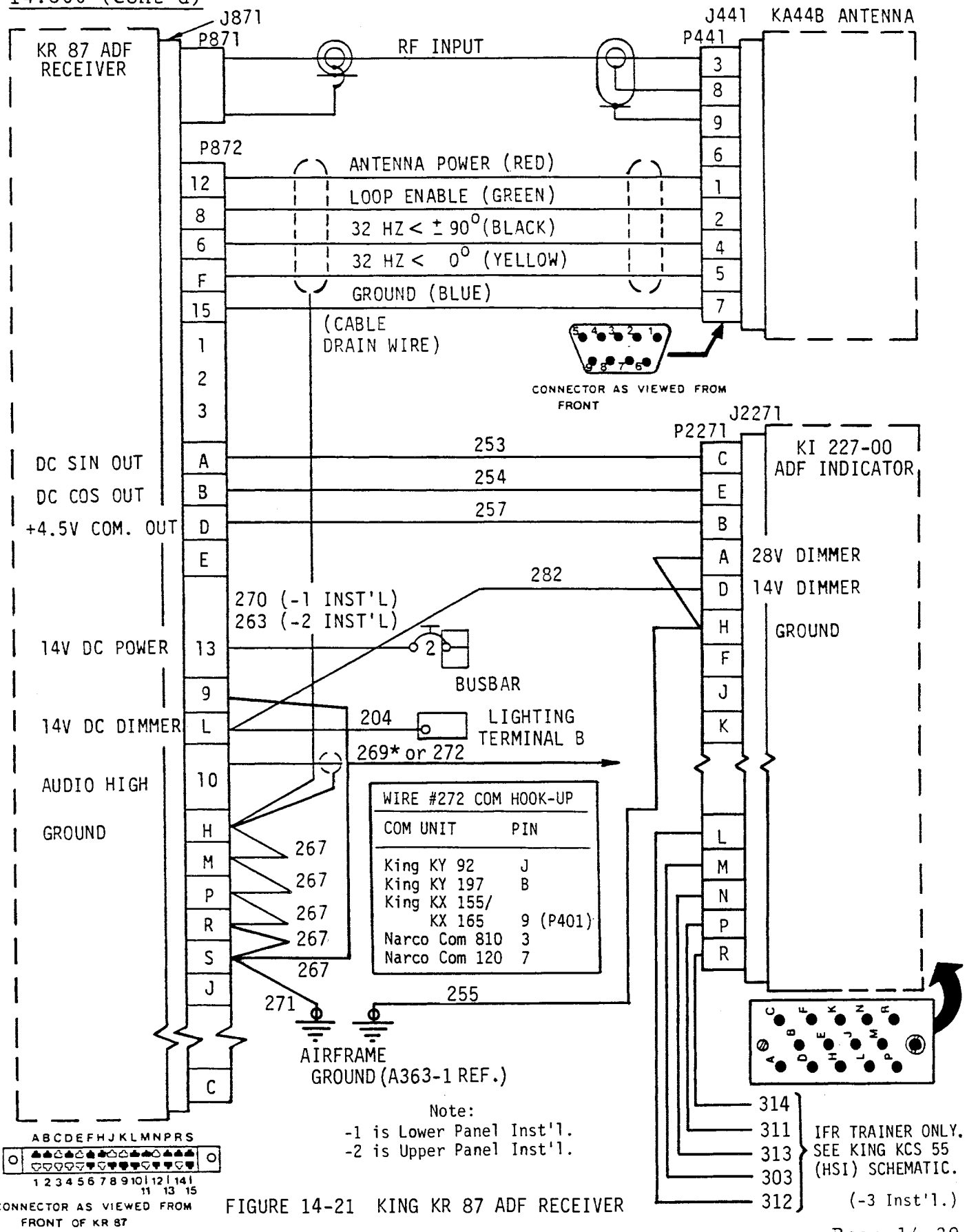

FIGURE 14-21 KING KR 87 ADF RECEIVER

*Installed in Earlier Ship S/N.

14.800 (cont'd)

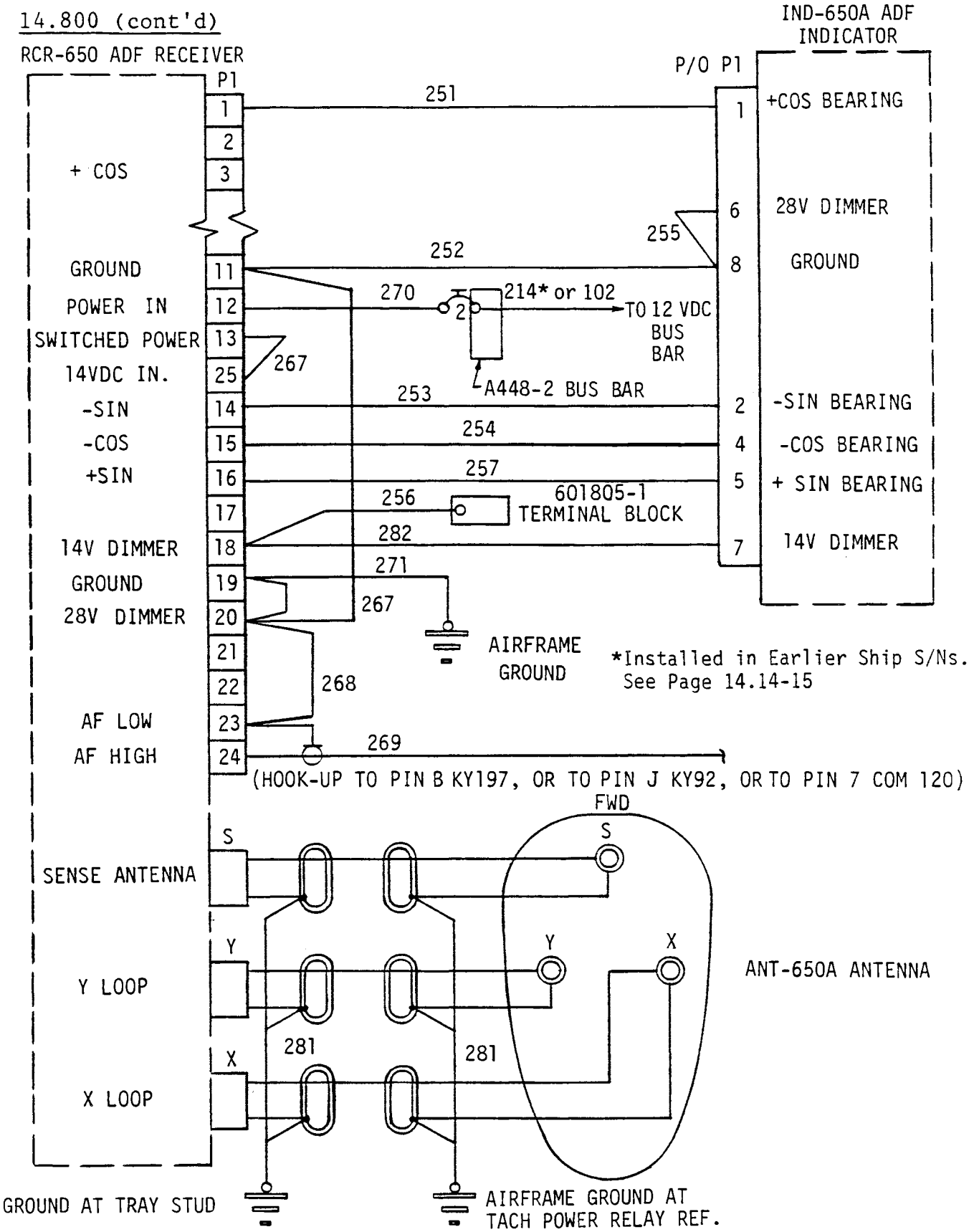

FIGURE 14-22 COLLINS ADF-650A SYSTEM

14.800 AVIONICS SCHEMATICS (cont'd)

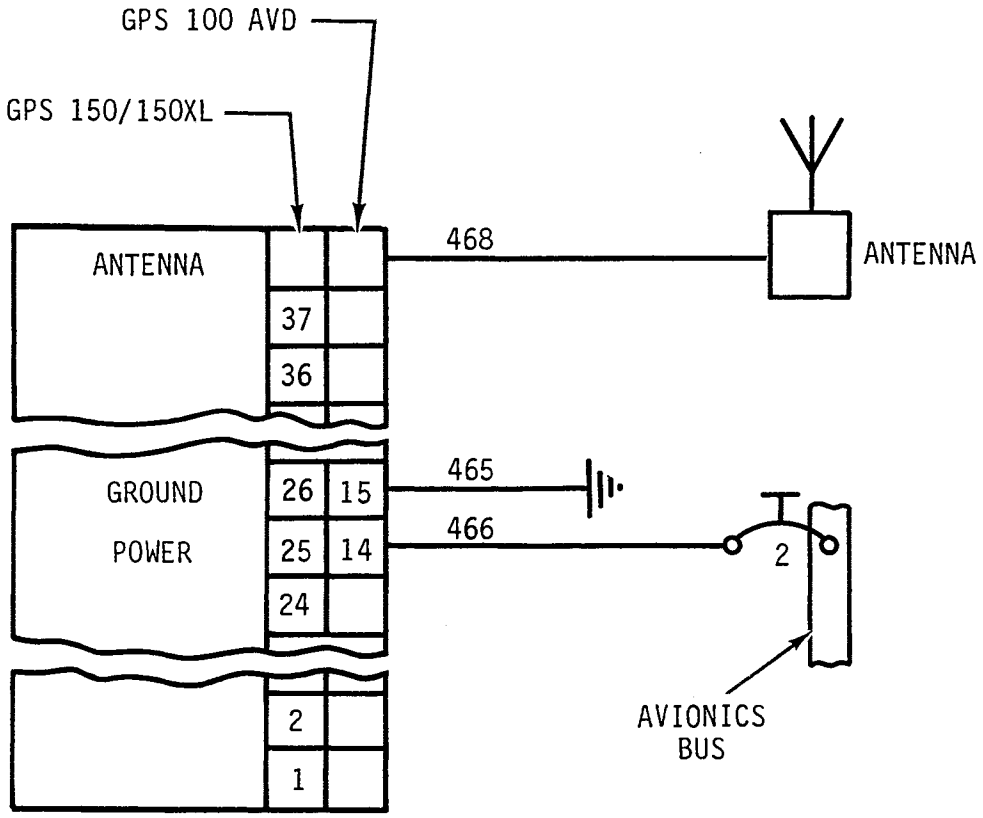

FIGURE 14-22A

GARMIN GPS 100, 150, and 150XL
SCHEMATIC

14.800 AVIONICS SCHEMATICS (cont'd)

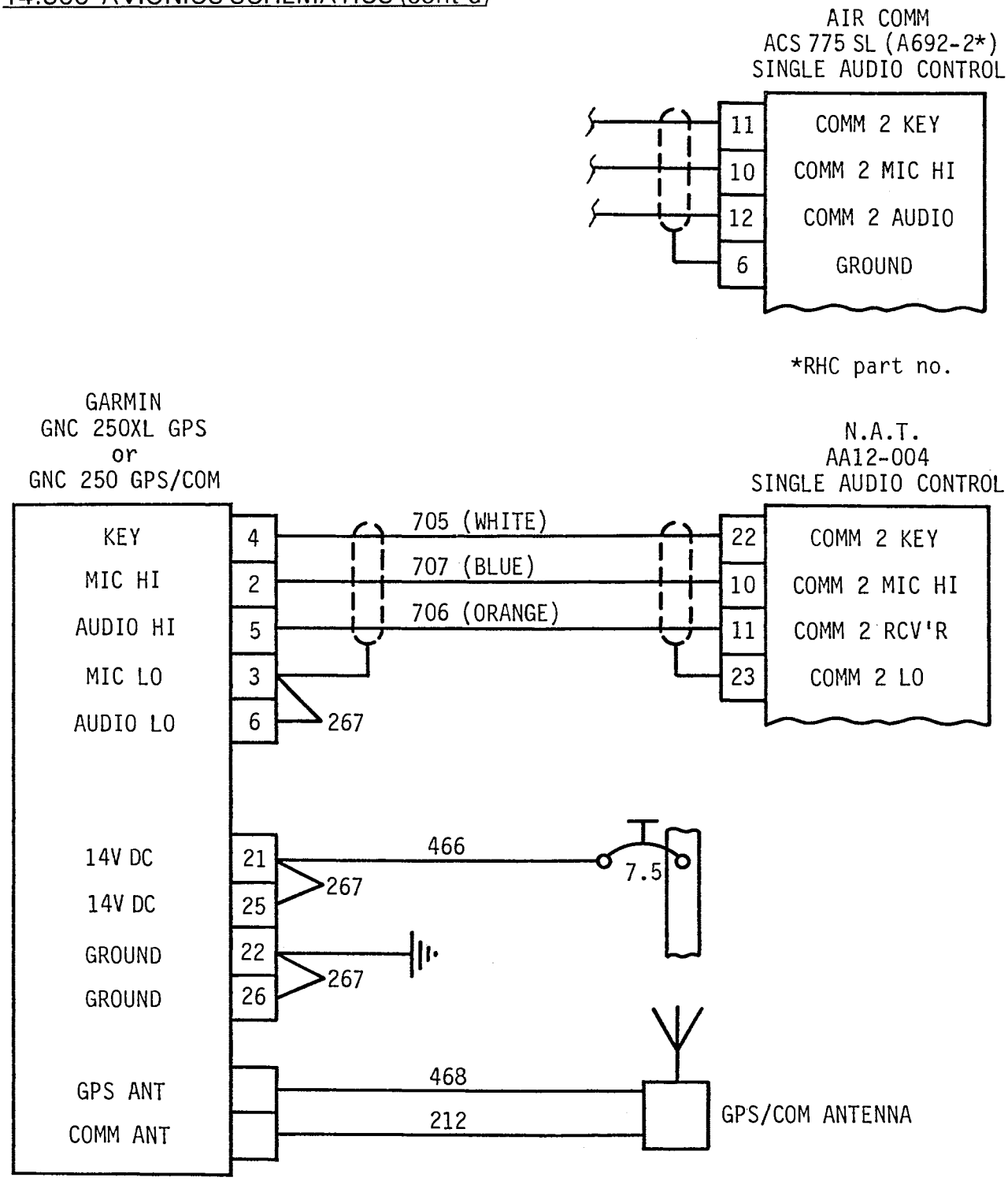

FIGURE 14-22B

GARMIN
GNC 250XL GPS and GNC 250 GPS/COM
SCHEMATIC

14.800 AVIONICS SCHEMATICS (cont'd)

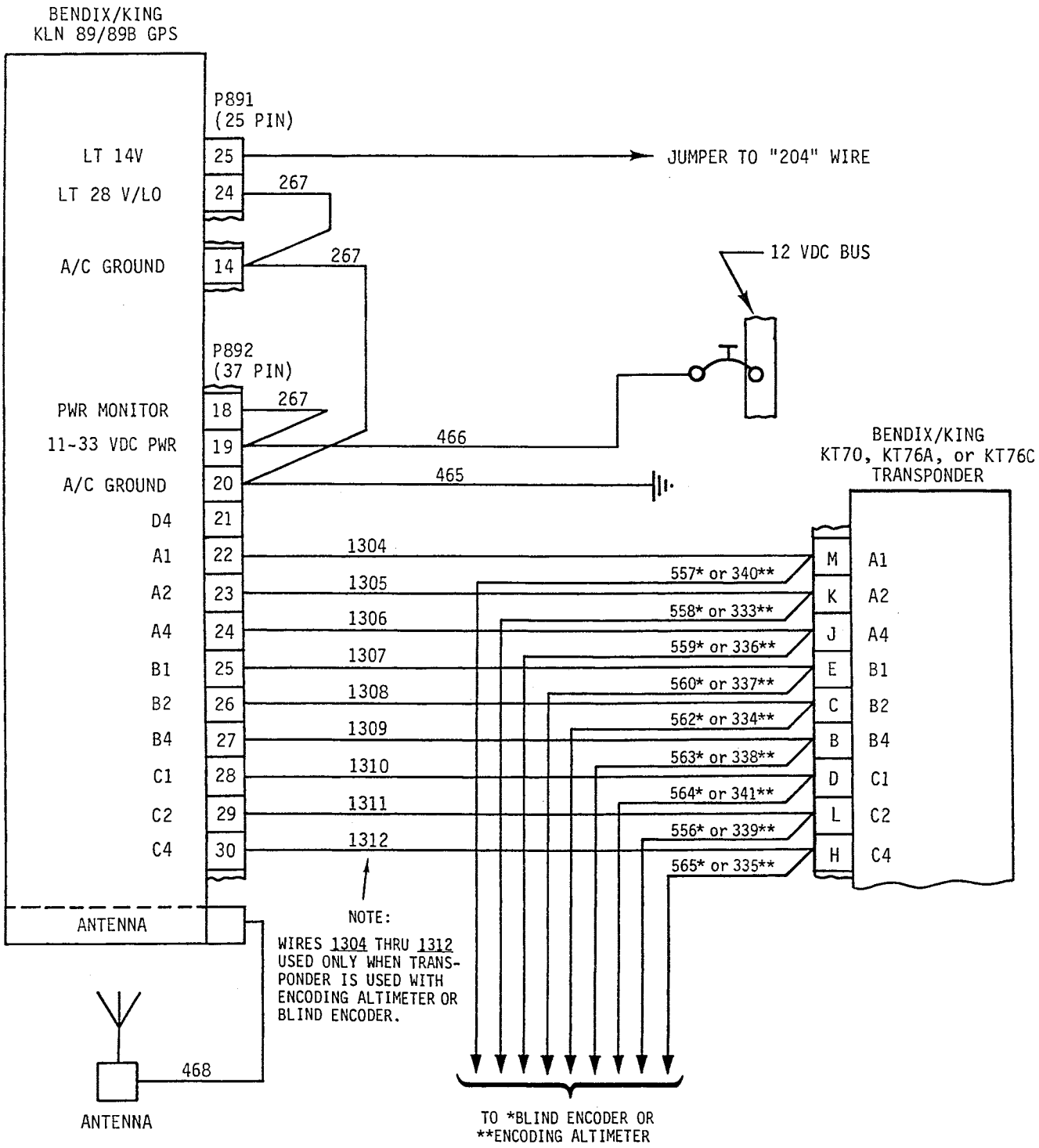

FIGURE 14-22C

BENDIX/KING KLN 89/89B GPS RECEIVER
SCHEMATIC

14.800 AVIONICS SCHEMATICS (cont'd)

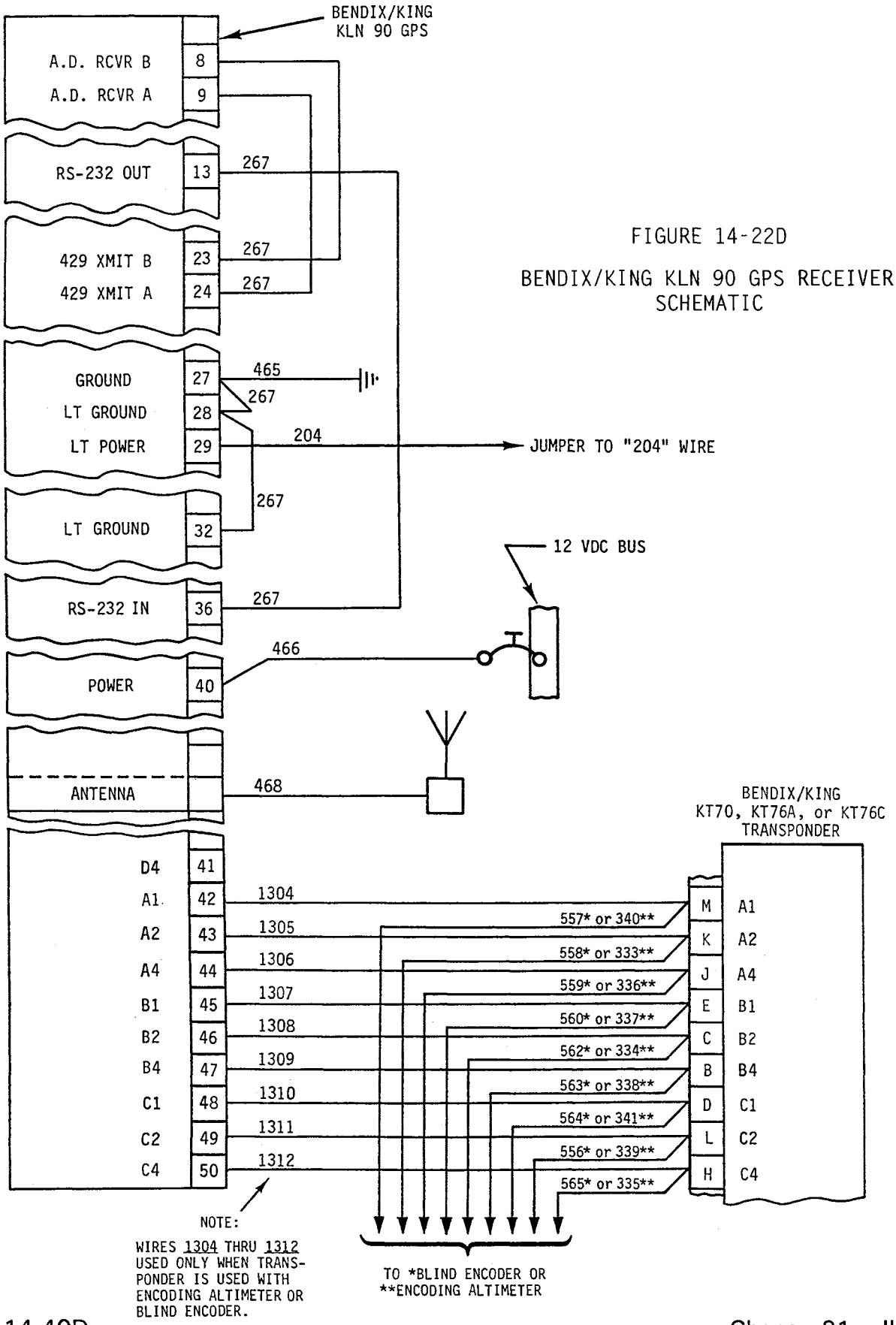

FIGURE 14-22D

BENDIX/KING KLN 90 GPS RECEIVER SCHEMATIC

14.900 UPPER CONSOLE HARNESS PLUGS (STANDARD & HP)

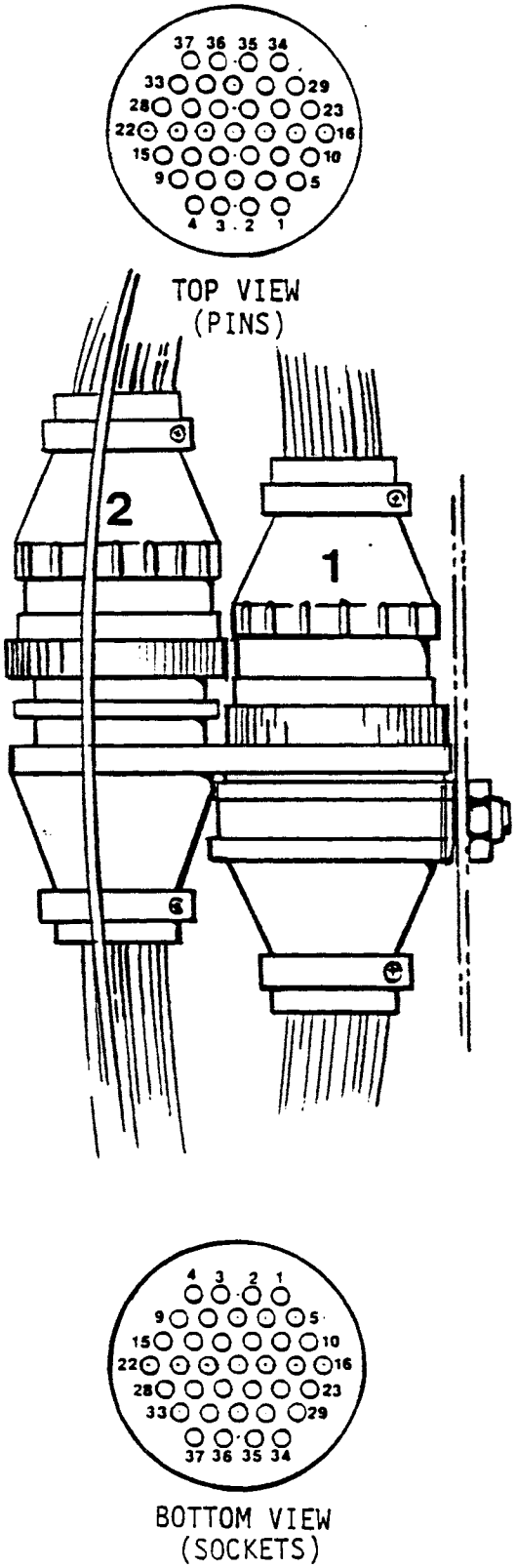

CONNECTOR 1	
PIN NO.	WIRE NO.
1	A059-2
2	A059-3
3	
4	A059-5
5	A059-6
6	A059-9
7	A059-10
8	A059-11
9	A059-12
10	A059-13
11	A059-15
12	A059-16
13	A059-17
14	A059-18
15	A059-19
16	A059-31
17	A059-34
18	A059-128
19	A059-129
20	A059-38
21	Spare
22	Spare
23	Spare
24	Spare
25	Spare
26	Spare
27	Spare
28	A059-52
29	A059
30	Spare
31	A059-58
32	A059-167
33	A059-65
34	A059-164
35	A059-67
36	A059-166
37	

CONNECTOR 2	
PIN NO.	WIRE NO.
1	Spare
2	A039-104
3	A039-105
4	A039-106
5	A039-107
6	Spare
7	A059-163
8	A052-127
9	A040-70
10	A040-71
11	A040-72
12	A040-74
13	A040-75
14	A040-76
15	A040-83
16	A040-81
17	A040-82
18	A040-80
19	A040-84
20	Spare
21	Spare
22	Spare
23	Spare
24	A053-89
25	*
26	A060-204
27	Spare
28	Spare
29	Spare
30	Spare
31	Spare
32	Spare
33	Spare
34	Spare
35	Spare
36	Spare
37	Or Avionics

* INSTALL DRAIN WIRE OF THREE-CONDUCTOR CABLE (WIRES -80,-81,-82) AT NOTED PIN.

FIGURE 14-23 UPPER CONSOLE HARNESS PLUGS

14.900 UPPER CONSOLE HARNESS PLUGS (ALPHA & SUBSEQUENT)

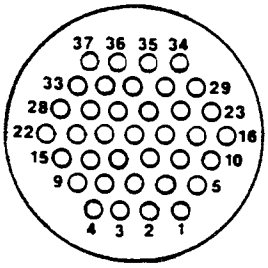

TOP VIEW
(PINS)

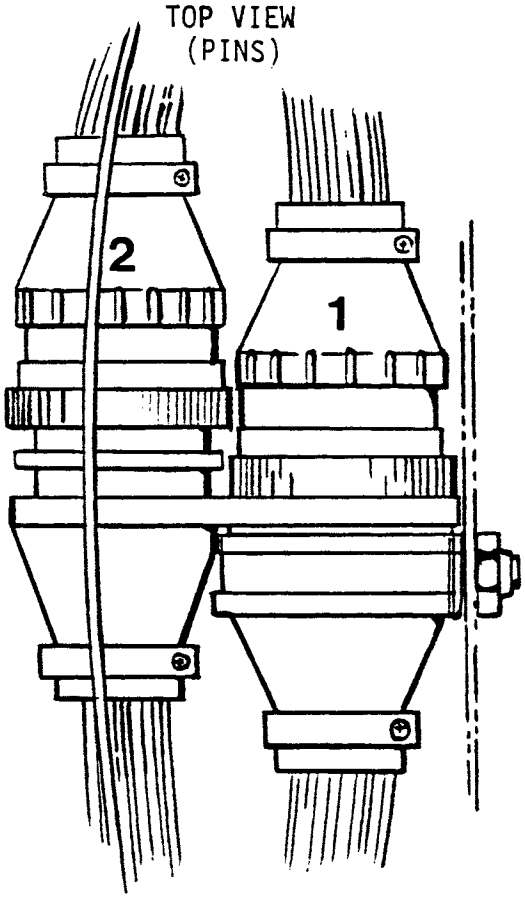

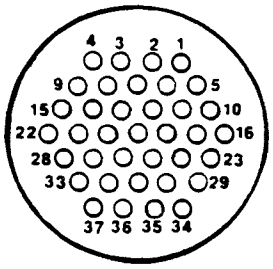

BOTTOM VIEW
(SOCKETS)

CONNECTOR 1	
PIN NO.	WIRE NO.
1	A059-2
2	A059-3
3	Spare
4	A059-5
5	A059-6
6	A059-9
7	A059-10
8	A059-11
9	A059-12
10	A059-13
11	A059-15
12	A059-16
13	A059-17
14	A059-18
15	A059-19
16	A059-31
17	A059-34
18	A059-128
19	A059-129
20	A059-38
21	Spare
22	B043-416
23	A059-513
24	Spare
25	Spare
26	Spare
27	Spare
28	A059-52
29	Spare
30	Spare
31	A059-58
32	Spare
33	A059-65
34	A059-164
35	Spare
36	A059-166
37	Spare

CONNECTOR 2	
PIN NO.	WIRE NO.
1	A059-199
2	A039-104
3	A039-105
4	A039-106
5	A039-107
6	A059-101
7	A059-163
8	A052-127
9	A040-70
10	A040-71
11	A040-72
12	A040-74
13	A040-75
14	A040-76
15	A040-83
16	A040-81
17	A040-82
18	A040-80
19	A040-84
20	Spare
21	Spare
22	Spare
23	Spare
24	Spare
25	*
26	A060-204
27	A059-28
28	A059-66
29	A059-67
30	A053-90
31	A053-91
32	A053-94
33	A053-95
34	Spare
35	A039-138
36	Spare
37	Spare

* INSTALL DRAIN WIRE OF THREE-CONDUCTOR CABLE (WIRES -80,-81,-82) AT NOTED PIN.

FIGURE 14-23A UPPER CONSOLE HARNESS PLUGS

14.1000 IFR TRAINER

14.1010 IFR Trainer Component Loads

Continuously-Powered Equipment:

Power & Accessories	Part Number	Qty.	Max. Amps Each	Total Amps
Battery relay	70-906	1	.75	.75
Alternator control	VR418-1	1	4.0	4.0
Master radio relay	W389CX-2	1	.13	.13
Night Lights				
Anti-Collision light	A470	1	3.2	3.2
Position lights	A7512/1777	3	2.2	6.6
Instrument lights	330	9	.08	.72
Instruments				
Engine gage cluster	A617/B144	1	.50/.60	.50/.60
Dual tachometer	A792-1	1	.10	.10
Hourmeter	773	1	.03	.03
Carb Air temp	A604	1	.13	.13
Ammeter shunt	MLS-60-100	1	.50	.50
Digital OAT gage	310-2	1	.13	.13
Miscellaneous				
Heater blower	A643-1	1	7.5	7.5
			TOTAL =	24.29

Complete Avionics Panel for Instrument Trainer

COM/NAV Receiver	KX165	1	.70	.70
NAV Receiver	NAV121	1	.87	.87
Transponder	KT76A	1	1.80	1.80
ADF	KR87	1	1.24	1.24
Horizon ref ind	AIM500	1	1.80	1.80
Marker beacon	KR22	1	.50	.50
Turn coordinator	303700	1	.50	.50
Encoding altimeter	KE127	1	.12	.12
HSI	KI525A	1	.23	.23
Gyro	KG102A	1	3.0	3.0
			TOTAL =	10.76

14.1010 IFR Trainer Component Loads (cont'd)

Intermittently-Powered Equipment:

Starting Accessories	Part Number	Qty.	Max Amps Each	Total Amps
Starter relay	SAZ4201E	1	4.5	4.5
Starting vibrator	10-176487-121	1	2.5	2.5
Starter motor	MZ4224	1	150	150
Drive System				
Belt tension actuator	5A505-3	1	1.2	1.2
Lights				
Warning lights	330	8	.08	.64
Landing lights	4509	2	7.7	15.4
Miscellaneous				
Map light	A-1425A-2-12	1	.58	*.58
Landing light relay	MB-1380	1	.20	.20
Low RPM horn & relay	16004042-W101PCX	1	.35	.35
			TOTAL =	*16.18

Instrument Trainer Avionics				
COM Transmitter	KX165	1	*6.8	*6.8

14.1020 IFR Trainer Console Access

Pull circuit breakers on all gyro instruments and allow 5 minutes for gyro run down to prevent gyro damage.

See R22 operator manual for caging instructions upon power application.

Remove (6) screws holding faceplate to console and carefully pull faceplate and instruments forward.

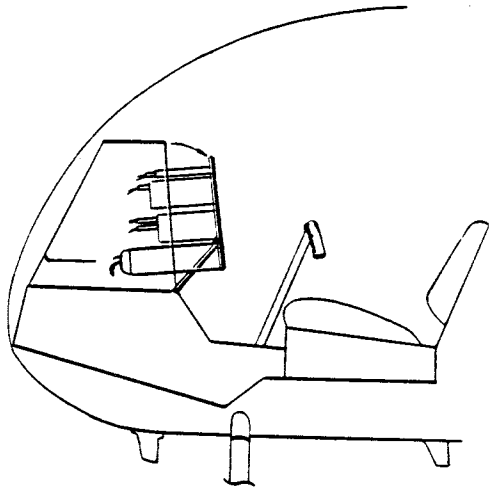

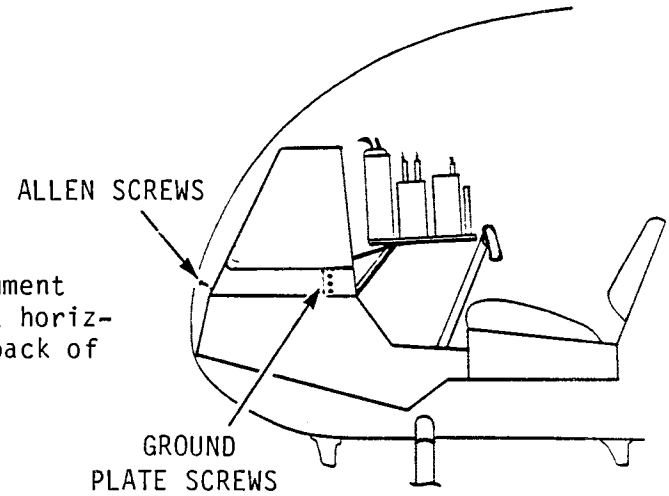

With cyclic full aft, instrument faceplate will now rotate to a horizontal position for access to back of instruments.

If console shell needs to be removed for access, place support under faceplate as shown.

Remove three ground plate screws from each side of console.

Remove two allen head screws in nose of console. Remove two screws from each side of console.

Disconnect wiring from horn, horn relay, and low RPM unit attached to console shell.

Carefully remove console shell.

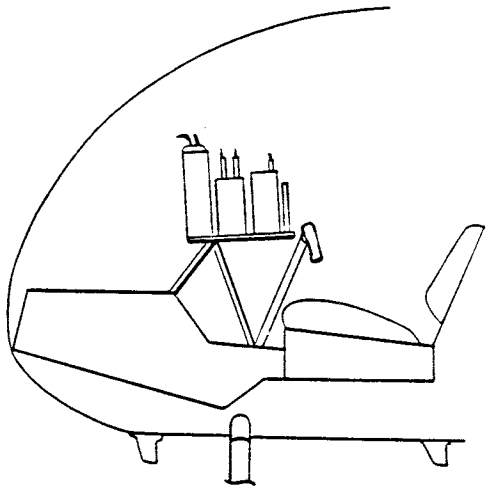

14.1030 IFR Trainer Component Location

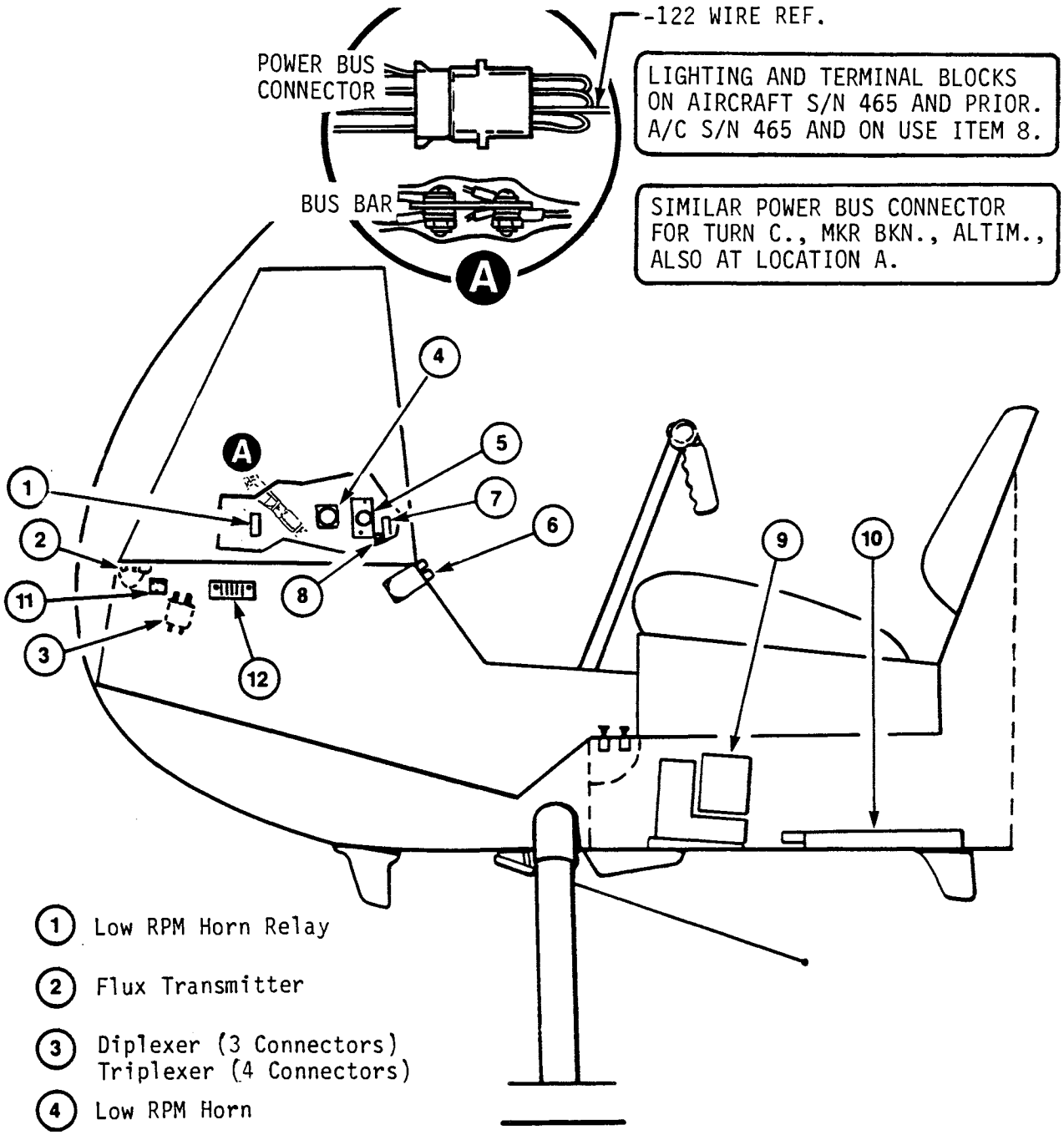

1. Low RPM Horn Relay
2. Flux Transmitter
3. Diplexer (3 Connectors)
   Triplexer (4 Connectors)
4. Low RPM Horn
5. Low Rpm Unit
6. Slave Control
7. Ground Panel
8. Terminal Block, Lighting (Used on A/C after S/N 465)
9. Directional Gyro-Remote (Left Baggage Compartment)
10. DME-Remote (Left Baggage Compartment)
11. Terminal Block, Gyro Ground Wires
12. Terminal Block, Audio

FIGURE 14-24 IFR TRAINER COMPONENT LOCATION

14.1040 IFR Trainer Avionics Schematics

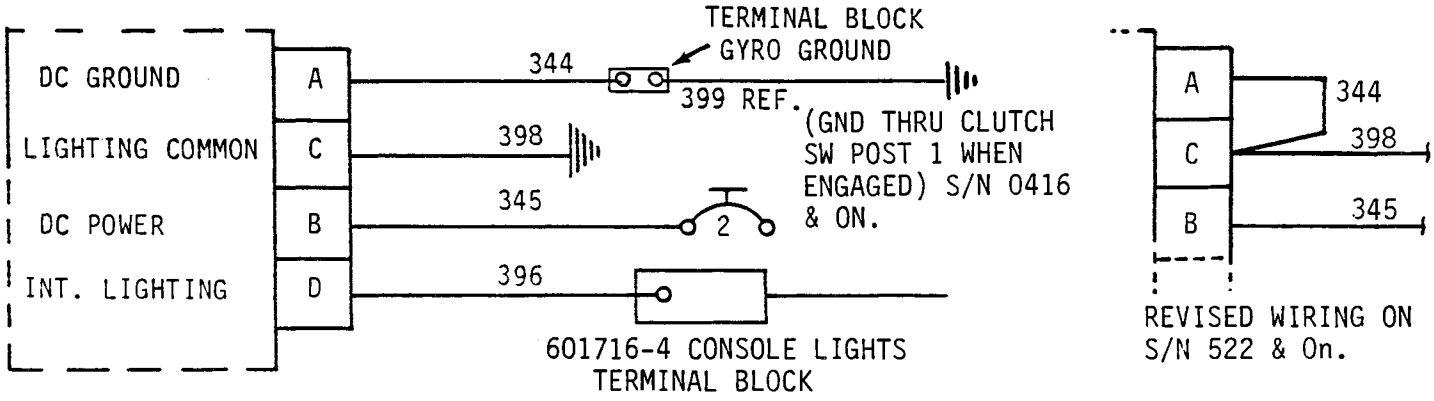

AIM 500 HORIZONTAL REFERENCE INDICATOR

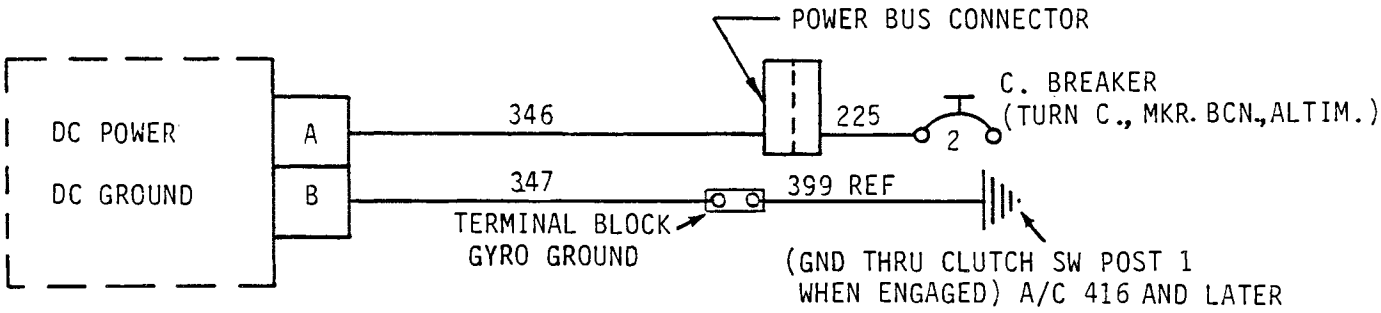

ASTRONAUTICS 303700 TURN COORDINATOR

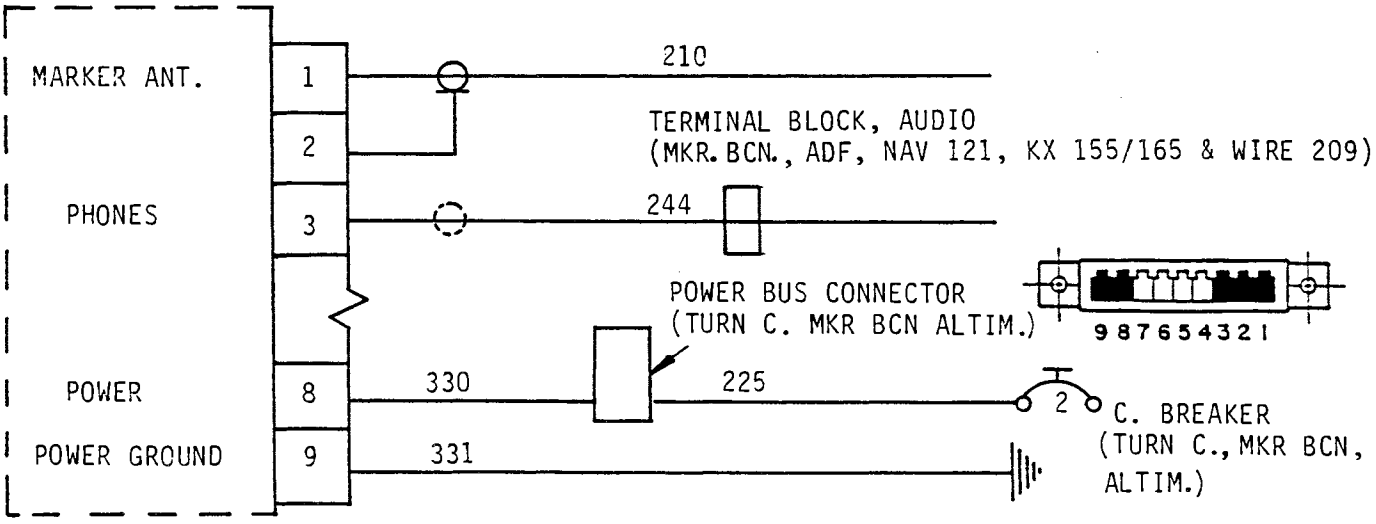

KING KR 22 MARKER BEACON

14.1040 (cont'd)

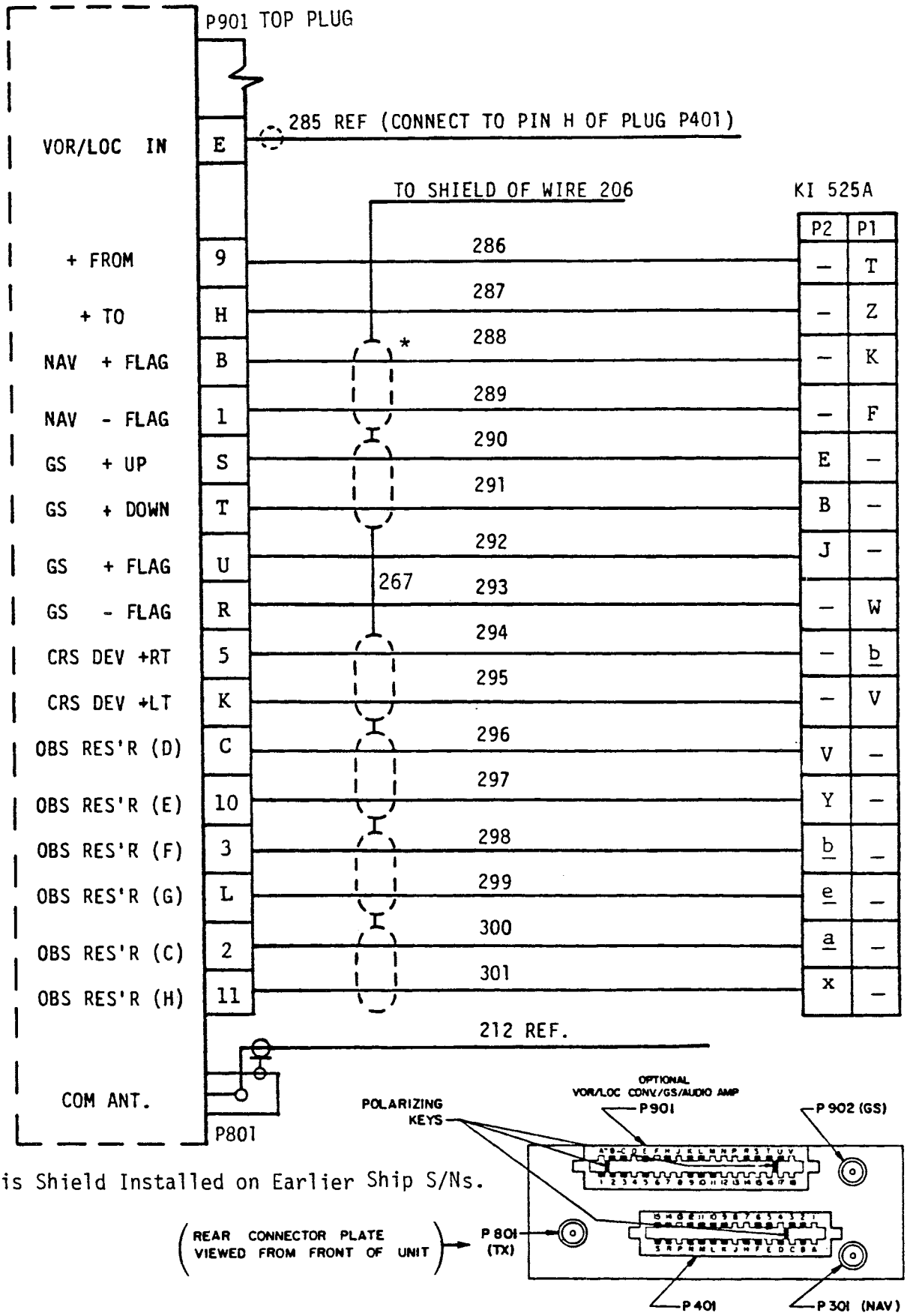

*This Shield Installed on Earlier Ship S/Ns.

 FIGURE 14-26 KING KX 165 VHF NAV/COM TRANSCEIVER (TOP PLUG)

14.1040 (cont'd)

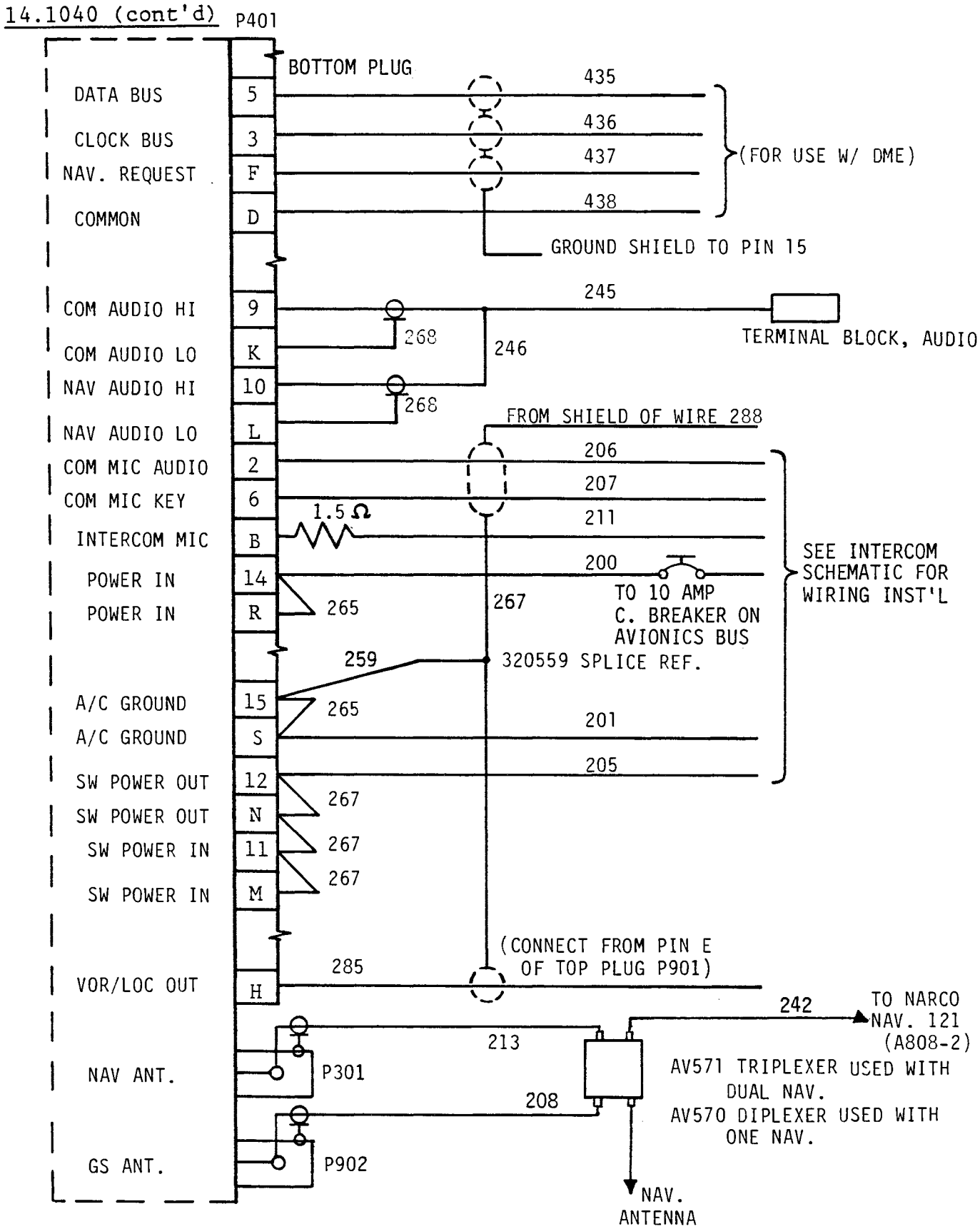

14.1040 (cont'd)

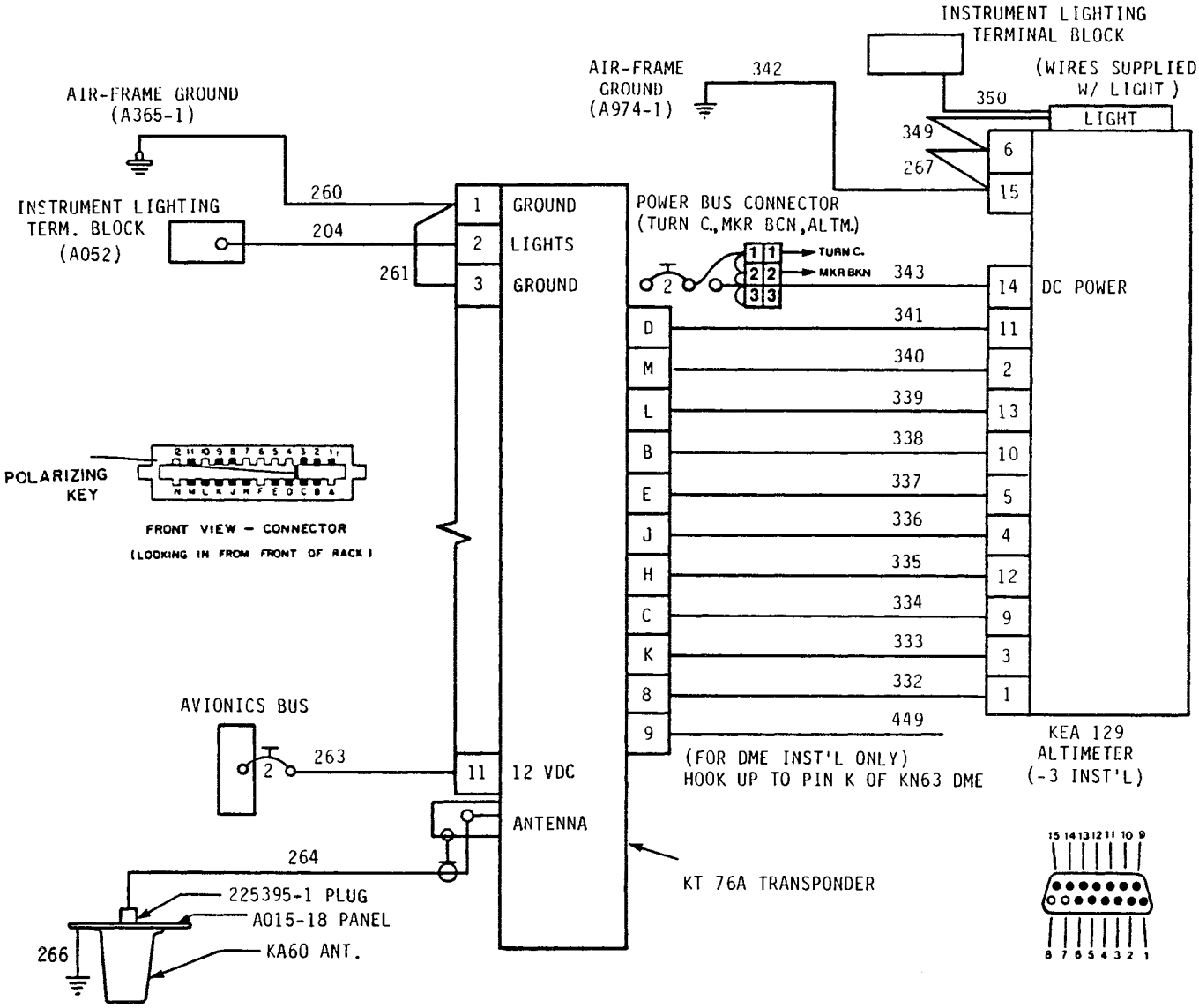

FIGURE 14-27 KING KT76A TRANSPONDER
WITH
KING KEA 129 ENCODING ALTIMETER

14.1040 (cont'd)

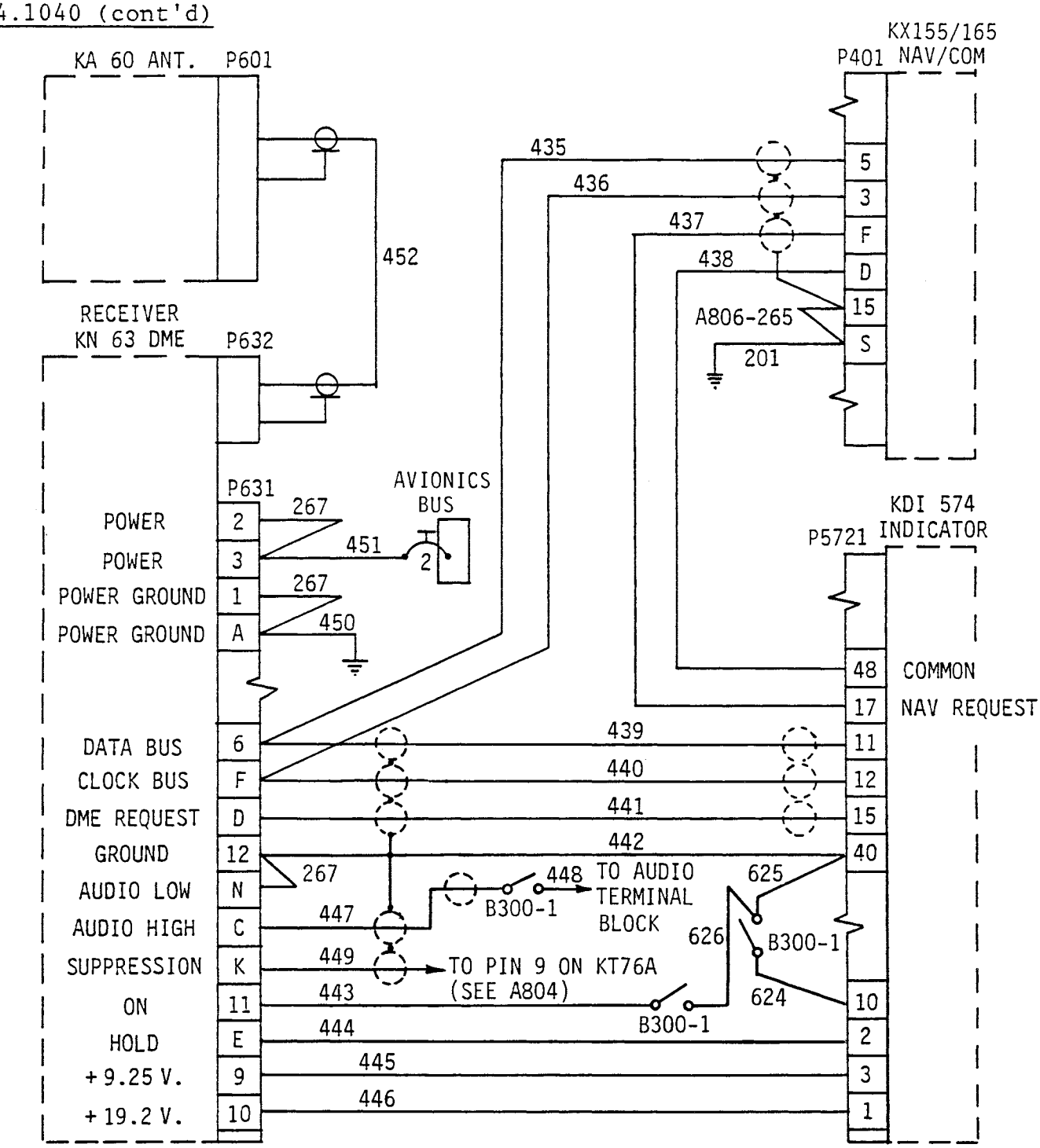

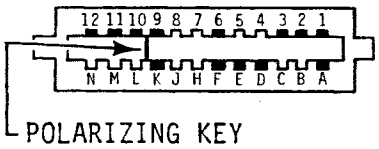

FRONT VIEW CONNECTOR (LOOKING IN FROM RECEIVER)

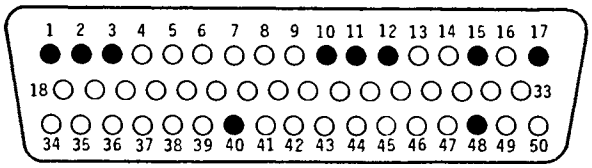

FIGURE 14-28 KING KN63 DME

KDI 574 CONNECTOR P5741/ J5741 PIN 5 KEYED PIN VIEW OF MALE OR SOLDER CUP VIEW OF FEMALE CONNECTOR.

14.1040 (cont'd)

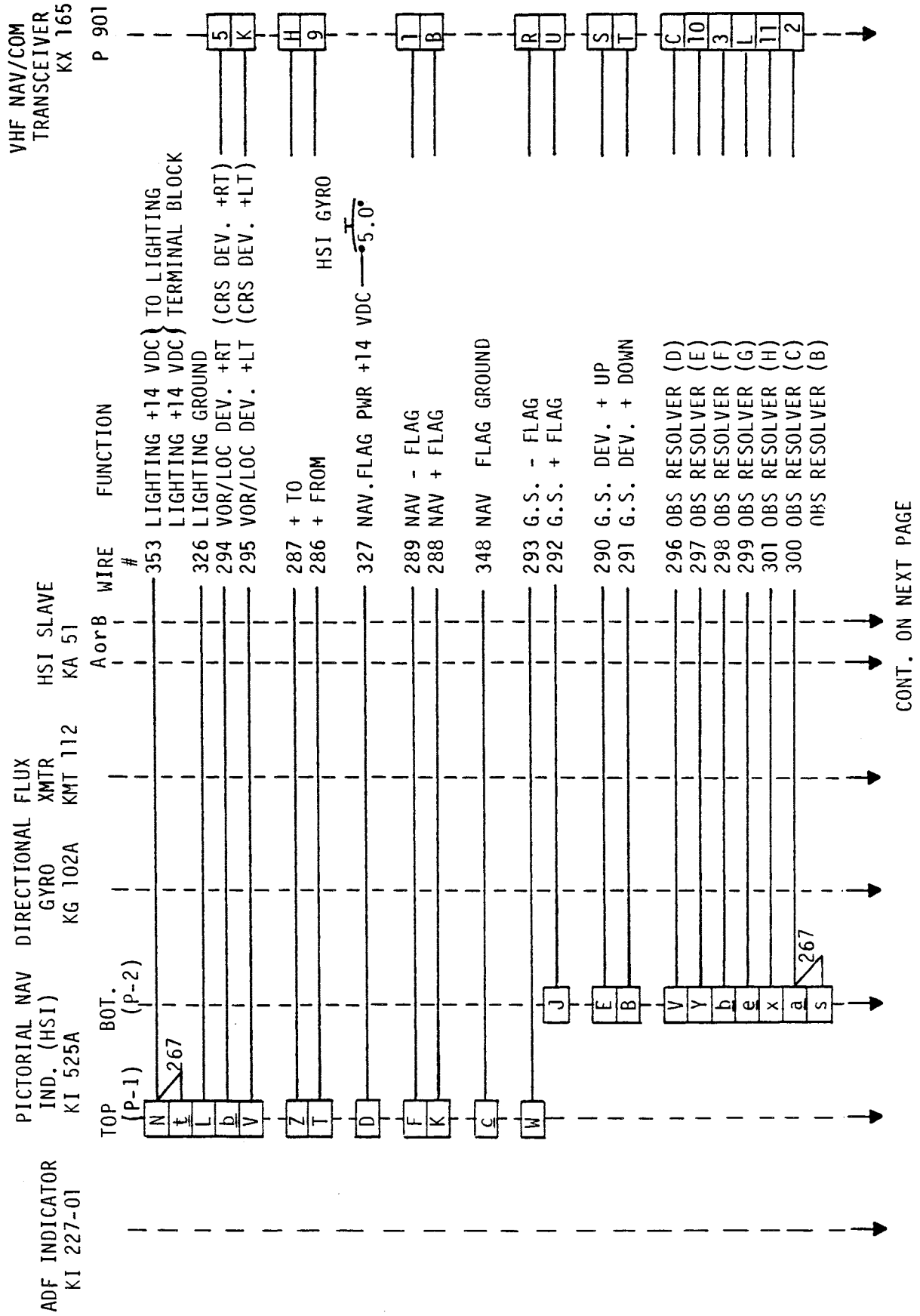

 FIGURE 14-29A KING KCS 55A PICTORAL NAV SYSTEM

14.1040 (cont'd)

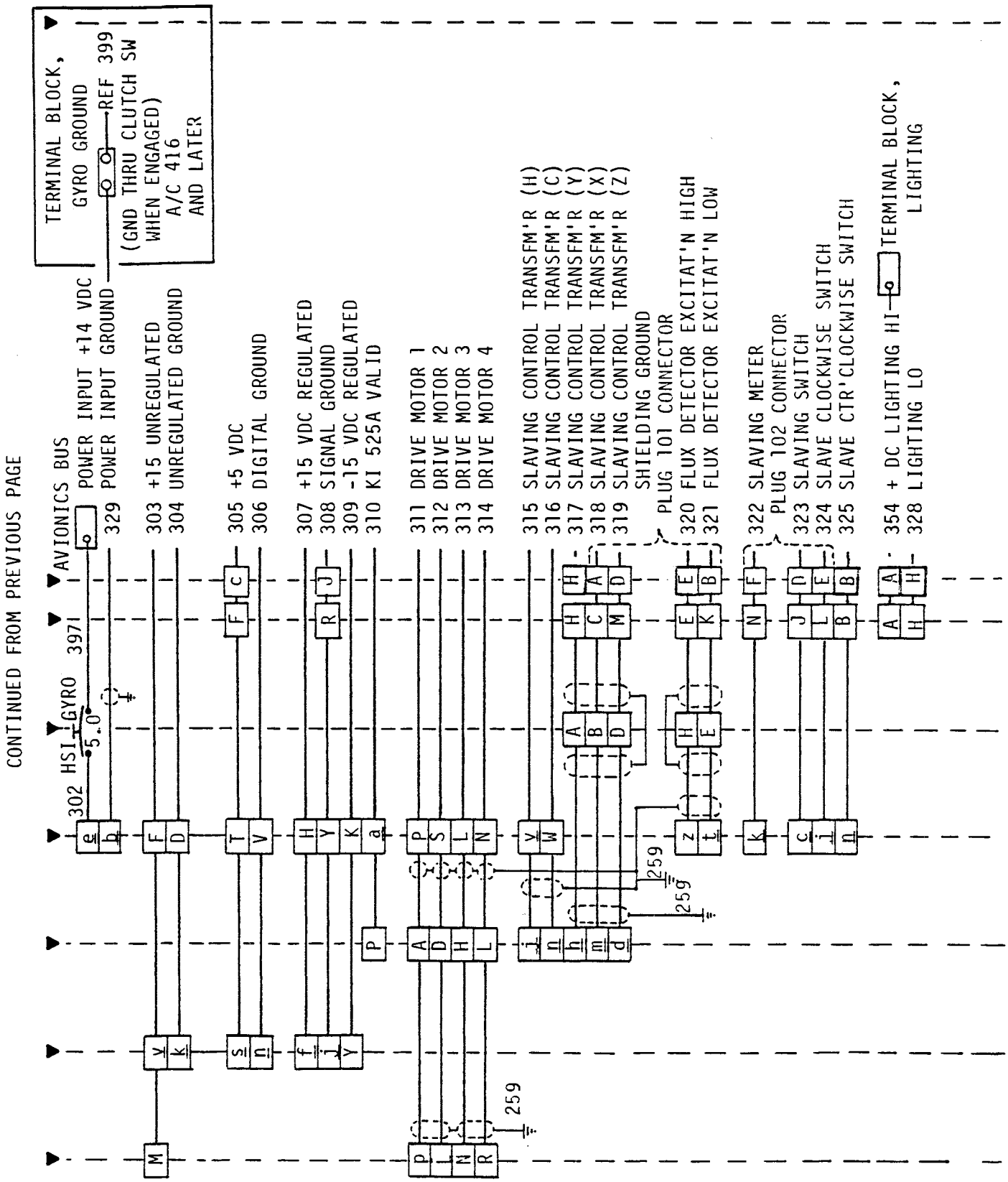

14.1040 (cont'd)

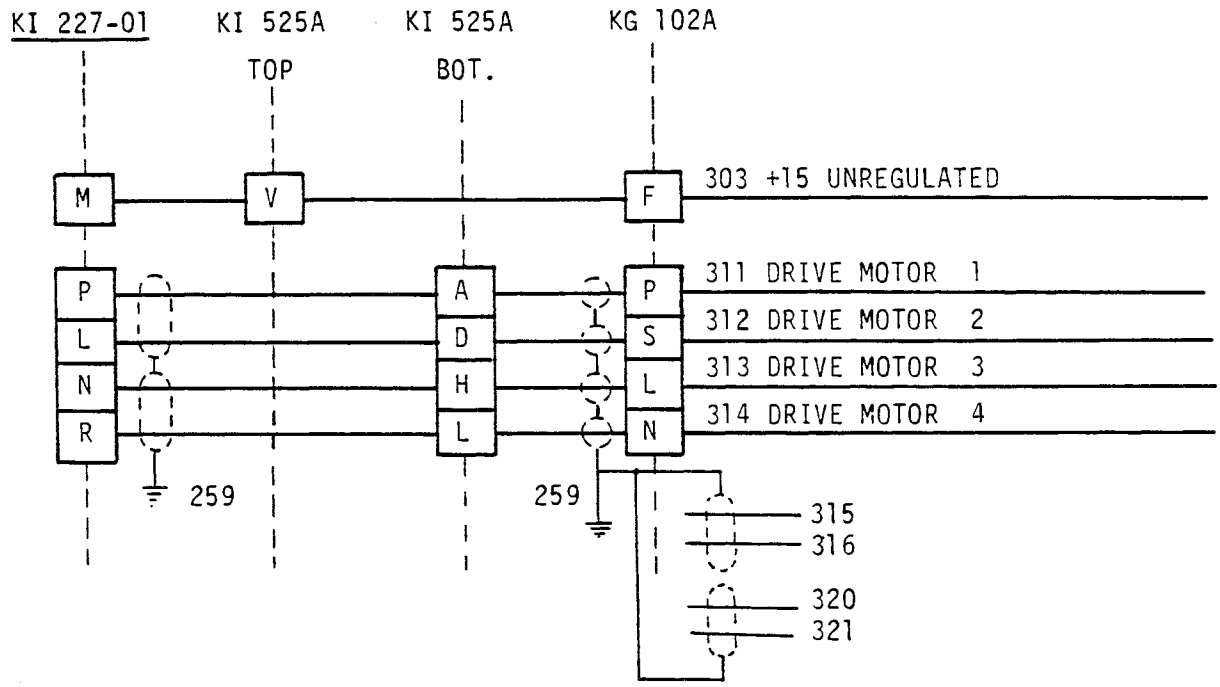

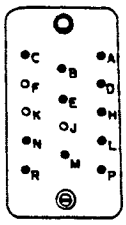

CONNECTOR
VIEWED FROM
REAR OF UNIT

FIGURE 14-30 KING KI 227-01 ADF INDICATOR

14.1040 (cont'd)

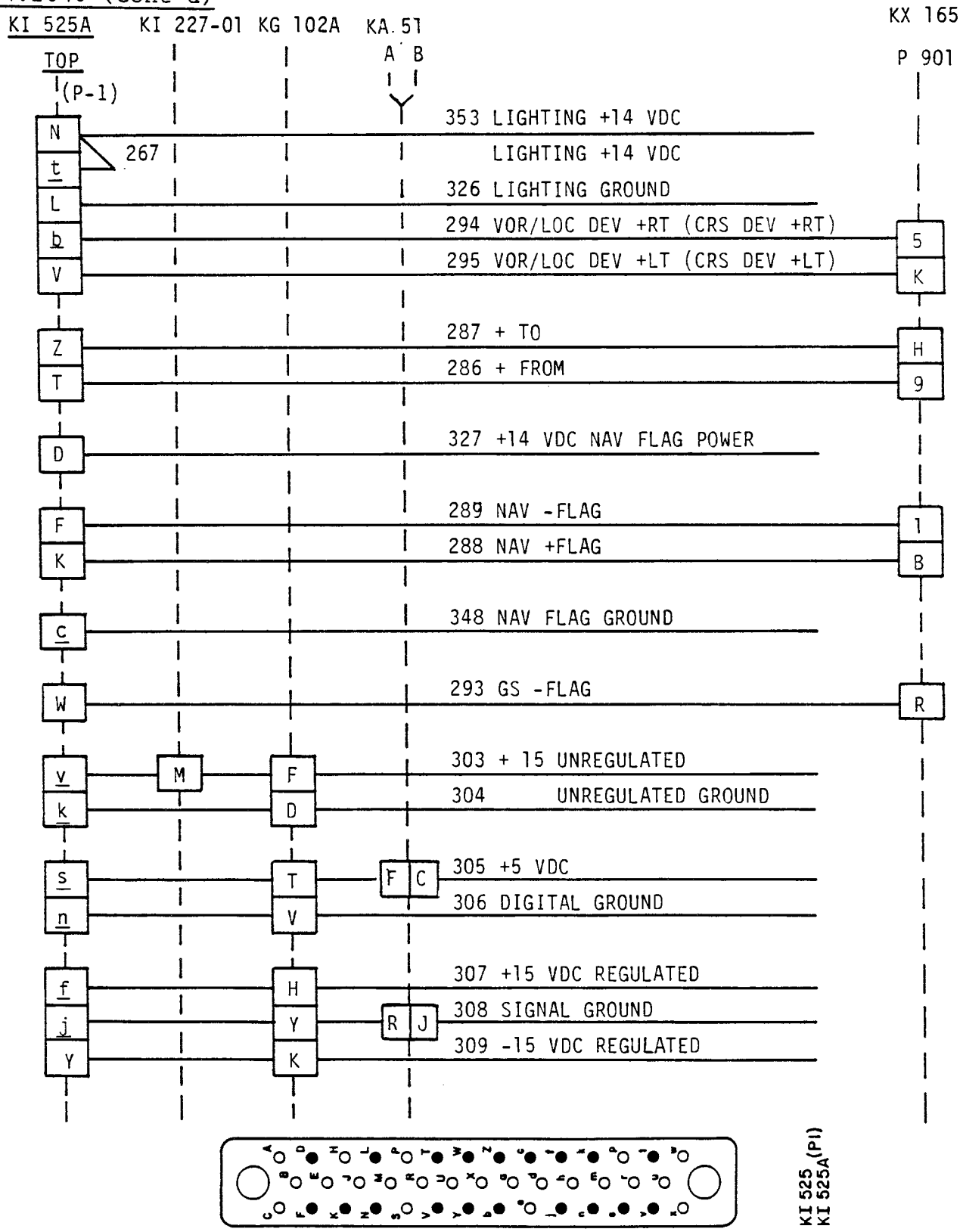

FIGURE 14-31A KI 525A PICTORAL NAV INDICATOR (TOP PLUG)

14.1040 (cont'd)

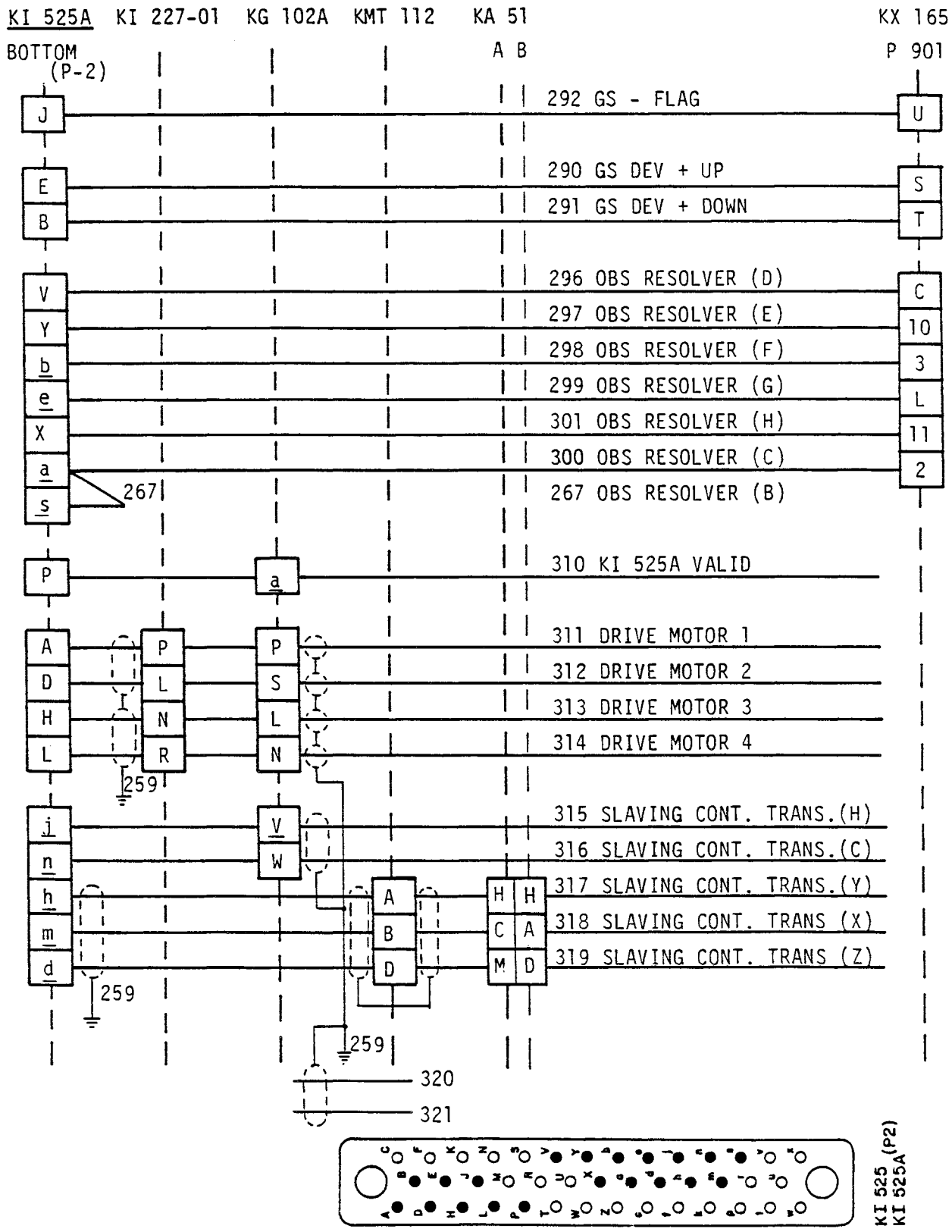

FIGURE 14-31B KI 525A PICTORAL NAV INDICATOR (BOTTOM PLUG)

14.1040 (cont'd)

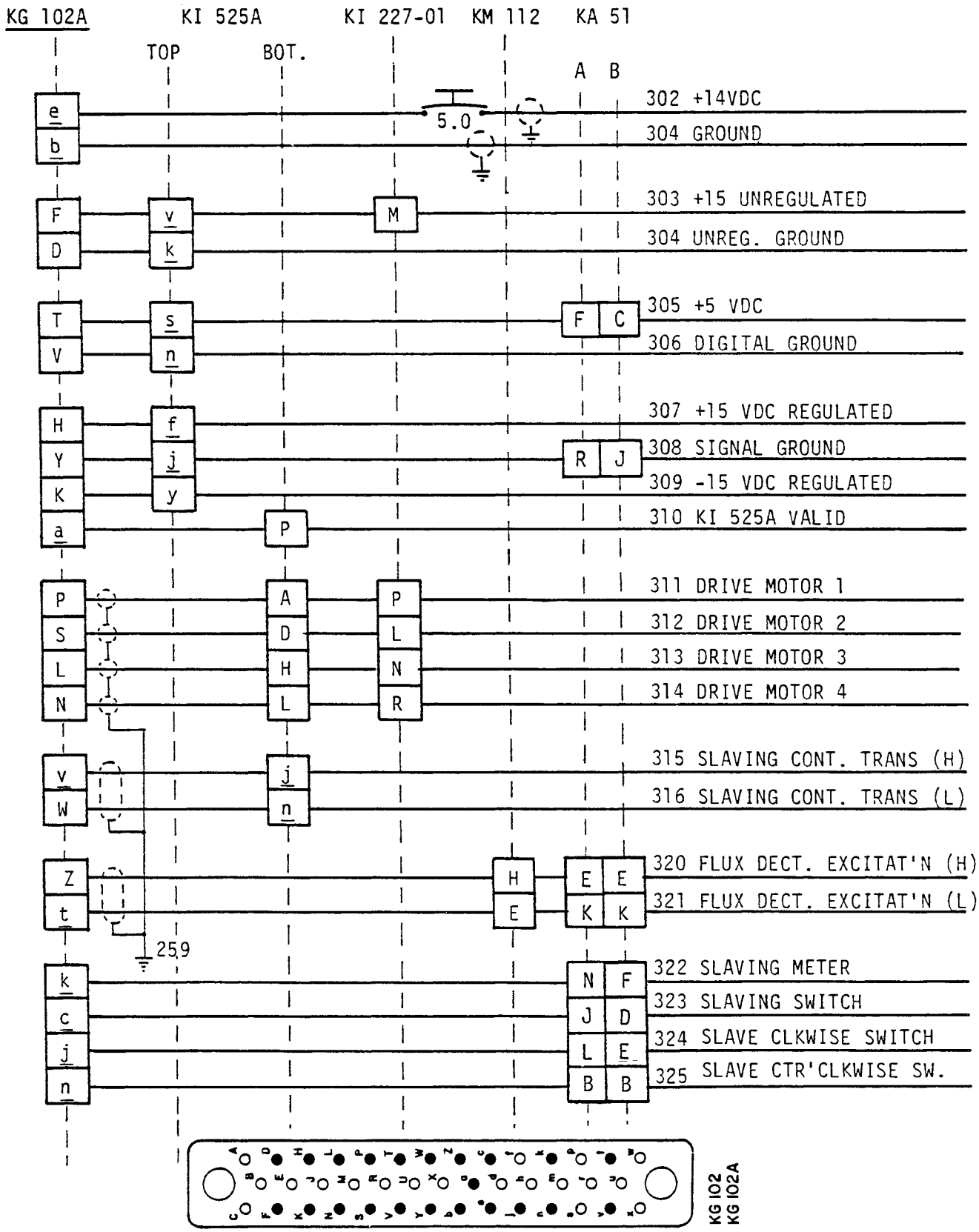

14.1040 (cont'd)

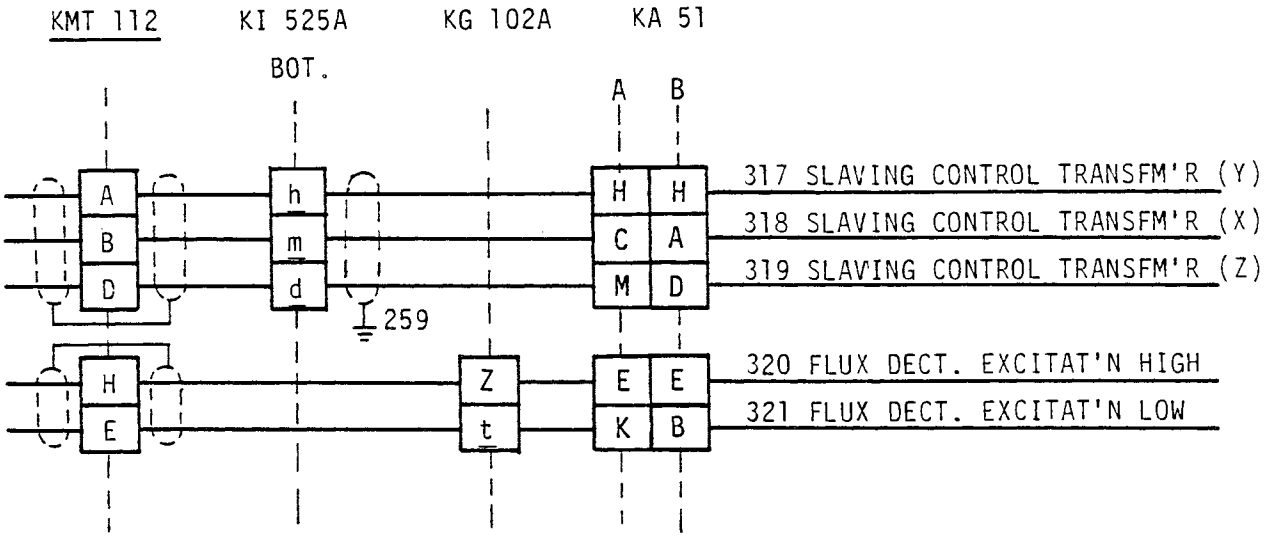

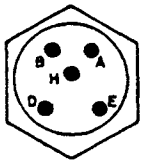

KMT 112

FIGURE 14-33 KING KMT 112 FLUX TRANSMITTER

14.1040 (cont'd)

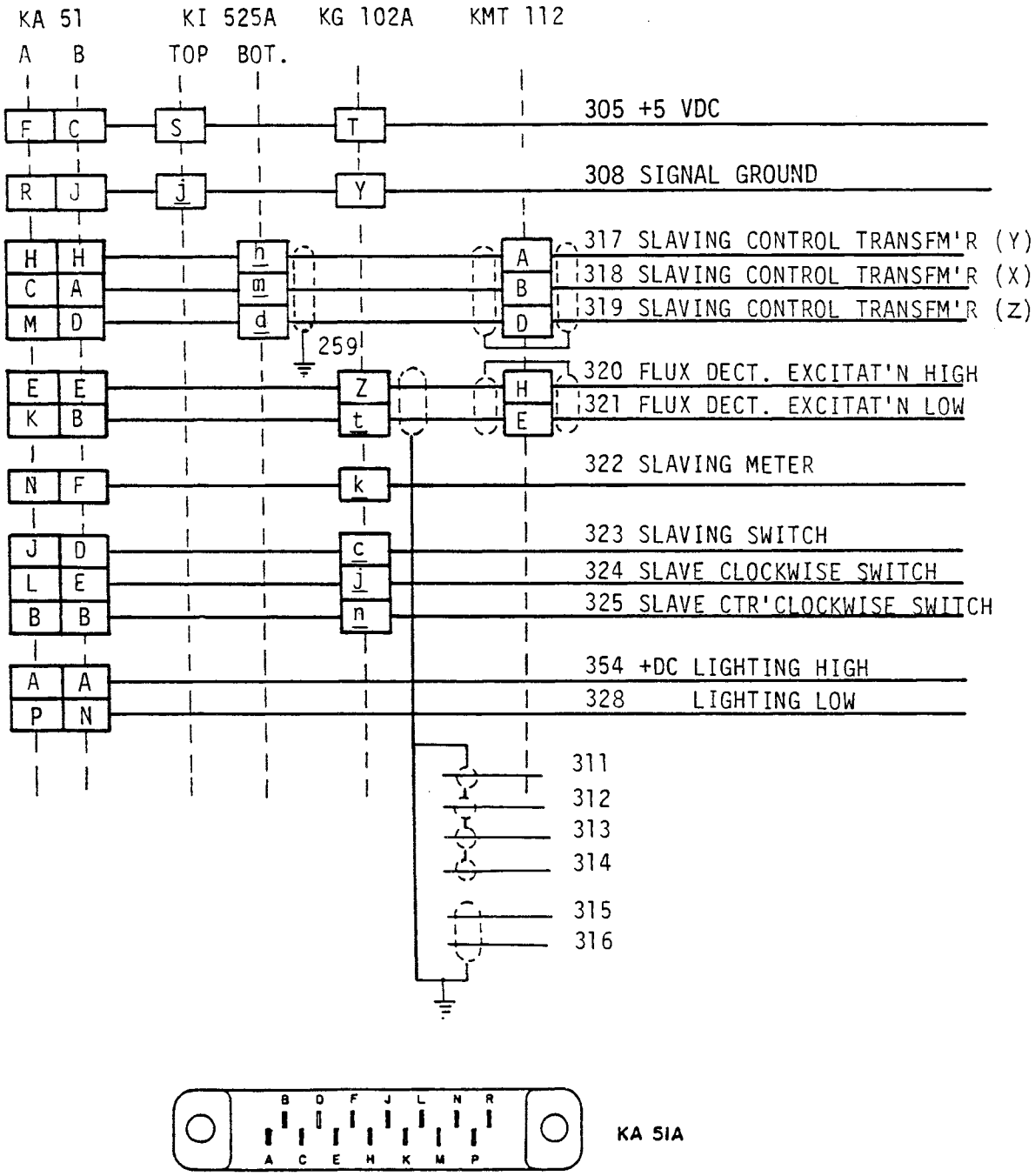

FIGURE 14-34 KING KA 51 (A & B) SLAVING ACCESSORY

14.1100 R22 MARINER

14.1110 R22 Mariner Avionics Schematics

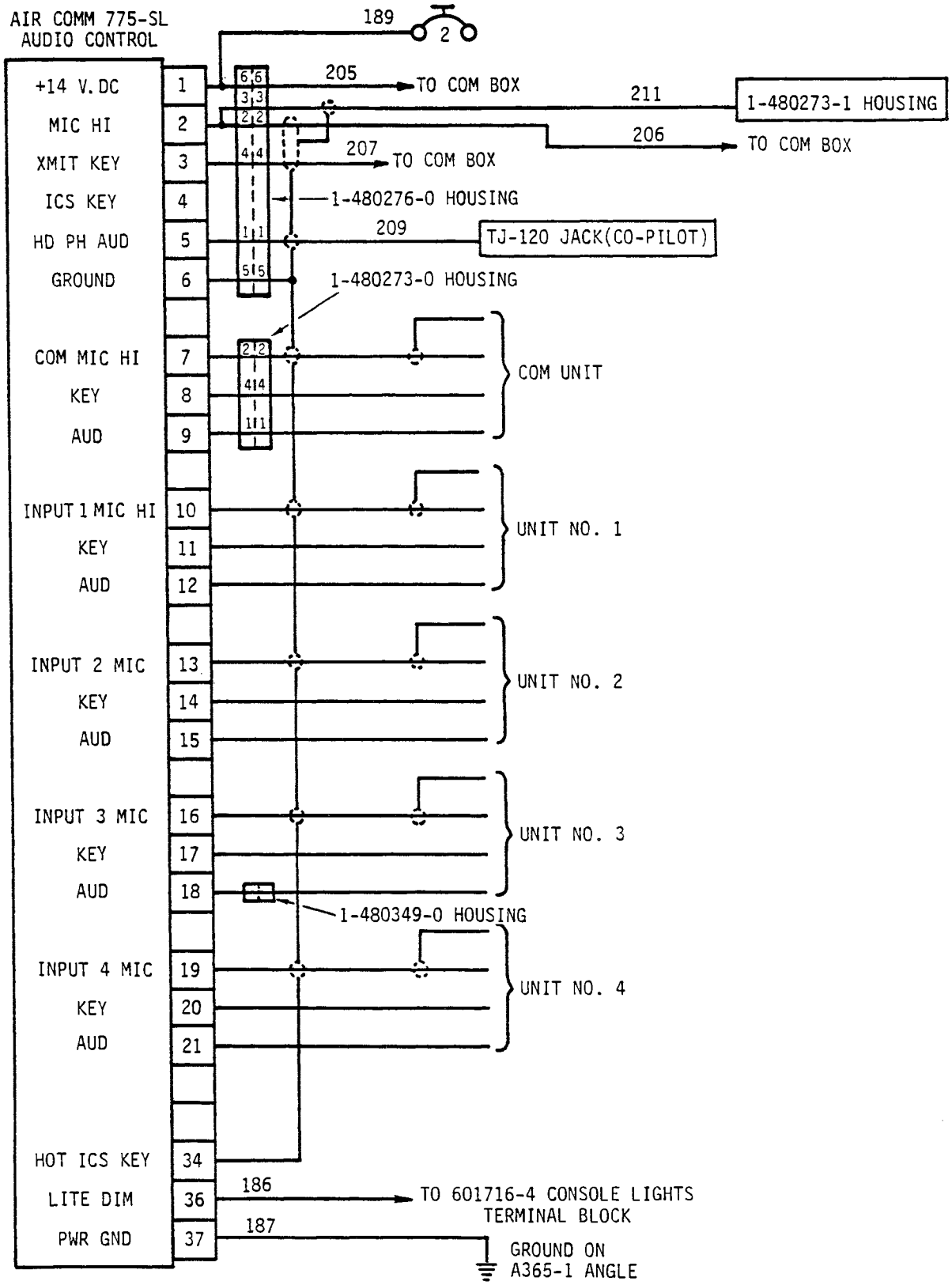

FIGURE 14-35 AIR COMM 775-SL AUDIO CONTROL

14.1110 (cont'd)

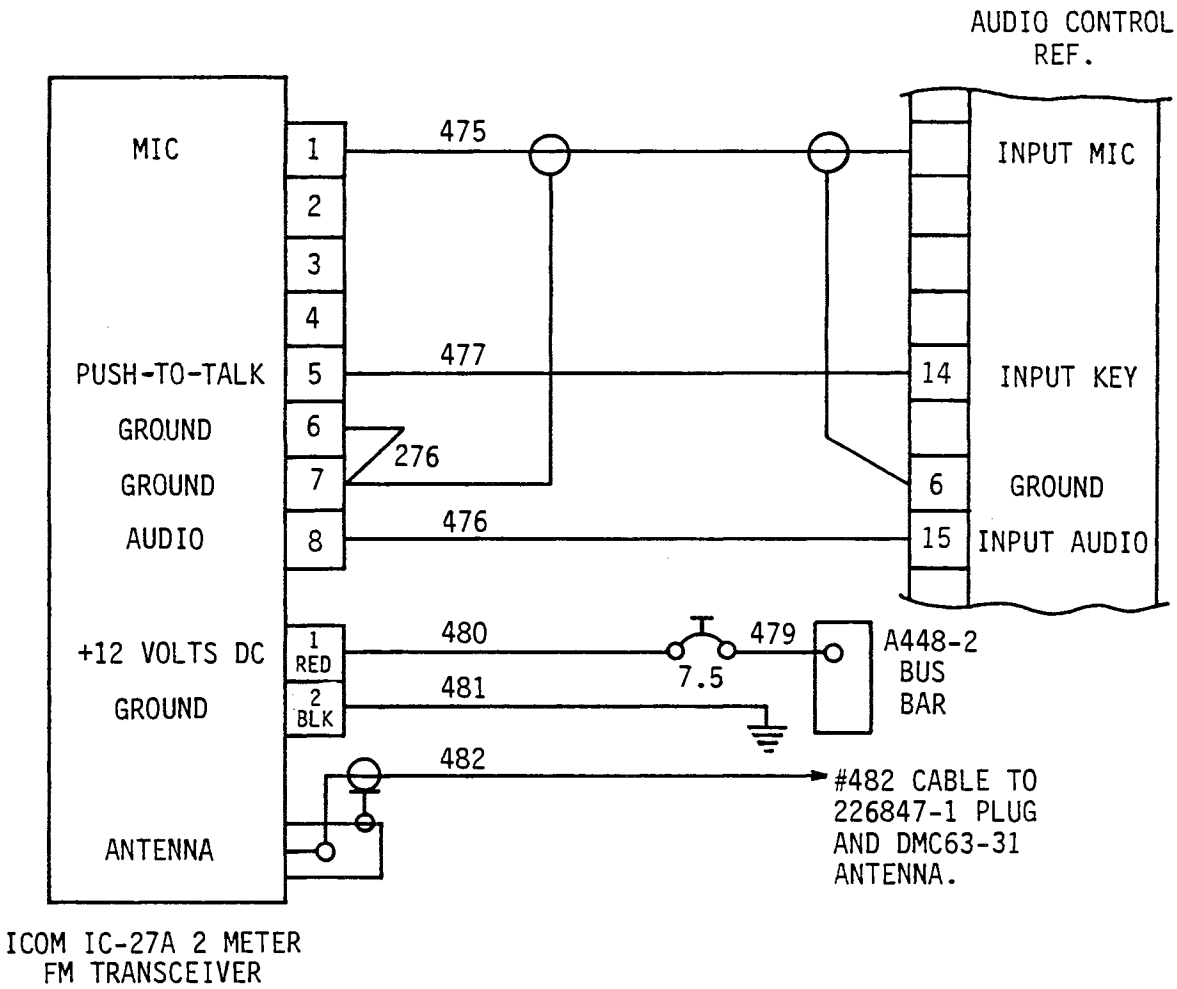

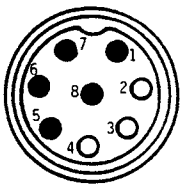

(LOOKING
TOWARD
AIRCRAFT)

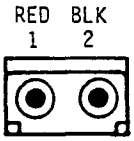

AUDIO/MIC
CONNECTOR

POWER
CONNECTOR

FIGURE 14-36 ICOM IC-27A 2-METER FM TRANSCEIVER

14.1110 (cont'd)

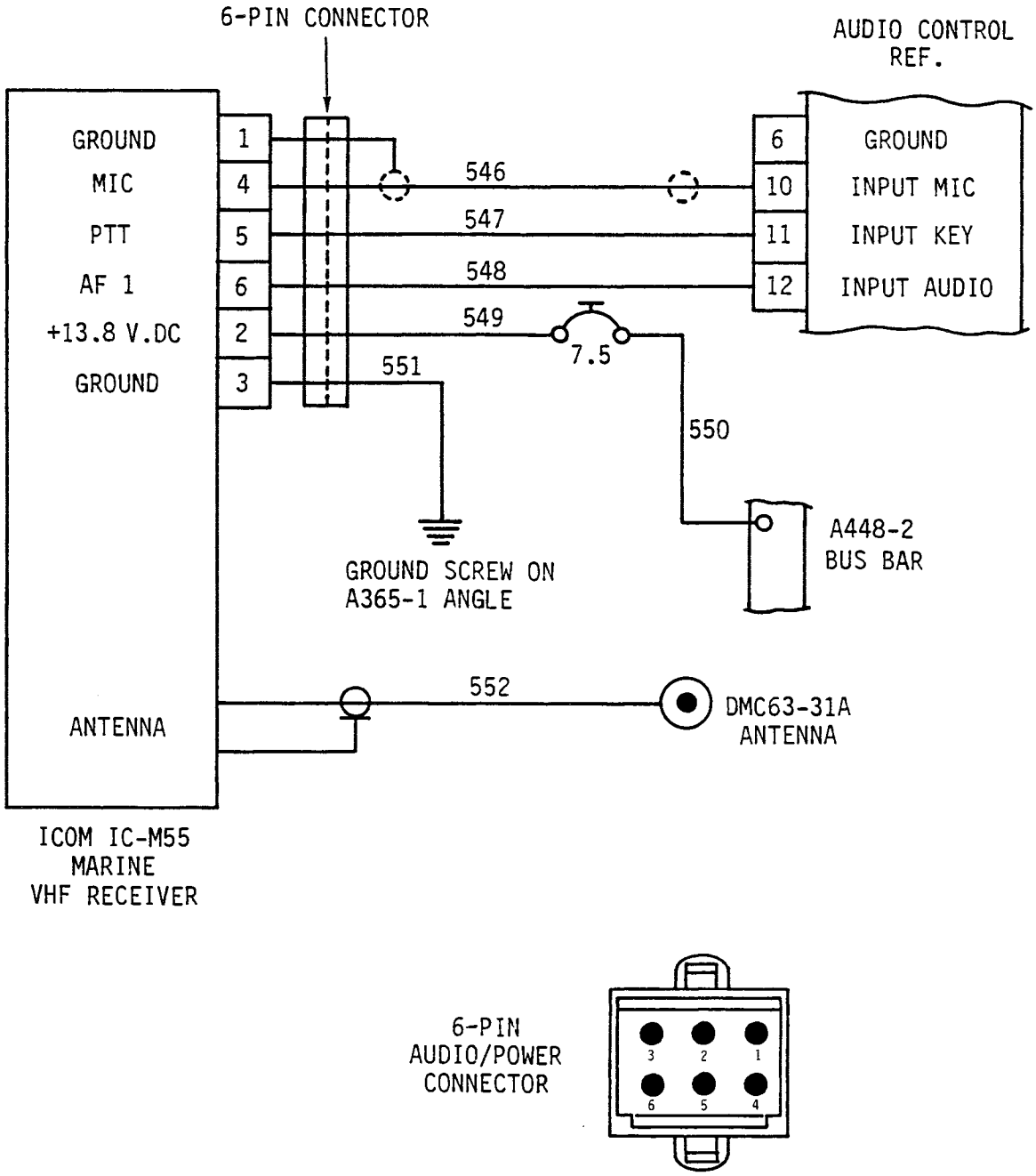

FIGURE 14-37 ICOM IC M55 MARINE VHF RECEIVER

14.1110 (cont'd)

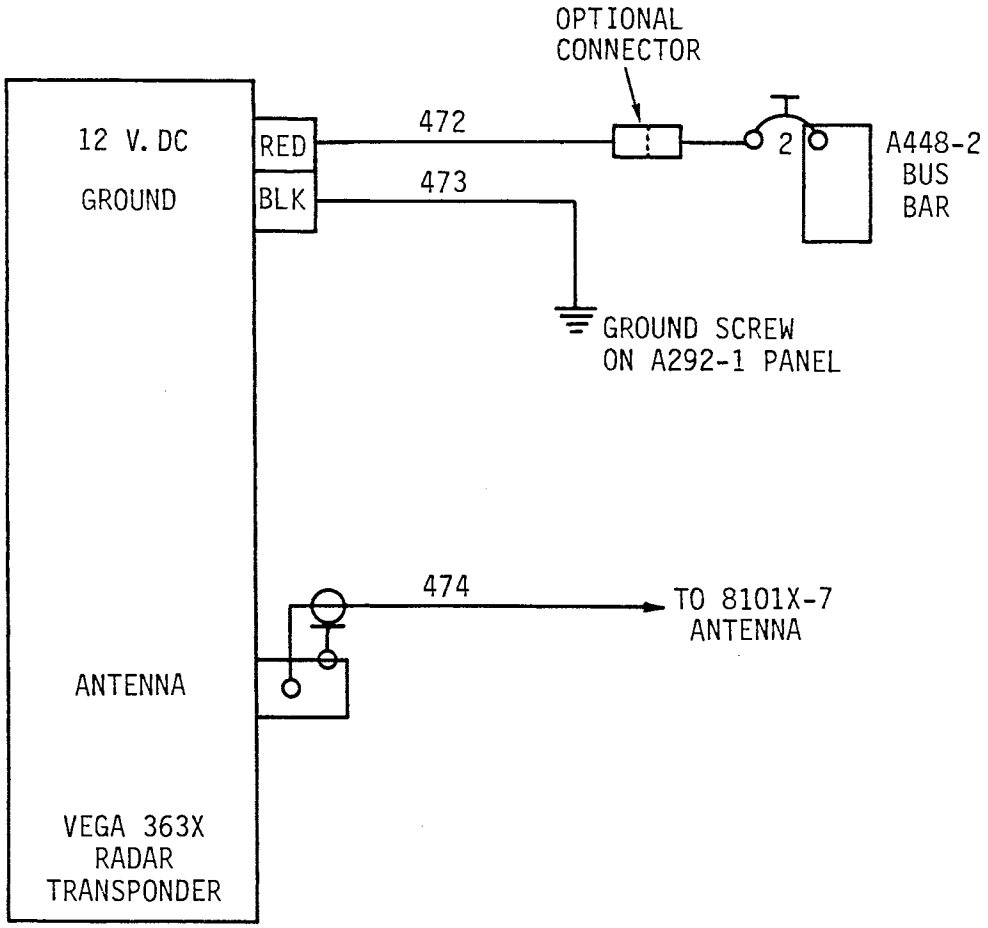

FIGURE 14-38 VEGA 363X RADAR TRANSPONDER

This page intentionally left blank.

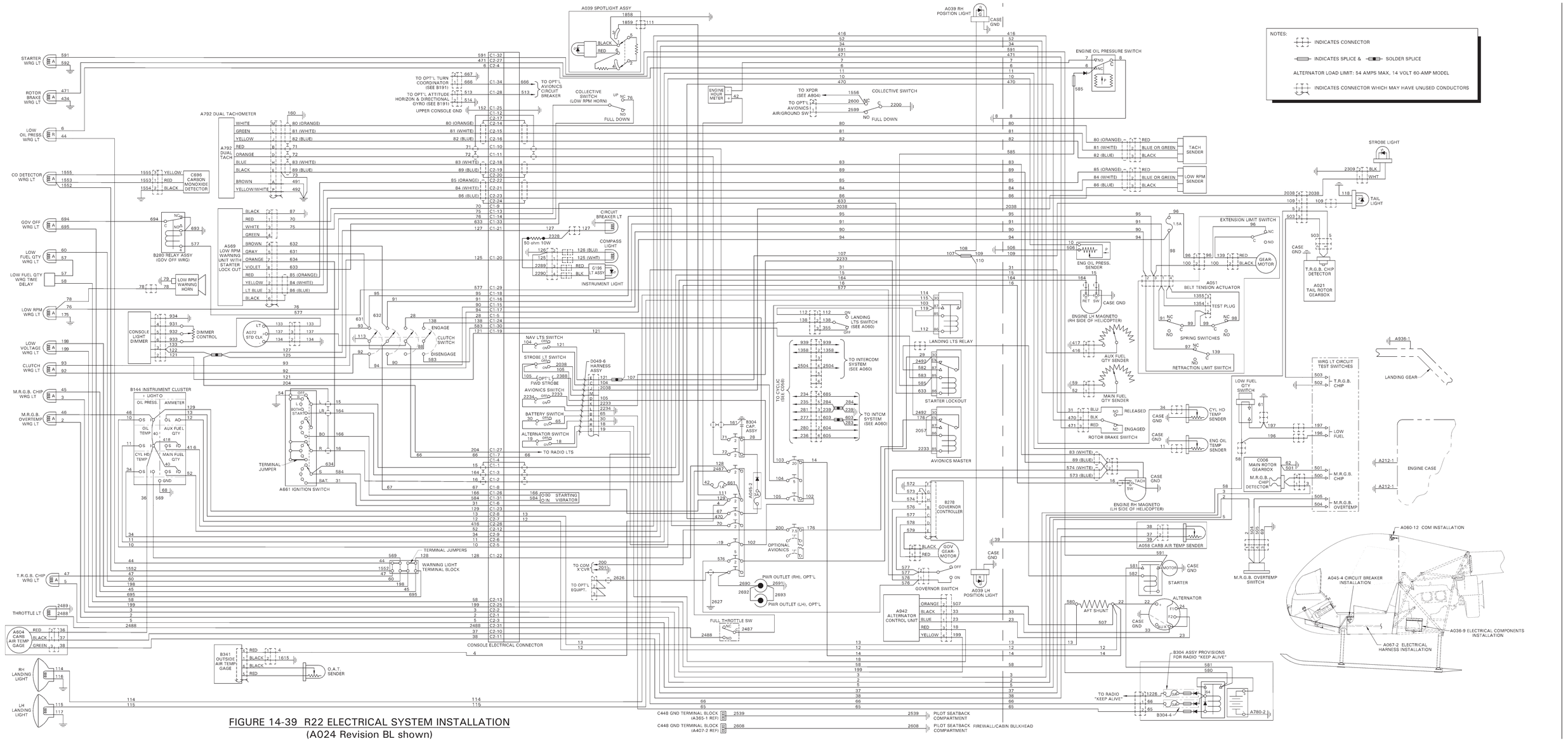

FIGURE 14-39 R22 ELECTRICAL SYSTEM INSTALLATION
(A024 Revision BL shown)

Intentionally Blank

14.1200 Avionics for R22 Helicopter S/N 4591, 4650, 4651, 4656 & Subsequent

14.1210 A024-9 Electrical System Installation

A. Description of New Features

1. Main Switch Panel

   The main switch panel is located at the top of the avionics stack. Rocker-style switches are utilized for ergonomic comfort for this new location, and for the new console geometry (earlier R22s utilized paddle-style switches). The clutch actuator and ignition switches have been relocated to the upper console, away from the main switch panel vicinity. These switches are used less frequently during flight, and it is beneficial to locate them near the engine instruments. Some secondary instruments such as OAT and clock are also relocated.

2. Avionics Switch

   An avionics switch is located on the main switch panel near the battery and alternator switches. A dedicated on-off switch can be desirable for a variety of operations, and some manufacturer's recommend their equipment be installed with an avionics switch (earlier R22s have an avionics bus, but the master radio relay interrupted power to the avionics bus during start-up, which eliminated the need for a switch). The avionics switch controls a relay which interrupts power to the avionics bus (system is fail-safe ON).

B. Schematic

Refer to Figure 14-39 for A024-9 electrical system schematic.

14.1220 A036-9 Electrical Components Installation

A. Description of New Features

1. Interior Lighting

   A fixed overhead LED-lamp at the top of the windshield illuminates the instrument panel (earlier R22s used individual post lights to illuminate instruments). Panel lighting is activated by the NAV lights switch and brightness is adjusted by a dimmer knob on the console.

   a. LED-lamp replacement

      i. Remove hardware securing G196-6 light assembly to windshield stiffener. Remove two cap screws securing cover and LED-lamp assembly to housing. Disconnect lamp wires from airframe harness and remove lamp.

      ii. Connect A238-2289 (white) airframe harness wire to LED-lamp assembly red wire, and A238-2290 airframe harness wire to lamp black wire. Install cover (chamfer facing away from housing) and install two cap screws. Install hardware securing G196-6 light assembly to windshield stiffener. Verify security.

      iii. Turn battery switch and NAV lights switch on and verify proper operation with dimmer knob. Turn battery switch and NAV lights switch off.

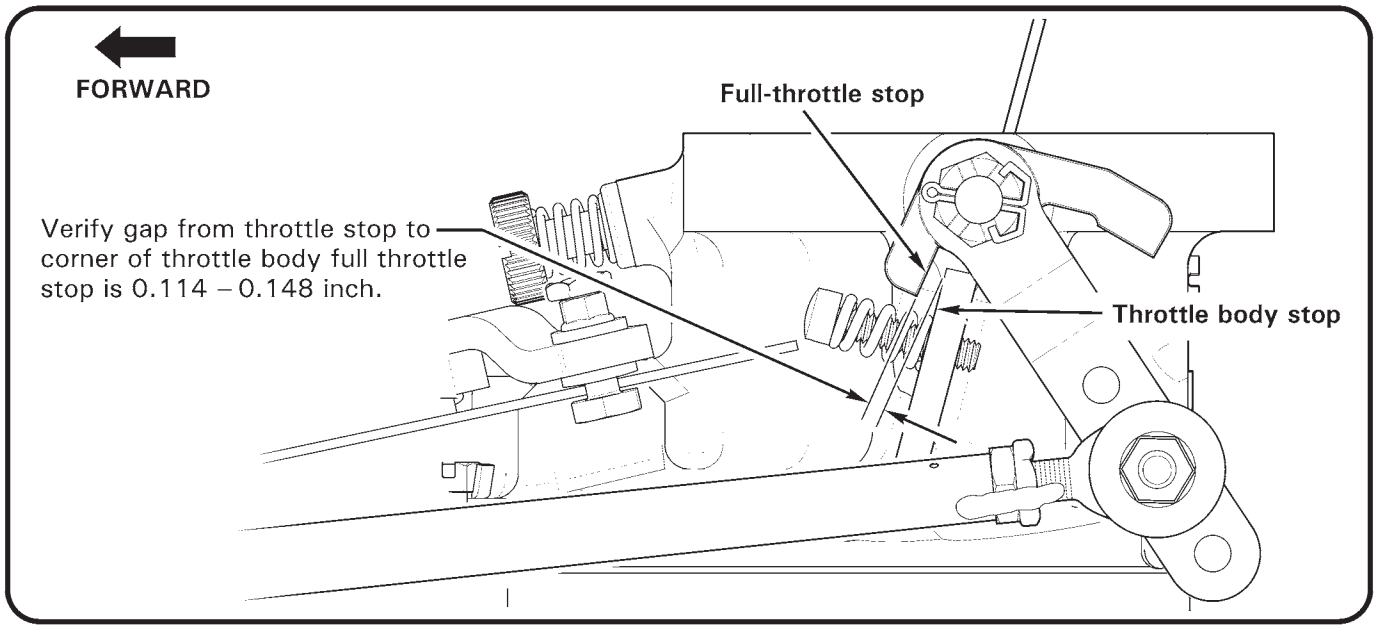

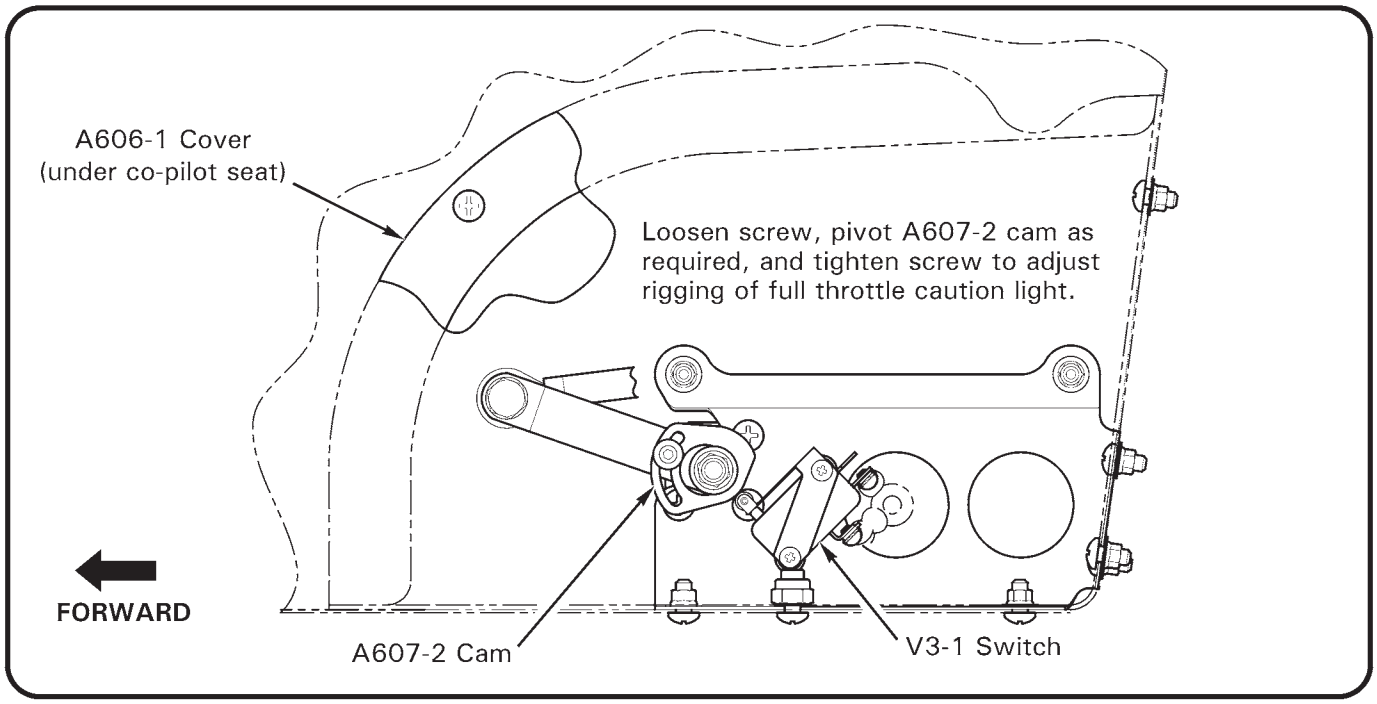

FIGURE 14-40 FULL THROTTLE CAUTION LIGHT RIGGING CHECK

14.1220 A036-9 Electrical Components Installation (continued)

A. Description of New Features (continued)

2. Full Throttle Caution (Amber) Light

The full throttle light is located near the manifold pressure gage and indicates near full throttle operation. At full throttle operation, the pilot must control RPM with the collective to avoid a low RPM situation (at lower throttle settings, RPM is maintained by the mechanical correlator and engine governor). The low RPM warning system indicates when RPM is below normal values, but the full throttle light can alert the pilot to reduce power demand before a low RPM situation is encountered.

a. Rigging Check

i. Turn fuel shut-off valve off.

ii. Turn battery switch on. Raise collective full up and slowly rotate twist grip open until full throttle caution light just illuminates.

iii. Refer to Figure 14-40. Verify gap from throttle stop to corner of throttle body full-throttle stop is 0.114–0.148 inch. Adjust as required per step 2b.

iv. Lower collective & turn battery switch off. Turn fuel shut-off valve on.

b. Switch Adjustment

i. Refer to Figure 14-40. Raise collective full up, rotate (throttle) twist grip as required, loosen screw, and pivot A607-2 slotted cam (in throttle linkage, under co-pilot seat) so V3-1 switch activates when throttle stop is approximately 0.130 inch from corner of throttle body full-throttle stop. Tighten screw.

ii. Perform rigging check per step 2a.

B. Schematic

Refer to Figure 14-39 for A024-9 electrical system schematic.

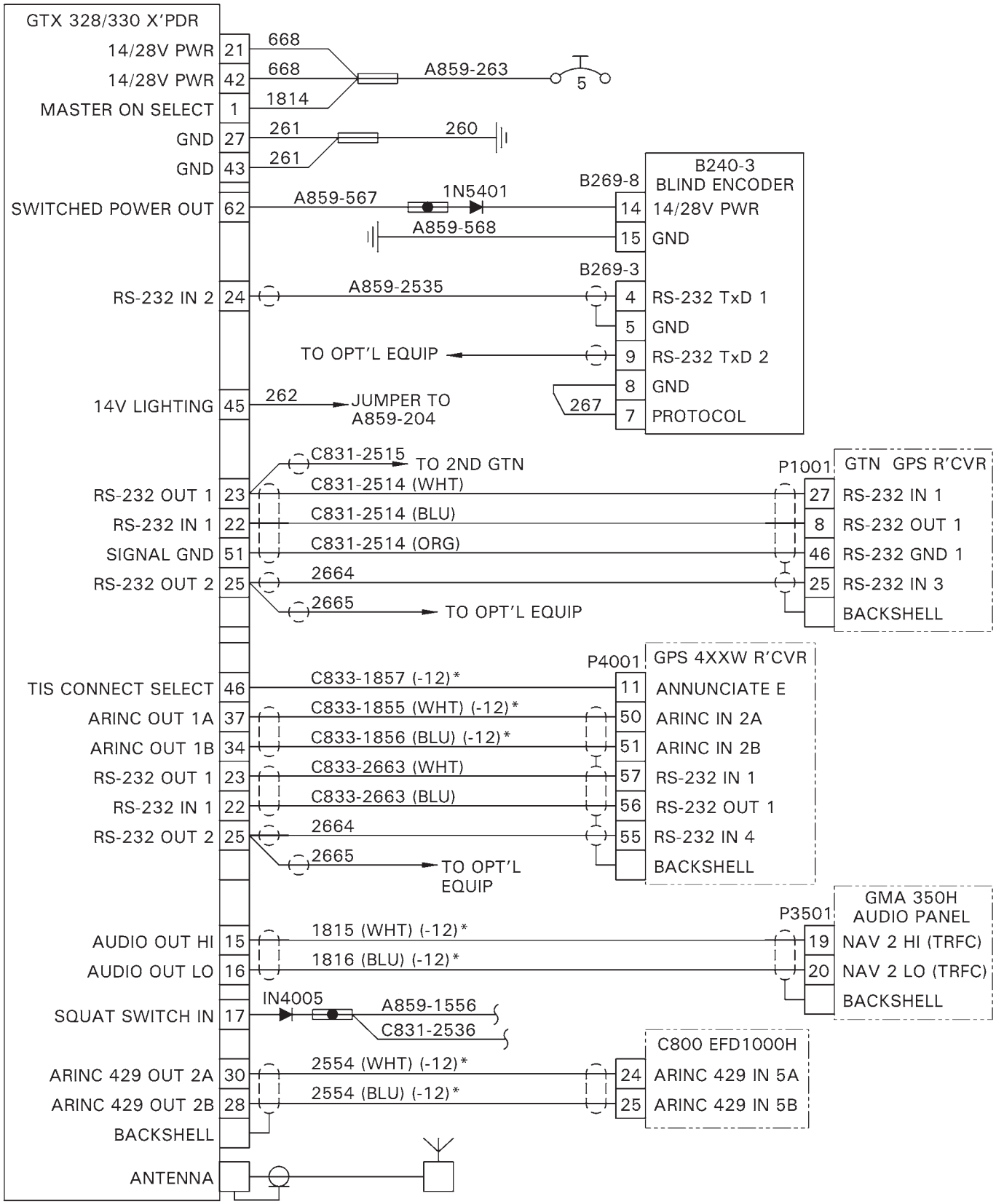

* One required on ships with Traffic Information System (TIS-A).

FIGURE 14-41 A804-12 TRANSPONDER SCHEMATIC (GARMIN GTX 330 ES)

14.1230 A804-12 Transponder (Garmin GTX 330 ES) Installation

Refer to R22 Illustrated Parts Catalog (IPC) Figure 97-1.

> NOTE
>
> Refer to Garmin GTX 330 ES Maintenance Manual and Instructions for Continued Airworthiness.

A. Description of New Features

Automatic Dependent Surveillance-Broadcast (ADS-B) "Out" equipment transmits aircraft specific-data and position information to air traffic control via GPS-based surveillance (rather than radar-based surveillance). ADS-B Out equipment will be required for R22 operation in certain airspace in the United States after January 1, 2020.

ADS-B Out system operates mostly automatically. ADS-B Out equipment is programmed with aircraft-specific data at installation. ADS-B Out system uses the primary installed GPS for position information. Additional flight-specific data is entered by the pilot using transponder controls. ADS-B data is transmitted via the transponder's Extended Squitter (ES) on frequency 1090 MHz.

ADS-B Out equipment (transponder and primary GPS) must have power and must be in normal operating modes for systems to function properly. ADS-B Out system faults are annunciated on the transponder and primary GPS screens.

Change of aircraft registration may require ADS-B equipment programming by qualified maintenance personnel.

Refer to R22 Pilot's Operating Handbook Section 9 for additional information.

B. Schematic

Refer to Figure 14-41 for A804-12 transponder & blind encoder electrical schematic.

C. Removal

1. Turn battery switch off and pull out XPDR circuit breaker (5 amp) at panel.
2. Loosen radio key securing A804-12 transponder to avionics tray.
3. Carefully unplug/remove transponder from tray.

D. Installation

1. Turn battery switch off and pull out XPDR circuit breaker (5 amp) at panel.
2. Carefully plug-in/install A804-12 transponder in appropriate location in avionics tray.
3. Tighten radio key securing transponder to tray. Verify equipment security.
4. Push in XPDR circuit breaker (5 amp) at panel. Turn battery & avionics switches on.
5. Perform appropriate functional checks per Garmin GTX 330 ES Pilot's Guide. Turn battery and avionics switches off.

14.1230 A804-12 Transponder (Garmin GTX 330 ES) Installation (continued)

E. Antenna

Refer to Section 14.700 for antenna locations and R22 Illustrated Parts Catalog (IPC) Chapter 6.

> NOTE
>
> Antenna installation depends on optional equipment installed.

Removal

1. Turn battery switch off and pull out XPDR circuit breaker (5 amp) at panel.
2. Using plastic scraper, remove B270-1 sealant from around transponder antenna at corners where it attaches to A794-2 panel.
3. Remove screws securing panel to cabin skin and disconnect antenna cable from antenna. Remove hardware securing antenna and ground wire to panel and remove antenna.

Installation

1. Turn battery switch off and pull out XPDR circuit breaker (5 amp) at panel.
2. Remove paint and primer from A794-2 panel where ground wire attaches to ensure electrical ground.
3. Install hardware securing transponder antenna and ground wire to panel. Verify security. Connect antenna cable to antenna and install screws securing panel to cabin skin. Verify security.
4. Apply small bead B270-1 sealant (0.1 inch max in height) around antenna at corners where it attaches to panel and allow to dry.
5. Perform ground checks per Part D steps 4 and 5.

F. Scheduled Maintenance and Inspections

Every 100 hour or annual inspection, determine software and database versions and update per Garmin GTX 330 ES Pilot's Guide as required.

> NOTE
>
> Garmin requires database information be updated regularly to ensure information is current.

14.1230 A804-12 Transponder (Garmin GTX 330 ES) Installation (continued)

G. Special Maintenance and Inspections

1. Turn battery and avionics switches off. Open circuit breaker panel and upper console.

2. Inspect condition of and verify no obvious damage to transponder, radio tray, copper bus bars, circuit breaker, and wiring. Verify no loose, chafed, or broken wires or terminals. Verify no evidence of arcing. Verify equipment security.

3. Secure circuit breaker panel and upper console. Perform ground checks per Part D steps 4 and 5.

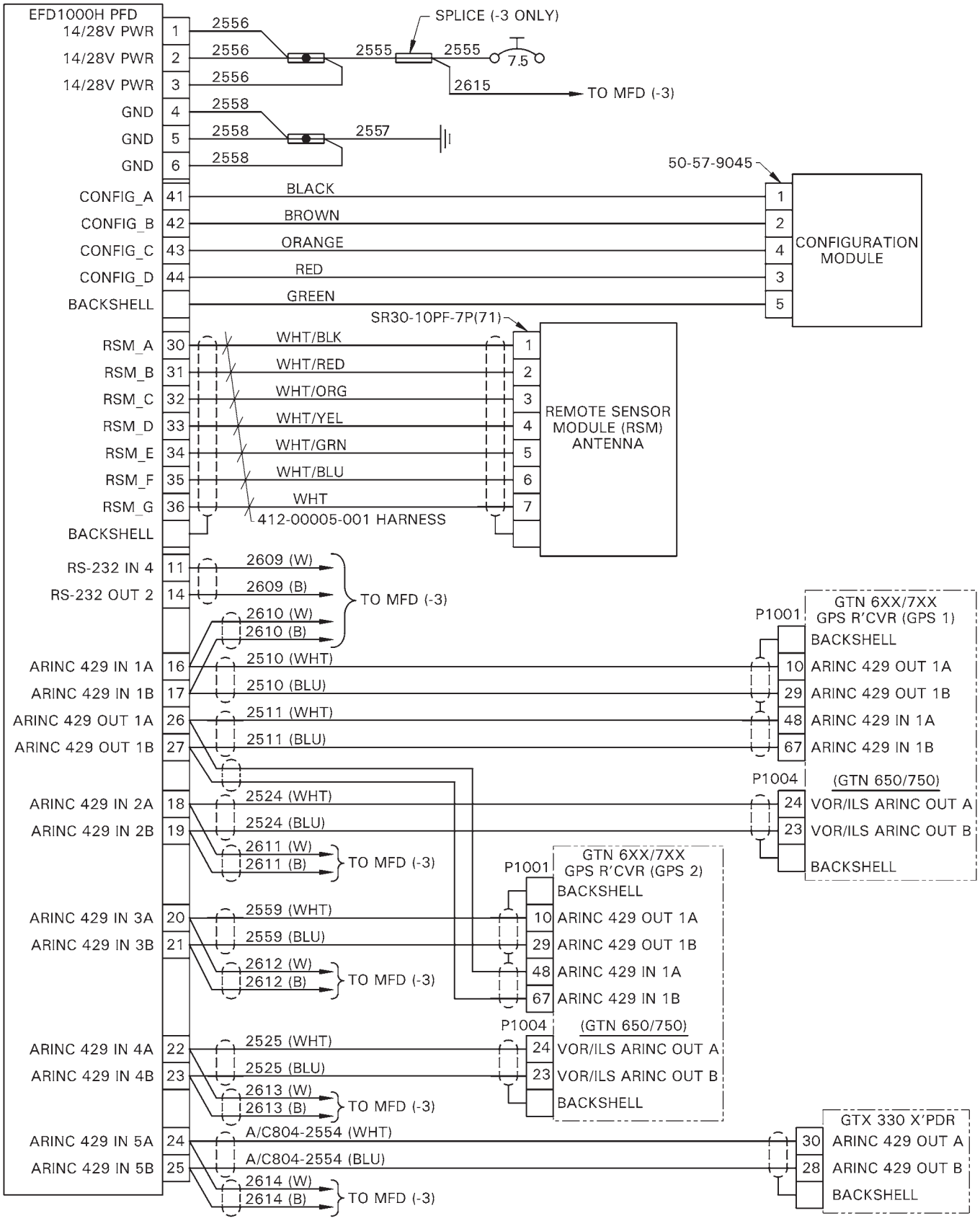

FIGURE 14-42 C800-1 ASPEN PFD ELECTRICAL SCHEMATIC

14.1240 C058-5 Cyclic Grip Assembly

Refer to R22 Illustrated Parts Catalog (IPC) Figures 67-1 and 67-7.

A. Description of New Features

The angle of the pilot's cyclic grip can be adjusted fore and aft relative to the cross tube for pilot comfort. The most forward position provides the most control clearance at aft cyclic. Pilot's should always verify full control travel prior to flight.

B. Grip Angle Adjustment

1. Loosen cap screws securing pilot's cyclic grip, block assembly, and bar to grip weldment.

2. Rotate grip about weldment to desired angle. Special torque cap screws to 40 in.-lb.

C. Removal and Installation

Refer to Sections 8.121 and 8.122 for cyclic grip assembly removal and installation procedures.

D. Schematic

Refer to Figure 14-39 for A024-9 electrical system schematic.

14.1250 C800-1 Aspen PFD Installation

Refer to Section 13.510 for description of Aspen PFD Installation.

A. Schematic

Refer to Figure 14-42 for C800-1 Aspen PFD Installation electrical schematic.

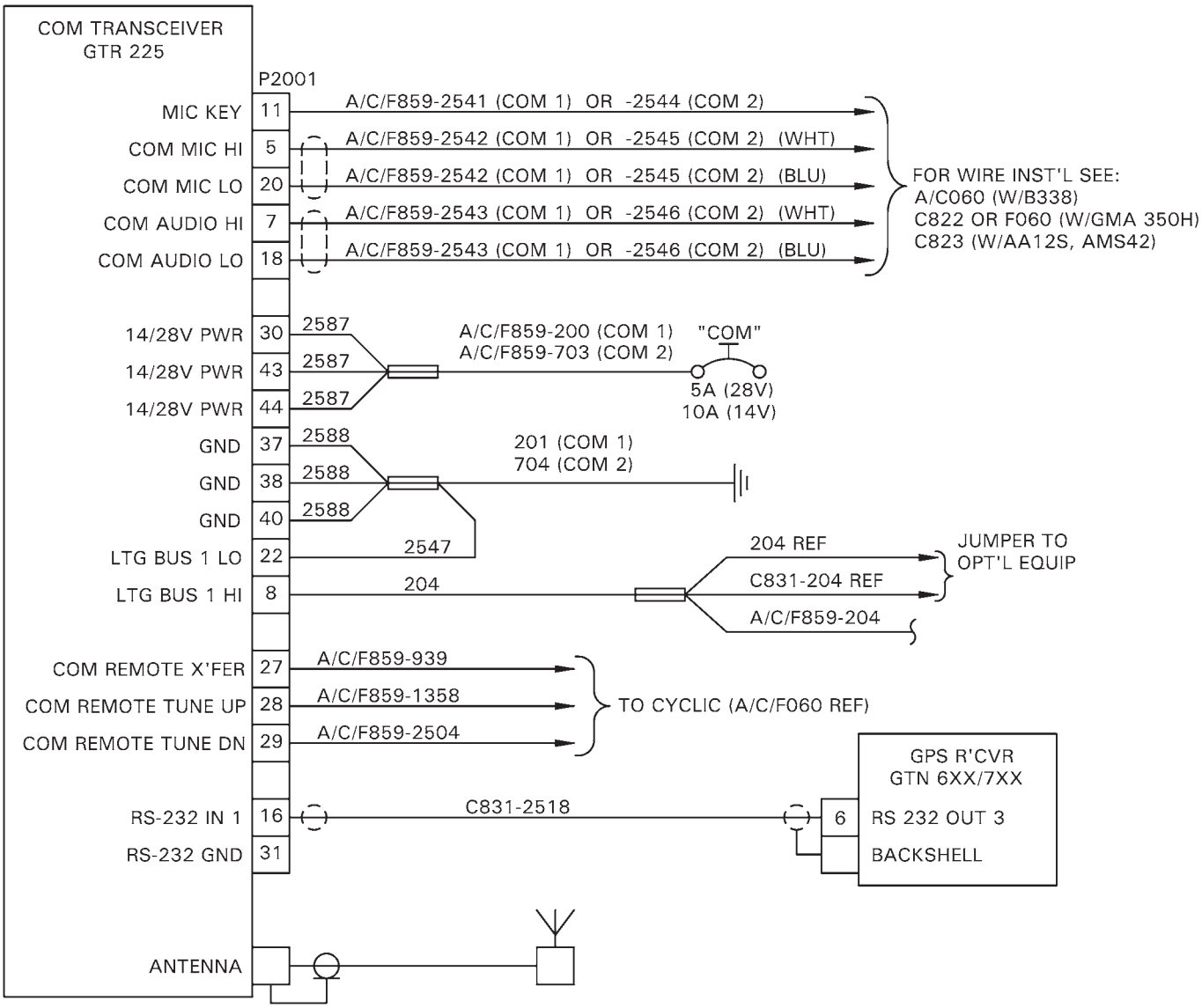

FIGURE 14-43 C802-2 COM RADIO SCHEMATIC (GARMIN GTR 225B)

14.1260 C802-2 COM Radio (Garmin GTR 225B) Installation

Refer to R22 Illustrated Parts Catalog (IPC) Figure 97-1.

A. Description of New Features

The new C802-2 COM radio (Garmin GTR 225B) includes similar communication features available in the earlier R22 COM radio (King KY197A), but also includes an airport frequency database, ability to monitor the standby frequency, and improved user memory channel functionality. The new COM radio is a dual voltage unit, suitable for use in 14V and 28V systems.

B. Schematic

Refer to Figure 14-43 for C802-2 COM Radio Installation electrical schematic.

C. Removal

1. Turn battery switch off and pull-out COM radio circuit breaker (10 amp) at panel.
2. Loosen radio key securing C802-2 COM radio to avionics tray.
3. Carefully unplug/remove radio from tray.

D. Installation

1. Turn battery switch off and pull-out COM radio circuit breaker (10 amp) at panel.
2. Carefully plug-in/install C802-2 COM radio in appropriate location in avionics tray.
3. Tighten radio key securing radio to tray. Verify equipment security.
4. Push-in COM radio circuit breaker (10 amp) at panel. Turn battery and avionics switches on.
5. Perform appropriate functional checks per Garmin GTR 225B Pilot's Guide. Turn battery and avionics switches off.

E. Antenna

Refer to Section 14.700 for antenna locations and R22 Illustrated Parts Catalog (IPC) Chapter 6.

> NOTE
>
> Antenna installation depends on number of COM installations and additional equipment installed.

14.1260 C802-2 COM Radio (Garmin GTR 225B) Installation (continued)

E. Antenna (continued)

Removal

1. Turn battery switch off and pull out COM radio circuit breaker (10 amp) at panel.
2. Using plastic scraper, remove B270-1 sealant from around COM antenna at corners where it attaches to tailcone.
3. Disconnect antenna cable from antenna. As required, remove B270-13 sealant from fastener holes. Remove screws securing antenna to tailcone and remove antenna.

Installation

1. Turn battery switch off and pull out COM radio circuit breaker (10 amp) at panel.
2. Remove paint and primer from antenna mating surfaces to ensure electrical ground.
3. As required, apply light coat B270-13 sealant to screw threads and install screws securing antenna to tailcone. As required, seal around screw heads and fill fastener holes using B270-13 sealant and allow to dry. Verify security.
4. Apply small bead B270-1 sealant (0.1 inch max in height) around antenna at corners where it attaches to tailcone and allow to dry.
5. Connect antenna cable to antenna. Verify security.
6. Perform ground checks per Part D steps 4 and 5.

F. Scheduled Maintenance and Inspections

Every 100 hour or annual inspection, determine software and database versions and update per Garmin GTR 225B Pilot's Guide as required.

NOTE

Garmin requires database information be updated regularly to ensure information is current.

G. Special Maintenance and Inspections

1. Turn battery and avionics switches off. Open circuit breaker panel and upper console.
2. Inspect condition of and verify no obvious damage to COM radio, radio tray, copper bus bars, circuit breaker, and wiring. Verify no loose, chafed, or broken wires or terminals. Verify no evidence of arcing. Verify equipment security.
3. Secure circuit breaker panel and upper console. Perform ground checks per Part D steps 4 and 5.

Intentionally Blank

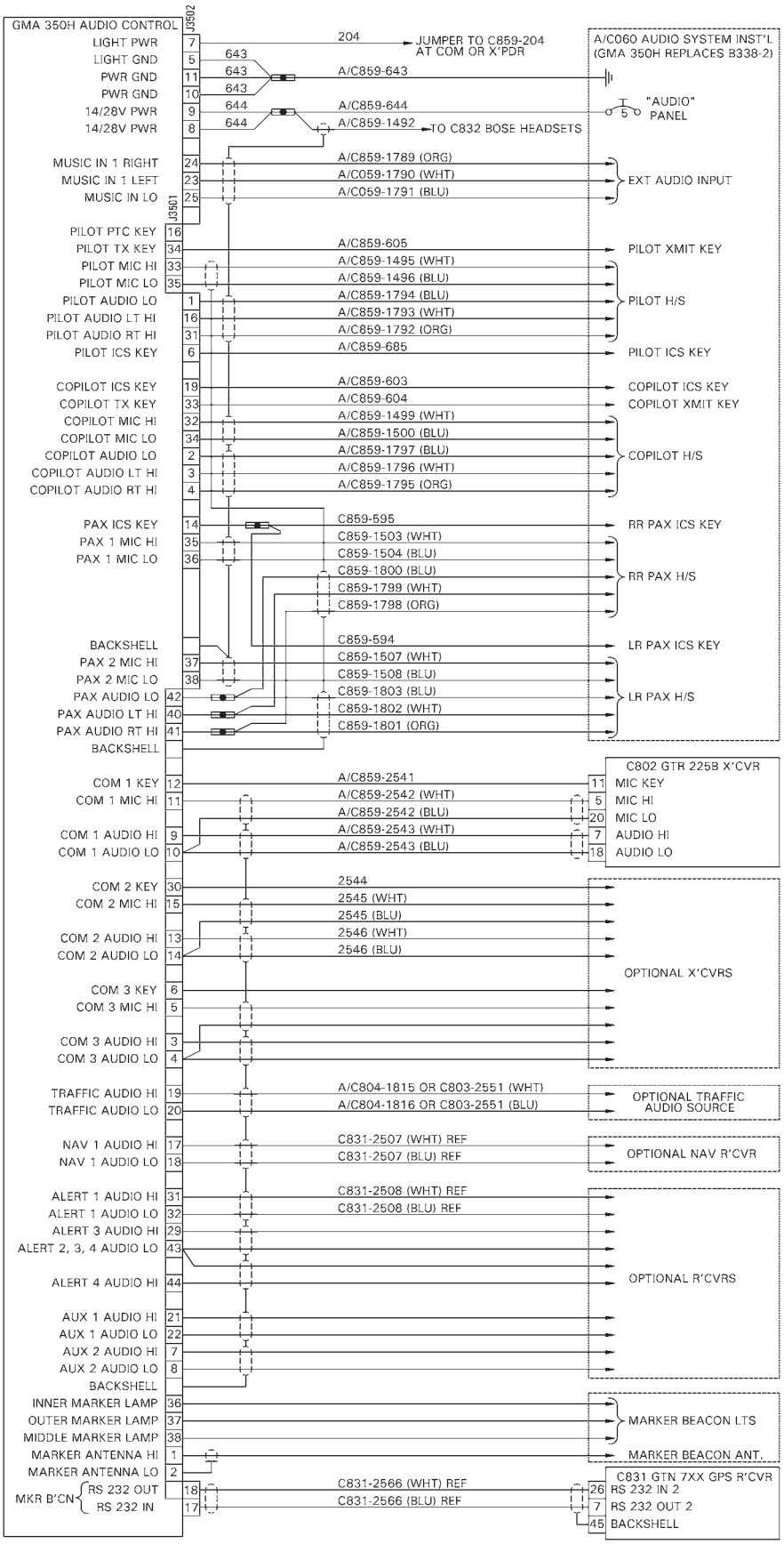

FIGURE 14-44 C822-1 AUDIO CONTROL SCHEMATIC (GARMIN GMA 350H)

14.1270 C822-1 Audio Control (Garmin GMA 350H) Installation

Refer to R22 Illustrated Parts Catalog (IPC) Figure 97-1.

> NOTE
>
> Refer to Garmin GMA 350H series Maintenance Manual and Instructions for Continued Airworthiness.

A. Description of New Features

The Garmin GMA 350H new audio control includes improved squelch and background noise suppression, 3D audio (if stereo headsets are used) which allows inputs from separate radios to sound as if they are coming from separate locations around the listener, and some control functions via voice command when a momentary push-button switch is depressed on the pilot's cyclic grip.

B. Schematic

Refer to Figure 14-44 for C822-1 Audio Control Installation electrical schematic.

C. Removal

1. Turn battery switch off and pull out AUDIO PANEL circuit breaker (5 amp) at panel.
2. Loosen radio key securing Garmin GMA 350H audio control to avionics tray.
3. Carefully unplug/remove audio control from tray.

D. Installation

1. Turn battery switch off and pull out AUDIO PANEL circuit breaker (5 amp) at panel.
2. Carefully plug-in/install Garmin GMA 350H audio control in appropriate location in avionics tray.
3. Tighten radio key securing audio control to tray. Verify equipment security.
4. Push in AUDIO PANEL circuit breaker (5 amp) at panel. Turn battery & avionics switches on.
5. Perform appropriate functional checks per Garmin GMA 350H series Pilot's Guide. Turn battery & avionics switches off.

14.1270 C822-1 Audio Control (Garmin GMA 350H) Installation (continued)

E. Antenna

Refer to Section 14.700 for marker beacon antenna location and R22 Illustrated Parts Catalog (IPC) Chapter 6.

Removal

1. Turn battery switch off and pull out AUDIO PANEL circuit breaker (5 amp) at panel.
2. Using plastic scraper, remove B270-1 sealant from around CI 102 marker beacon antenna at corners where it attaches to A794-2 panel.
3. Remove hardware securing panel to belly and disconnect A850-210 antenna cable from antenna. Carefully remove screws (they are installed with threadlocker) securing antenna to panel and remove antenna.

Installation

1. Turn battery switch off and pull out AUDIO PANEL circuit breaker (5 amp) at panel.
2. Remove paint and primer from antenna mating surfaces to ensure electrical ground.
3. Apply light coat B270-11 adhesive to new screw threads and install screws securing CI 102 marker beacon antenna to A794-2 panel. Verify security.
4. Connect A850-210 antenna cable to antenna. Install screws securing forward belly panel to belly. Verify security.
5. Apply small bead B270-1 sealant (0.1 inch max in height) around antenna at corners where it attaches to belly panel and allow to dry.
6. Perform ground checks per Part D steps 4 and 5.

F. Scheduled Maintenance and Inspections

On condition.

G. Special Maintenance and Inspections

1. Turn battery and avionics switches off. Open circuit breaker panel and upper console.
2. Inspect condition of and verify no obvious damage to audio control, radio tray, copper bus bars, circuit breaker, and wiring. Verify no loose, chafed, or broken wires or terminals. Verify no evidence of arcing. Verify equipment security.
3. Secure circuit breaker panel and upper console. Perform ground checks per Part D steps 4 and 5.

Intentionally Blank

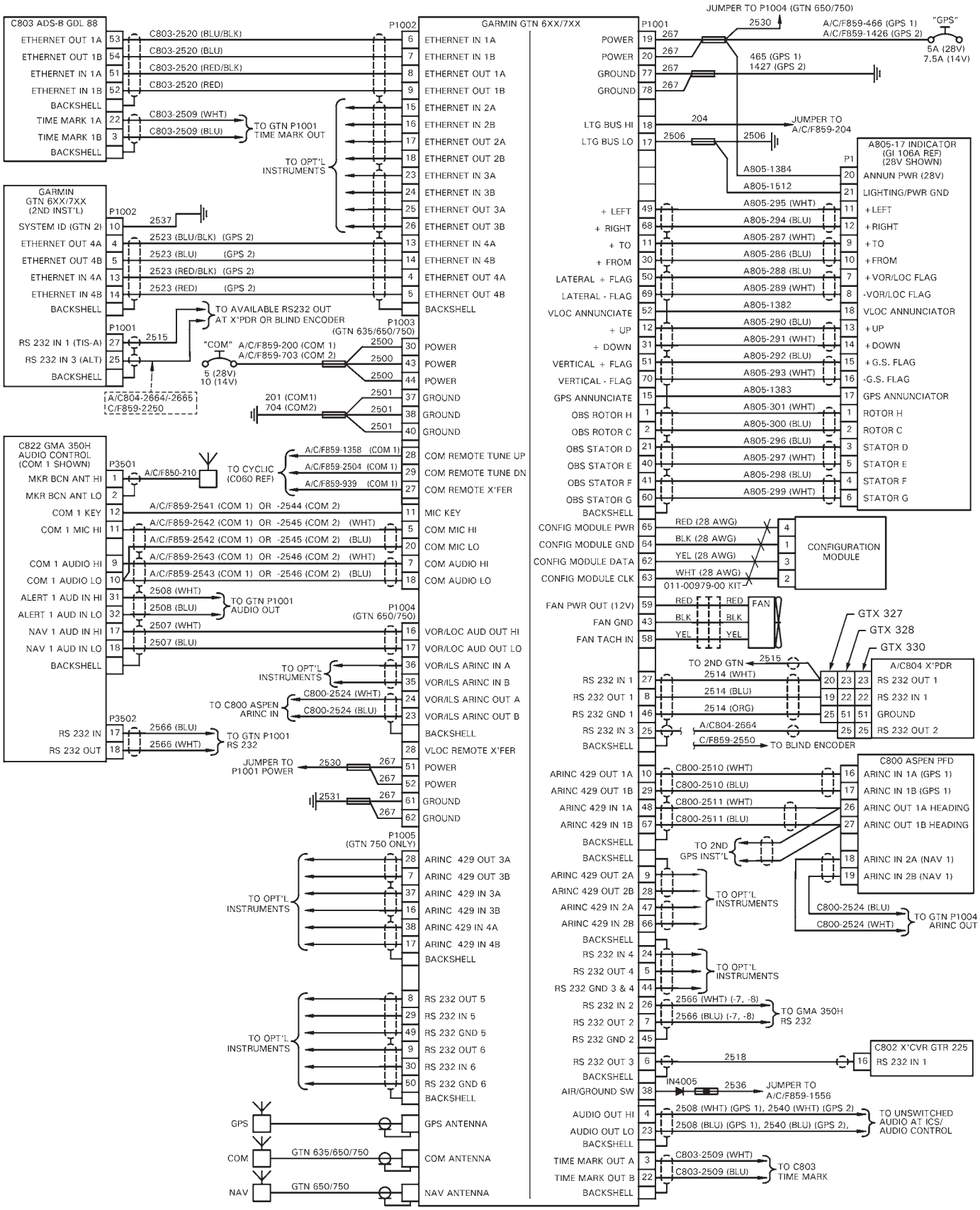

FIGURE 14-45 C831 GPS SCHEMATIC (GARMIN GTN 600 SERIES)

14.1280 C831 GPS (Garmin GTN 600 series) Installation

Refer to R22 Illustrated Parts Catalog (IPC) Figure 97-5.

> NOTE
>
> Refer to Garmin GTN 600 series Maintenance Manual and Instructions for Continued Airworthiness.

A. Description of New Features

The new C831 GPS (Garmin GTN 600 series) includes similar navigation features available in the earlier R22 GPS (Garmin GNS 400 series), but the interface offers a combination of touch screen technology with traditional buttons and knobs.

One GTN 600 series GPS may be installed in the pilot-side console location only.

Note: R22 ADS-B Out system requires Garmin GTN 600-series GPS. Refer to Section 14.1230.

B. Schematic

Refer to Figure 14-45 for C831 GPS (Garmin GTN 600 series) installation electrical schematic.

C. Removal

1. Turn battery switch off and pull out COM circuit breakers(s) (10 amp) and GPS circuit breaker(s) (7.5 amp) as required at panel.
2. Loosen radio key securing C831 GPS to tray in pilot's side console.
3. Carefully unplug/remove GPS from tray.

D. Installation

1. Turn battery switch off and pull out COM circuit breakers(s) (10 amp) and GPS circuit breaker(s) (7.5 amp) as required at panel.
2. Carefully plug-in/install C831 GPS in tray in pilot's side console.
3. Tighten radio key securing GPS to tray. Verify equipment security.
4. Push in COM circuit breaker(s) (10 amp) and GPS circuit breaker(s) (7.5 amp) as required at panel. Turn battery and avionics switches on.
5. Perform appropriate functional checks per Garmin GTN 600 series Pilot's Guide. Turn battery and avionics switches off.

14.1280 C831 GPS (Garmin GTN 600 series) Installation (continued)

E. Antenna

Refer to Section 14.700 for antenna locations and R22 Illustrated Parts Catalog (IPC) Chapter 6.

> NOTE
>
> Antenna installation depends on number COM installations and additional equipment installed.

Removal

1. Turn battery switch off and pull out COM circuit breaker(s) (10 amp) and GPS circuit breaker(s) (7.5 amp) as required at panel.

2. Using plastic scraper, remove B270-1 sealant from around GPS antenna at corners where it attaches to tailcone.

3. Disconnect antenna cable from antenna. As required, remove B270-13 sealant from fastener holes. Remove screws securing antenna to tailcone and remove antenna.

Installation

1. Turn battery switch off and pull out COM circuit breaker(s) (10 amp) and GPS circuit breaker(s) (7.5 amp) as required at panel.

2. Remove paint and primer from antenna mating surfaces to ensure electrical ground.

3. As required, apply light coat B270-13 sealant to screw threads and install screws securing antenna to tailcone. As required, seal around screw heads and fill fastener holes using B270-13 sealant and allow to dry. Verify security.

4. Apply small bead B270-1 sealant (0.1 inch max in height) around antenna at corners where it attaches to tailcone and allow to dry.

5. Connect antenna cable to antenna. Verify security.

6. Perform ground checks per Part D steps 4 and 5.

F. Scheduled Maintenance and Inspections

Every 100 hour or annual inspection, determine software and database versions and update per Garmin GTN 600 series Pilot's Guide as required.

> NOTE
>
> Garmin requires database information be updated regularly to ensure information is current.

14.1280 C831 GPS (Garmin GTN 600 series) Installation (continued)

G. Special Maintenance and Inspections

1. Turn battery and avionics switches off. Open circuit breaker panel. Remove hardware securing pilot's side console shell assembly to tray and carefully pivot shell assembly upward (GPS and faceplate may be also be removed).

2. Inspect condition of and verify no obvious damage to GPS, tray, copper bus bars, circuit breaker, and wiring. Verify no loose, chafed, or broken wires or terminals. Verify no evidence of arcing. Verify equipment security.

3. Secure circuit breaker panel and pilot's side console. Perform ground checks per Part D steps 4 and 5.

Intentionally Blank

CHAPTER 15

FURNISHINGS

Section	Title	Page
15.000	Furnishings	15.1
15.001	Introduction	15.1
15.002	Description	15.1
15.100	Seat Belt	15.1
15.110	Seat Belt Removal	15.1
15.120	Seat Belt Installation	15.1
15.200	Seat Assembly	15.3
15.210	Seat Bottom Assembly Removal and Installation	15.3
15.220	Seat Back Assembly Removal and Installation	15.3
15.300	Carpet	15.4
15.310	Carpet Removal	15.4
15.320	Carpet Installation	15.5
15.400	Foam Installation	15.5
15.410	Foam Removal	15.5
15.420	Foam Installation	15.5
15.500	Map Holder Pocket	15.6
15.510	Map Holder Removal	15.6
15.520	Map Holder Installation	15.6
15.600	Fire Extinguisher	15.6
15.610	Fire Extinguisher Holder Removal	15.6
15.620	Fire Extinguisher Holder Installation	15.7
15.700	License Holder	15.7
15.710	License Holder Removal	15.7
15.720	License Holder Installation	15.7
15.800	Operator’s Manual Strap	15.8
15.810	Strap Removal	15.8
15.820	Strap Installation	15.8

Intentionally Blank

CHAPTER 15

FURNISHINGS

15.000 Furnishings

15.001 Introduction

This section contains the procedures necessary for removal, installation, replacement and maintenance of interior furnishings.

15.002 Description

A baggage space is located under each seat and the seat bottom hinges up and forward for access. Each seat is equipped with a combined seat belt and inertia reel shoulder strap.

15.100 Seat Belt

15.110 Seat Belt Removal

a) The inertia reel is held by four screws thru the vertical 'V' bulkhead into a plate and nut (rt. side); on the left permanently attached nutplates are used. Remove the screws, retaining any loose hardware for later re-installation.

b) Remove the bolt holding each end of the lap portion of the seat belt. Retain the bolt, spacers, washer and nut for later re-installation.

15.120 Seat Belt Installation

a) On the older-style shoulder straps, position the shoulder strap to extend from the inertia reel at the approximate front of the reel.

> NOTE
>
> The two mounting rings of the inertia reel can be rotated and repositioned to give proper shoulder strap position.

Viewed from above, the reel on the left side should rotate in a clockwise direction and the reel on the right side should rotate in a counter-clockwise direction. On the newer-style shoulder strap assemblies, the inertia reel is mounted below a swivel ring to give proper shoulder strap position. The two styles of shoulder strap assemblies are not interchangeable.

Intentionally Blank

15.120 Seat Belt Installation (cont'd)

b) The angular latch is positioned facing up or forward. The belt end fitting is then installed using the required spacer with a washer on each side of the spacer. The bolt head to be inboard, nut torque will be 70 in.-lb plus locking torque.

c) The belt buckle assembly is installed on the inboard side of the anchor attaching lug using the required spacer with a washer on each side, the bolt head to be pointing inboard, the nut torque will be 70 in.-lb plus locking torque.

CAUTION

No sharp edges or burrs should be found in the round knurled locking bar or the latching plate.

15.200 SEAT ASSEMBLY

15.210 Seat Bottom Assembly Removal and Installation

To remove the seat bottom:

a) Remove the six attaching nuts and screws at the hinge.

b) Remove the seat bottom from the helicopter.

To install the seat bottom, set seat in place and position the hinge. Install and tighten the attaching screws.

NOTE

Prior to ship S/N 0100, the seat hinge and aircraft were match drilled.

15.220 Seat Back Assembly Removal and Installation

To remove the seat back:

a) Remove the AN535-832 screws around the perimeter of the seat back.

NOTE

The fuel valve handle must be disconnected when removing the left seat back. See Section 12.000 for handle reinstallation.

b) Remove the seat back.

15.220 Seat Back Assembly Removal and Installation (cont'd)

To install the seat back:

a) Install the right seat back using AN525-832 attaching screws. Install the center vertical inspection panel using AN525-832 attaching screws.

b) Install the left seat back and left collective boot using AN525-832 attaching screws. Install fuel valve handle and retainer plates, ensuring proper handle position. Install the center vertical inspection panel last.

Should the seat back cushion need to be replaced, a new back can be installed onto the seat back panel.

a) Remove the seat back from the helicopter.

b) Carefully, drill out the eight rivets holding the cushion to the seat back panel, so as not to elongate or enlarge the hole.

c) Position the replacement cushion at 1.00 ±.10 inch above the top edge of the seat back panel. Using the existing #30 holes in the seat back panel, mark and drill the eight holes in the cushion to match the seat back panel.

d) Using AVDEL rivets (1601-0410 rivet, 8 each panel) install the cushion to the panel.

e) Reinstall seat back assembly.

15.300 CARPET

15.310 Carpet Removal

CAUTION

Carpet is installed using adhesive. Caution must be used in removing carpet if it is to be reinstalled.

a) Remove the four (4) screws, washers and nut holding the carpet pieces nearest each door.

b) Slowly pull carpet back from corners and scrape under the carpet at the edge that is glued to the underlying structure.

15.320 Carpet Installation

NOTE

Use 3M #44 Spray Adhesive, Pliobond or Stabond T440 to secure the carpet to the underlying structure.

a) Check carpet for proper fit, trim if required.

b) Apply the adhesive onto the structure and the bottom side of the foam and carefully install so as not to leave excess adhesive on adjoining areas.

c) Ensure smooth wrinkle-free surface immediately upon installation before the adhesive sets.

d) Secure the two carpet pieces nearest each door with the screws, washers and nuts using the existing holes in the structure drilled for that purpose.

15.400 FOAM INSTALLATION

15.410 Foam Removal

NOTE

Foam is installed using adhesive. Removal of foam for later reuse is not recommended. Do not damage underlying structure in removal operation.

a) Peel the largest portions of the foam off by hand.

b) Carefully remove remaining foam pieces with a putty knife.

15.420 Foam Installation

NOTE

Use 3M #44 Spray Adhesive, Pliobond or Stabond T440 to secure the foam to the underlying structure.

a) Check foam for proper fit, trim if required.

15.420 Foam Installation (cont'd)

b) Apply the adhesive onto the structure and the bottom side of the foam and carefully install so as not to leave excess adhesive on adjoining areas.

c) Ensure smooth wrinkle-free surface immediately upon installation before the adhesive sets.

15.500 MAP HOLDER POCKET

15.510 Map Holder Removal

a) Carefully drill out the five rivets, holding the map holder to the front of the right seat, so as not to elongate or enlarge the hole.

b) Remove the map holder and the two retaining strips.

15.520 Map Holder Installation

a) If holes were not previously drilled, use a #30 drill and match drill three holes for the long strip 1 inch from the right edge and two holes for the small strip 12.8 inches from the right edge. (Both strips to be positioned vertically with the edge near the bottom of the front seat.)

b) Fold the edge of the map holder material around the long strip and position at its matching holes in seat front. Using three AVDEL rivets (1601-0410), install with the rivet head on the inside of the baggage compartment and placing a AN960-6 washer onto the rivet next to the material on the outside, rivet in place.

c) Pull the material taut, fold the material around the small strip and position over its matching holes. Cut off excess material at this time.

Using two AVDEL rivets, following the procedure above, rivet the smaller strip and material in place.

15.600 FIRE EXTINGUISHER

15.610 Fire Extinguisher Holder Removal

CAUTION

The fire extinguisher holder is sewn into the carpet. Caution must be used in removing carpet if it is to be re-installed.

15.610 Fire Extinguisher Holder Removal (cont'd)

a) Drill out the four rivets holding the Operator's Manual strap. Do not elongate or enlarge the holes.

b) Remove the two screws, washers and nuts holding the carpet at the door entrance.

c) Remove the screws holding the trim strip at the cur-cuit breaker panel.

d) Remove the carpet per the carpet removal procedure. (See Section 15.310).

15.620 Fire Extinguisher Holder Installation

a) Install the carpet with the holder following the carpet installation procedure (See Section 15.320.)

b) Install the two hold-down screws, washers and nuts at the door entrance.

c) Locate the Operator's Manual strap and install this strap per Section 15.820.

d) Install the screws holding the trim strip at the cir-cuit breaker panel.

15.700 LICENSE HOLDER

15.710 License Holder Removal

NOTE

Early helicopters used screws at three points instead of rivets and a velcro strip and was also po-sitioned on the front of the right seat.

Remove the three attaching screws or drill out the two rivets holding the bottom of license holder, do not elongate or enlarge holes.

15.720 License Holder Installation

a) If an early serial number aircraft, nuts and screws can be used to reinstall holder or it can be converted over to the rivets and velcro strip.

15.720 License Holder Installation (cont'd)

b) Position the license holder on the front of the left seat. Drill the two #30 (.128) holes, if necessary, and install the two AVDEL 1602-0410 rivets through the holder with the rivet head inside the baggage compartment and a AN960-6 washer on the rivet, next to the holder.

c) Install the velcro strip with the adhesive to hold the top of the license holder to the front of the left seat.

NOTE

Use 3M #44 Spray Adhesive, Pliobond or Stabond T-440.

15.800 OPERATOR'S MANUAL STRAP

15.810 Strap Removal

Drill out the four rivets holding the strap to the structure.

CAUTION

Do not elongate or enlarge the holes.

15.820 Strap Installation

a) Position strap and install using existing holes. Top of the strap is approximately 4.5 inches from the floor panel.

b) Install the strap using four AVDEL 1601-0410 rivets.

CHAPTER 16

SPECIAL TOOLS

Section	Title	Page
16.100	Special Tools	16.1
16.200	Illustrations and Tasks	16.3

Intentionally Blank

CHAPTER 16

SPECIAL TOOLS

16.100 Special Tools

The following is a list of Robinson R22 special tools.

R22 special tools are to be used in conjunction with the applicable instructions for continued airworthiness, for their designated maintenance task.

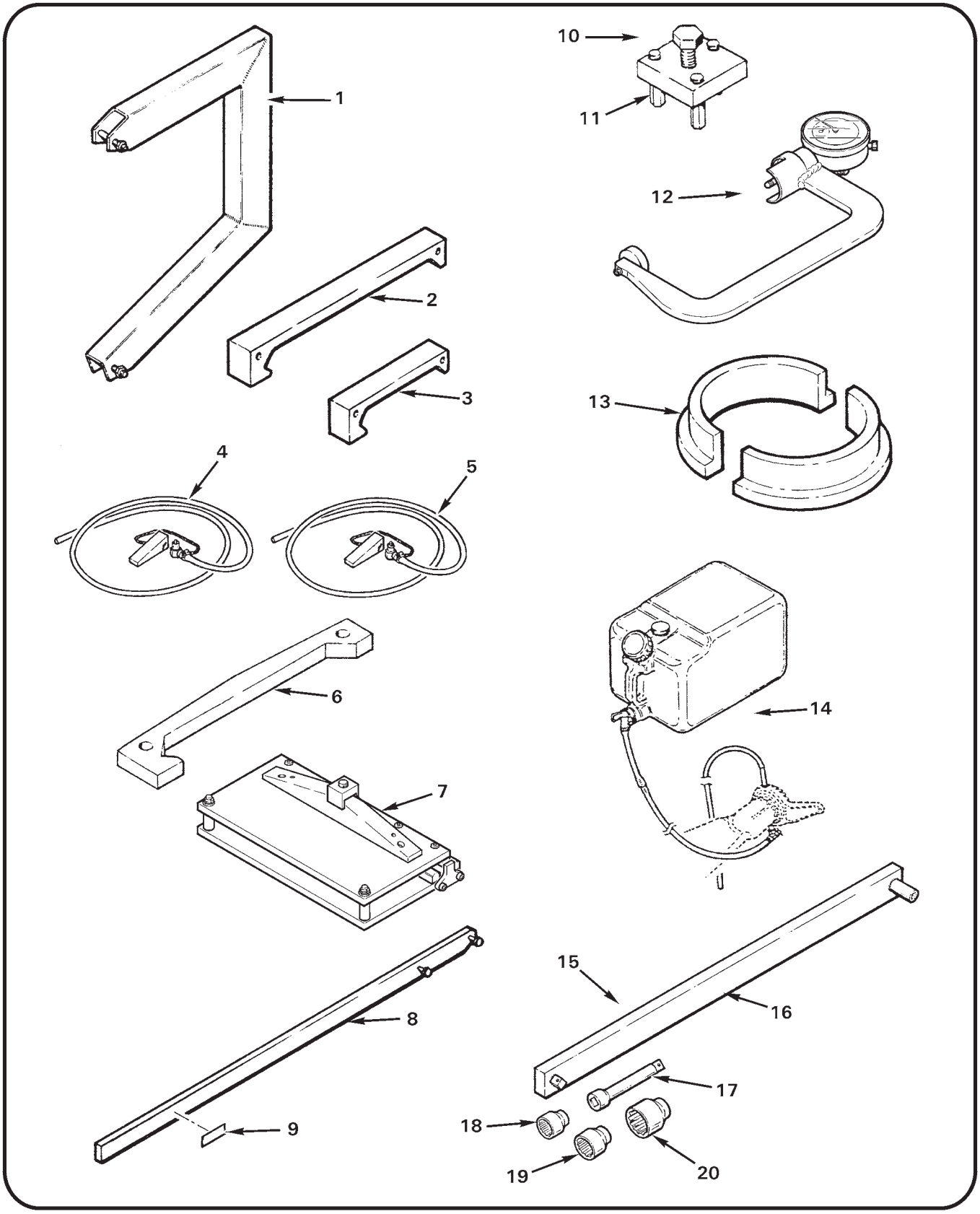

FIGURE 16-1 SPECIAL TOOLS

16.200 Illustrations and Tasks

1 MT016-1 Engine Hoist
REFER TO §§ 6.110 ENGINE REMOVAL & 6.120 ENGINE INSTALLATION

2 MT050-1 Main Rotor Rigging Fixture
REFER TO §§ 10.120 MAIN ROTOR & 10.122 COLLECTIVE TRAVEL RIGGING

3 MT050-2 Tail Rotor Rigging Fixture
REFER TO § 10.140 TAIL ROTOR RIGGING

4 MT053-1 Main Rotor Gearbox Drain Assembly – Thread-Type Chip Detector
REFER TO § 1.120 MAIN ROTOR GEARBOX DRAIN AND FLUSH

5 MT054-1 Main Rotor Gearbox Drain Assembly – Quick Disconnect Chip Detector
REFER TO § 1.120 MAIN ROTOR GEARBOX DRAIN AND FLUSH

6 MT068-1 Horizontal Stabilizer Rigging Tool
REFER TO § 4.325 HORIZONTAL STABILIZER REPLACEMENT

7 MT526-1 Main Rotor Blade Trim Tab Bender (stainless steel skin)
REFER TO § 10.233 MAIN ROTOR BLADE TRIM TAB ADJUSTMENT

MT526-8 Main Rotor Blade Trim Tab Bender (aluminum skin)
REFER TO § 10.233 MAIN ROTOR BLADE TRIM TAB ADJUSTMENT

8 MT091-1 Holder – Engine Ring Gear (Incl item 9)
VARIOUS

9 MT091-3 Decal (torquing instructions)

10 MT092-1 Fan Puller (Incl item 11)
REFER TO § 6.210 FANWHEEL REMOVAL

11 MT092-3 Spacer – Fan Puller
REFER TO § 6.210 FANWHEEL REMOVAL

12 MT122-1 Main Rotor Hub, Bolt Elongation (teeter hinges & A154-1 hub coning hinges)
REFER TO § 9.110 MAIN ROTOR BLADES

MT122-15 Main Rotor Hub, Bolt Elongation (B370-1 hub coning hinges)
REFER TO § 9.110 MAIN ROTOR BLADES

MT200-1 Dial Indicator
VARIOUS

13 MT146-1 Blocks – Swashplate Rigging (set of 2)
REFER TO § 10.112 SWASHPLATE

14 MT147-1 Bleed Tool – Main Rotor Blade Spindle
REFER TO §§ 9.115 FILLING ROOT FITTING AND 7.214 CLUTCH ASSEMBLY LUBRICANT INSPECTION AND SERVICING

15 MT173-5 Torque Wrench Extension – Tool Set (no longer available)
VARIOUS

16 MT173-6 Tube Weldment (no longer available)

17 9HT4441 Extension Bar (3/4 square drive x 8 inch)

18 MT173-7 Socket – 1-1/2-inch (3/4-inch drive, 12-point)

19 MT173-4 Socket – 1-11/16-inch (3/4-inch drive, 12-point)

20 MT173-8 Socket – 2-inch (3/4-inch drive, 12-point)

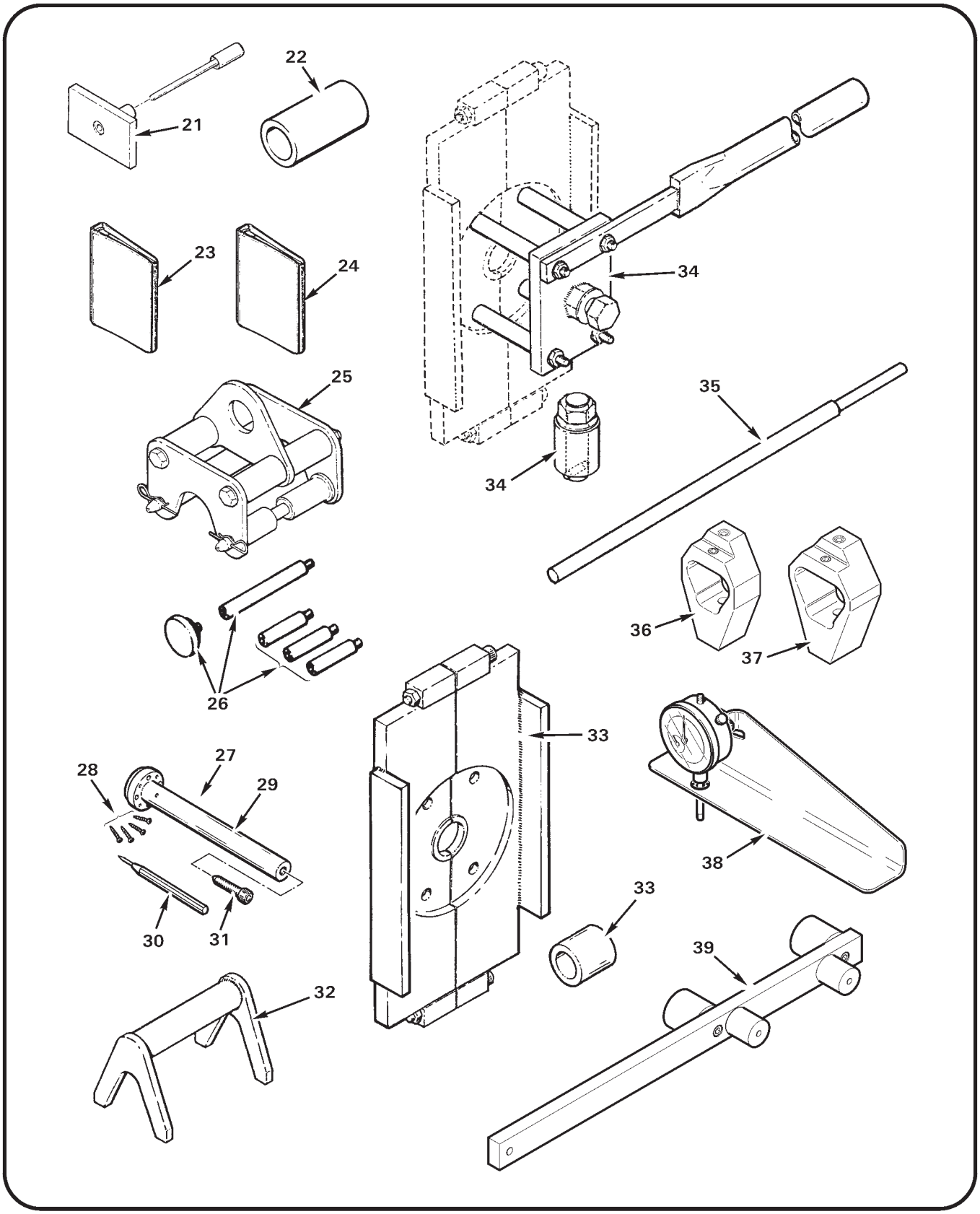

FIGURE 16-2 SPECIAL TOOLS

16.200 Illustrations and Tasks (continued)

21 MT201-1 Pressing Fixture – Tail Rotor Hub Bearing
REFER TO § 9.214 TAIL ROTOR HUB SPHERICAL BEARING REPLACEMENT

22 MT227-1 Pressing Tool – A184 Bearing
REFER TO §§ 7.211 A184 BEARING REMOVAL & 7.212 A184 BEARING INSTALLATION

23 60297-16 Engine Operator's Manual (O-320 engine)

24 60297-12 Engine Operator's Manual (O-360 engine)

25 MT234-1 Helicopter Lifting Fixture
REFER TO § 1.220 JACKING, HOISTING, AND LEVELING

26 MT260-6 Tail Rotor Drive Shaft Runout Tool
REFER TO § 7.340 CHECKING TAIL ROTOR DRIVE SHAFT RUNOUT

27 MT295-1 Tail Rotor Gearbox Output Shaft Seal Replacement Tools (Incl items 28 thru 31)
REFER TO § 7.450 A021 TAIL ROTOR GEARBOX OUTPUT SHAFT SEAL REPLACEMENT

28 92470A113 Screw (#4 X 0.75 inch)
REFER TO § 7.450 A021 TAIL ROTOR GEARBOX OUTPUT SHAFT SEAL REPLACEMENT

29 MT295-10 Mandrel
REFER TO § 7.450 A021 TAIL ROTOR GEARBOX OUTPUT SHAFT SEAL REPLACEMENT

30 MT295-3 Punch
REFER TO § 7.450 A021 TAIL ROTOR GEARBOX OUTPUT SHAFT SEAL REPLACEMENT

31 MT295-6 Screw
REFER TO § 7.450 A021 TAIL ROTOR GEARBOX OUTPUT SHAFT SEAL REPLACEMENT

32 MT294-1 Collective Spring Retainer
REFER TO §§ 8.211 COLLECTIVE STICK REMOVAL & 8.223 COLLECTIVE SPRING ADJUSTMENT FOR A038-1 THRU -4 ASSEMBLY

33 MT303-1 Clutch Bearing (A184) Removal and Installation Tools
REFER TO §§ 7.211 A184 BEARING REMOVAL & 7.212 A184 BEARING INSTALLATION

34 MT303-3 Clutch Bearing (A184) Removal and Installation Tools (use with MT303-1 tools when hydraulic press is unavailable)
REFER TO §§ 7.211 A184 BEARING REMOVAL & 7.212 A184 BEARING INSTALLATION

35 MT331-4 Sheave Alignment Bar
REFER TO § 7.230 CLUTCH SHEAVE ALIGNMENT

36 MT569-1 Main Rotor Bolt Drilling Fixture (teeter hinge & A154-1 hub coning hinge bolts)
REFER TO § 9.116 DRILLING MAIN ROTOR HUB BOLTS

37 MT569-6 Main Rotor Bolt Drilling Fixture (B370-1 hub coning hinge bolts)
REFER TO § 9.116 DRILLING MAIN ROTOR HUB BOLTS

38 MT352-1 Main Rotor Trim Tab Bending Measuring Tool (includes MT200-1dial indicator as shown)
REFER TO § 9.116 DRILLING MAIN ROTOR HUB BOLTS

39 MT354-7 Teeter Moment Tool (R22, R44, R66)
REFER TO § 9.124 ADJUSTMENT OF HINGE FRICTION

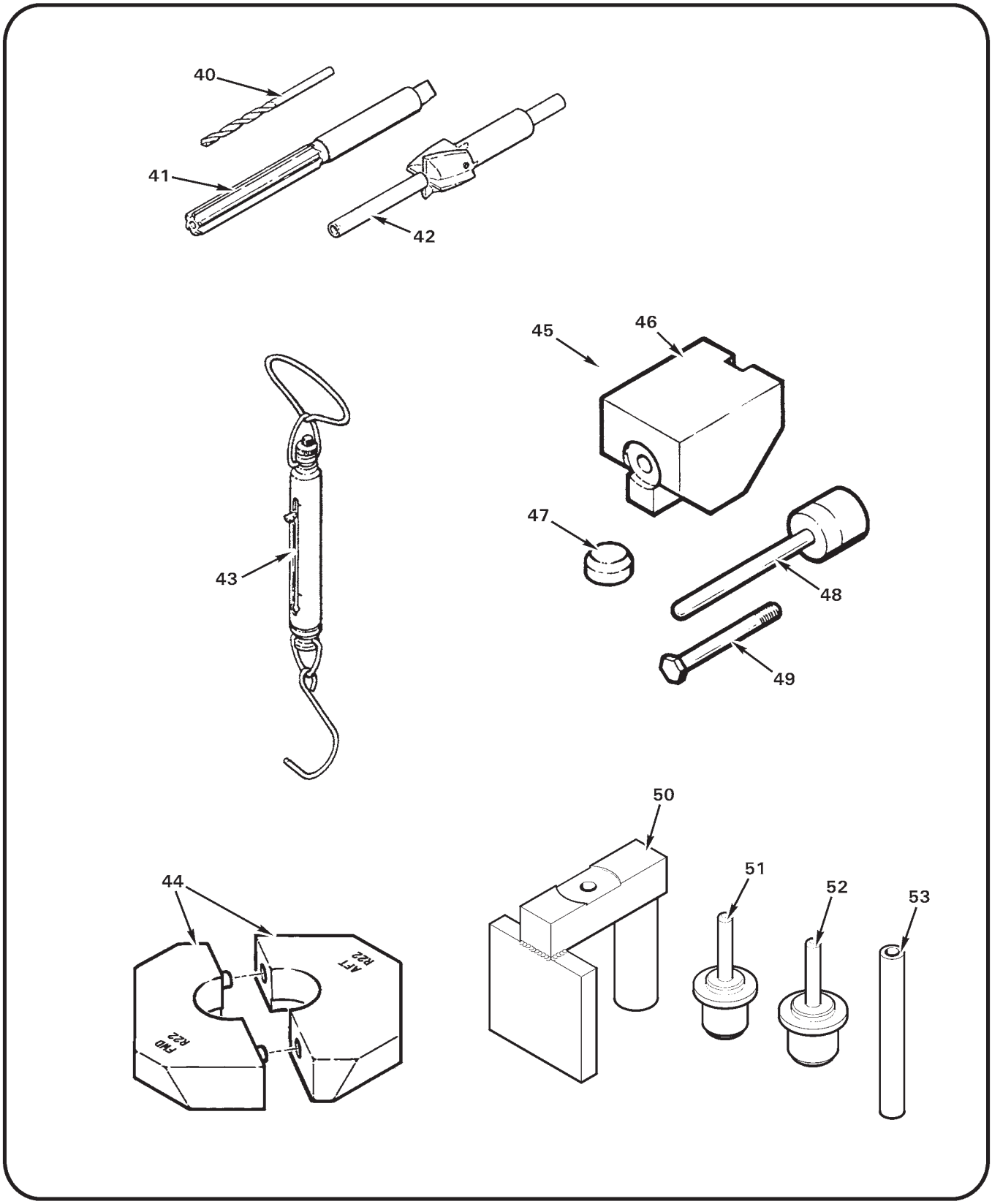

FIGURE 16-3 SPECIAL TOOLS

16.200 Illustrations and Tasks (continued)

40 MT357-1 0.125-inch dia Cobalt Drill Bit
REFER TO § 9.116 DRILLING MAIN ROTOR HUB BOLTS

41 MT357-2 0.375-inch dia Reamer
REFER TO §§ 8.212 COLLECTIVE STICK INSTALLATION, 8.532 BELLCRANK INSTALLATION, & 8.620 A139-1 BEARING INSTALLATION

42 MT358-1 0.750-inch dia Spot-Facing Tool
REFER TO §§ 8.522 A317-1 LOWER BELLCRANK INSTALLATION & 8.620 A139-1 BEARING INSTALLATION

43 MT359-1 Spring Scale
VARIOUS

44 MT376-1 Blocks – Main Rotor Rigging (set; holds cyclic in neutral position)
REFER TO § 10.111 CYCLIC CONTROLS

45 MT556-1 Tail Rotor Elastomeric Bearing Replacement Tools (Incl items 45 thru 48)
REFER TO § 9.215 TAIL ROTOR HUB ELASTOMERIC BEARING REPLACEMENT

46 MT556-5 Support
REFER TO § 9.215 TAIL ROTOR HUB ELASTOMERIC BEARING REPLACEMENT

47 MT556-6 Cap
REFER TO § 9.215 TAIL ROTOR HUB ELASTOMERIC BEARING REPLACEMENT

48 MT556-2 Mandrel Assembly
REFER TO § 9.215 TAIL ROTOR HUB ELASTOMERIC BEARING REPLACEMENT

49 AN4-25A Bolt
REFER TO § 9.215 TAIL ROTOR HUB ELASTOMERIC BEARING REPLACEMENT

50 MT329-13 Support Weldment
REFER TO § 9.126 MAIN ROTOR HUB BEARING REPLACEMENT

MT329-2 Support Weldment (A154-1 Hub)
REFER TO § 9.126 MAIN ROTOR HUB BEARING REPLACEMENT

51 MT329-1 Plug Assembly (A648-1 or A648-3 Bearings)
REFER TO § 9.126 MAIN ROTOR HUB BEARING REPLACEMENT

52 MT329-11 Plug Assembly (A648-2 Bearings)
REFER TO § 9.126 MAIN ROTOR HUB BEARING REPLACEMENT

53 MT329-10 Tube
REFER TO § 9.126 MAIN ROTOR HUB BEARING REPLACEMENT

Intentionally Blank

CHAPTER 17

REVISION LOG

Section	*Title*	*Page*
17.000	Revision Log	17.1

Intentionally Blank

REVISION LOG

MAR 2016

The R22 Maintenance Manual (MM) list of effective pages and effective dates are given below. If a previously issued page is not listed below, it is no longer an effective page and must be discarded. The issue or revision date is in bold at the top of each revision log page.

Please visit www.robinsonheli.com, and click on the Publications tab, to verify the issue or revision date is current. A subscription service form is included in the front of this manual.

Page	Date	Page	Date	Page	Date
i	OCT 2014	1.10	OCT 2014	1.38	OCT 2014
ii	OCT 2014	1.11	OCT 2014	1.39	OCT 2014
iii	OCT 2014	1.12	OCT 2014	1.40	OCT 2014
iv	OCT 2014	1.13	OCT 2014	1.41	OCT 2014
v	OCT 2014	1.14	OCT 2014	1.42	OCT 2014
vi	OCT 2014	1.15	OCT 2014	1.43	OCT 2014
vii	OCT 2014	1.15A	OCT 2014	1.44	OCT 2014
viii	OCT 2014	1.15B	OCT 2014	1.44A	OCT 2014
ix	OCT 2014	1.15C	OCT 2014	1.44B	OCT 2014
x	OCT 2014	1.15D	OCT 2014	1.45	APR 2007
xi	OCT 2014	1.16	OCT 2014	1.46	JUN 2006
xii	OCT 2014	1.17	JUN 2006	1.47	JUN 2006
xiii	OCT 2014	1.18	JUN 2006	1.48	JUN 2006
xiv	OCT 2014	1.19	JUN 2006		
xv	OCT 2014	1.20	JUN 2006	2.i	OCT 2014
xvi	OCT 2014	1.21	JUN 2006	2.ii	OCT 2014
xvii	OCT 2014	1.22	JUN 2006	2.1	OCT 2014
xviii	OCT 2014	1.23	JUN 2006	2.2	OCT 2014
xix	OCT 2014	1.24	JUN 2006	2.3	APR 2007
xx	OCT 2014	1.25	OCT 2014	2.4	JUN 2000
		1.26	OCT 2014	2.5	APR 2007
1.i	OCT 2014	1.27	OCT 2014	2.6	APR 2007
1.ii	OCT 2014	1.28	OCT 2014	2.7	APR 2007
1.1	OCT 2014	1.29	OCT 2014	2.8	APR 2007
1.2	OCT 2014	1.30	OCT 2014	2.9	APR 2007
1.3	OCT 2014	1.31	OCT 2014	2.10	JUN 2006
1.4	OCT 2014	1.32	OCT 2014	2.11	JUN 2006
1.5	OCT 2014	1.33	OCT 2014	2.12	JUN 2006
1.6	OCT 2014	1.34	OCT 2014	2.13	JUN 2006
1.7	OCT 2014	1.35	MAR 2016	2.14	JUN 2006
1.8	OCT 2014	1.36	MAR 2016	2.15	JUN 2006
1.9	OCT 2014	1.37	OCT 2014	2.16	JUN 2006

REVISION LOG

MAR 2016

Page	Date
2.17	JUN 2006
2.18	JUN 2006
2.19	OCT 2014
2.20	OCT 2014
2.21	OCT 2014
2.22	OCT 2014
2.23	OCT 2014
2.24	OCT 2014
2.25	MAR 2016
2.26	MAR 2016
2.27	JUN 2006
2.28	JUN 2006
2.29	JUN 2006
2.30	JUN 2006
2.31	APR 2007
2.32	JUN 2006
2.33	APR 2007
2.34	JUN 2006
2.35	MAR 2016
2.36	MAR 2016
2.37	OCT 2014
2.38	OCT 2014
2.39	OCT 2014
2.40	OCT 2014
2.41	JUN 2006
2.42	JUN 2006
2.43	JUN 2006
2.44	JUN 2006
2.45	JUN 2006
2.46	APR 2007
2.47	JUN 2006
2.48	JUN 2006
2.49	JUN 2006
2.50	APR 2007
2.51	JUN 2006
2.52	JUN 2006
2.53	JUN 2006
2.54	JUN 2006
2.55	JUN 2006
2.56	JUN 2006
2.57	JUN 2006
2.58	JUN 2006
2.59	JUN 2006
2.60	JUN 2006
2.61	JUN 2006
2.62	JUN 2006
2.63	APR 2007
2.64	APR 2007
2.65	APR 2007
2.66	APR 2007
2.67	OCT 2014
2.68	OCT 2014
3.i	OCT 2014
3.ii	OCT 2014
3.1	MAR 2016
3.2	MAR 2016
3.3	OCT 2014
3.4	OCT 2014
3.5	OCT 2014
3.6	OCT 2014
3.7	OCT 2014
3.8	OCT 2014
3.9	OCT 2014
3.10	OCT 2014
3.11	OCT 2014
3.12	OCT 2014
3.13	MAR 2016
3.14	MAR 2016
4.i	OCT 2014
4.ii	OCT 2014
4.1	OCT 2014
4.2	OCT 2014
4.3	5/22/87
4.4	5/22/87
4.5	31 JAN 89
4.6	APR 2005
4.7	5/22/87
4.8	5/22/87
4.9	5/22/87
4.10	JAN 2005
4.11	5/22/87
4.12	APR 2007
4.13	5/22/87
4.14	29 MAR 93
4.15	JAN 2005
4.16	JAN 2005
4.17	JUN 2000
4.18	30 JUN 99
4.19	26 JUL 96
4.20	30 JUN 99
4.21	JUN 2006
4.22	JUN 2006
4.23	7 AUG 92
4.24	7 AUG 92
4.25	7 AUG 92
5.i	OCT 2014
5.ii	OCT 2014
5.1	OCT 2014
5.2	OCT 2014
5.3	APR 2007
5.4	APR 2007
5.5	APR 2007
5.6	APR 2007
5.7	5/22/87
5.8	28 JUL 89
5.9	28 JUL 89
5.10	28 JUL 89
5.11	28 JUL 89
5.12	JUN 2000
5.13	28 JUL 89

REVISION LOG

MAR 2016

Page	Date
6.i	OCT 2014
6.ii	OCT 2014
6.1	OCT 2014
6.2	OCT 2014
6.3	APR 2007
6.4	APR 2007
6.5	JUN 2006
6.6	JUN 2006
6.7	APR 2005
6.8	APR 2005
6.9	JUN 2006
6.10	JUN 2006
6.11	26 JUL 96
6.12	30 JUN 99
6.13	19 SEP 97
6.14	19 SEP 97
6.15	JAN 2005
6.16	26 JUL 96
6.16A	7 AUG 92
6.16B	JAN 2005
6.16C	7 AUG 92
6.16D	7 AUG 92
6.17	APR 2007
6.18	APR 2007
6.19	APR 2007
6.20	APR 2007
6.21	OCT 2014
6.22	OCT 2014
6.23	MAR 2004
6.24	MAR 2004
6.25	APR 2007
6.26	APR 2007
6.27	APR 2007
6.28	APR 2007
6.29	APR 2007
6.30	APR 2007
7.i	OCT 2014
7.ii	OCT 2014
7.1	OCT 2014
7.2	OCT 2014
7.3	JUN 2006
7.4	5/22/87
7.5	JUN 2006
7.6	JUN 2006
7.7	19 SEP 97
7.8	19 SEP 97
7.9	19 SEP 97
7.9A	19 SEP 97
7.9B	19 SEP 97
7.10	JUN 2000
7.11	5/22/87
7.12	3 MAR 99
7.13	3 MAR 99
7.14	JUN 2000
7.15	OCT 2014
7.16	OCT 2014
7.17	APR 2005
7.18	MAR 2004
7.19	JUN 2006
7.20	JUN 2006
7.21	JUN 2006
7.22	JUN 2006
7.23	JUN 2000
7.24	JUN 2000
7.25	JUN 2000
7.26	MAR 2004
7.27	MAR 2004
7.28	3 MAR 99
7.28A	3 MAR 99
7.28B	3 MAR 99
7.29	5/22/87
7.30	5/22/87
7.31	JUN 2006
7.32	JUN 2006
7.33	OCT 2014
7.33A	OCT 2014
7.33B	MAR 2004
7.34	5/22/87
7.35	26 JUL 96
7.36	MAR 2004
7.37	26 JUL 96
7.38	26 JUL 96
7.38A	26 JUL 96
7.38B	26 JUL 96
7.39	19 SEP 97
7.40	19 SEP 97
7.41	19 SEP 97
7.42	19 SEP 97
7.43	19 SEP 97
7.44	19 SEP 97
7.44A	4/15/88
7.44B	5 JUL 90
7.44C	26 JUL 96
7.44D	7 AUG 92
7.45	JUN 2006
7.46	JUN 2006
7.47	JUN 2000
7.48	JUN 2000
7.48A	31 DEC 98
7.48B	MAR 2004
7.49	APR 2007
7.50	APR 2007
7.51	30 JUN 99
7.52	JAN 2005
7.53	5/22/87
7.54	JUN 2006
7.55	JAN 2005
7.56	31 JAN 89
7.57	31 JAN 89
8.i	OCT 2014
8.ii	OCT 2014
8.iii	OCT 2014

REVISION LOG

MAR 2016

Page	Date
8.iv	OCT 2014
8.1	OCT 2014
8.2	OCT 2014
8.3	5/22/87
8.4	5/22/87
8.5	5/22/87
8.6	5/22/87
8.7	5/22/87
8.8	5/22/87
8.9	5/22/87
8.10	5/22/87
8.11	5/22/87
8.12	5/22/87
8.13	5/22/87
8.14	4/15/88
8.15	5/22/87
8.16	5/22/87
8.17	5/22/87
8.18	7 AUG 92
8.19	12 JAN 90
8.20	12 JAN 90
8.21	5/22/87
8.22	5/22/87
8.23	5/22/87
8.24	5/22/87
8.25	5/22/87
8.26	MAR 2004
8.27	26 JUL 96
8.28	MAR 2004
8.29	5/22/87
8.30	MAR 2004
8.31	19 SEP 97
8.32	5 JUL 90
8.33	19 SEP 97
8.34	30 JUN 99
8.34A	MAR 2004
8.34B	26 JUL 96
8.34C	MAR 2004
8.34D	MAR 2004
8.35	5/22/87
8.36	5/22/87
8.37	JUN 2006
8.38	JUN 2006
8.39	JUN 2006
8.40	APR 2007
8.41	APR 2007
8.42	JUN 2006
8.43	JUN 2006
8.44	JUN 2006
8.45	19 SEP 97
8.46	19 SEP 97
8.47	19 SEP 97
8.48	26 JUL 96
8.49	MAR 2004
8.50	5/22/87
8.51	5/22/87
8.52	5/22/87
8.53	5/22/87
8.54	5/22/87
8.55	JAN 2005
8.56	JAN 2005
8.57	5/22/87
8.58	5/22/87
8.59	JUN 2006
8.60	JUN 2006
8.61	22 JAN 93
8.62	22 JAN 93
8.63	APR 2005
8.64	APR 2005
9.i	OCT 2014
9.ii	OCT 2014
9.1	OCT 2014
9.2	OCT 2014
9.3	MAR 2016
9.4	MAR 2016
9.5	MAR 2016
9.6	MAR 2016
9.7	MAR 2016
9.8	MAR 2016
9.9	MAR 2016
9.10	MAR 2016
9.10A	MAR 2016
9.10B	MAR 2016
9.11	MAR 2016
9.12	MAR 2016
9.13	MAR 2016
9.14	MAR 2016
9.15	MAR 2016
9.16	MAR 2016
9.17	OCT 2014
9.18	OCT 2014
9.19	OCT 2014
9.20	OCT 2014
9.21	OCT 2014
9.22	OCT 2014
9.23	OCT 2014
9.24	OCT 2014
9.25	OCT 2014
9.26	OCT 2014
9.26A	OCT 2014
9.26B	OCT 2014
9.26C	OCT 2014
9.26D	OCT 2014
9.27	JUN 2000
9.28	JUN 2000
9.29	JUN 2006
9.30	JUN 2006
9.31	31 DEC 98
9.32	31 DEC 98
9.32A	JUN 2000
9.32B	JUN 2000
9.32C	MAR 2004
9.32D	JUN 2000

REVISION LOG

MAR 2016

Page	Date
9.33	5/22/87
9.34	5/22/87
9.35	19 SEP 97
10.i	OCT 2014
10.ii	OCT 2014
10.1	OCT 2014
10.2	OCT 2014
10.3	5/22/87
10.4	5/22/87
10.5	APR 2005
10.6	APR 2007
10.7	APR 2005
10.8	5/22/87
10.9	5/22/87
10.10	5/22/87
10.11	5/22/87
10.12	5/22/87
10.13	5/22/87
10.14	5/22/87
10.15	APR 2007
10.16	APR 2007
10.17	5/22/87
10.18	5/22/87
10.19	5/22/87
10.20	MAR 2004
10.21	31 JAN 00
10.22	5/22/87
10.23	28 JUL 89
10.24	30 JUN 99
10.25	5/22/87
10.25A	28 JUL 89
10.25B	28 JUL 89
10.26	28 JUL 89
10.26A	JUN 2006
10.26B	JUN 2006
10.27	JUN 2006
10.28	MAR 2004
10.29	19 SEP 97
10.30	5/22/87
10.31	OCT 2014
10.32	OCT 2014
10.32A	OCT 2014
10.32B	OCT 2014
10.33	5/22/87
10.34	5/22/87
10.35	JAN 2005
10.36	JAN 2005
10.37	JAN 2005
10.38	JAN 2005
10.39	JAN 2005
10.40	JAN 2005
11.i	OCT 2014
11.ii	OCT 2014
11.1	OCT 2014
11.2	OCT 2014
11.3	5/22/87
11.4	5/22/87
11.5	APR 2005
11.6	APR 2005
12.i	OCT 2014
12.ii	OCT 2014
12.1	OCT 2014
12.2	OCT 2014
12.3	OCT 2014
12.4	OCT 2014
12.5	OCT 2014
12.6	OCT 2014
12.7	OCT 2014
12.8	OCT 2014
12.9	OCT 2014
12.10	OCT 2014
12.11	OCT 2014
12.12	OCT 2014
12.13	OCT 2014
12.14	OCT 2014
12.15	OCT 2014
12.16	OCT 2014
12.17	OCT 2014
12.18	OCT 2014
13.i	OCT 2014
13.ii	OCT 2014
13.1	OCT 2014
13.2	OCT 2014
13.3	OCT 2014
13.4	OCT 2014
13.5	OCT 2014
13.6	OCT 2014
13.7	OCT 2014
13.8	OCT 2014
13.9	OCT 2014
13.10	OCT 2014
13.11	OCT 2014
13.12	OCT 2014
14.i	OCT 2014
14.ii	OCT 2014
14.1	OCT 2014
14.2	OCT 2014
14.3	JUN 2006
14.3A	JUN 2006
14.3B	JUN 2006
14.4	JUN 2006
14.5	APR 2007
14.6	APR 2007
14.7	APR 2007
14.8	APR 2007
14.9	APR 2007
14.10	APR 2007
14.11	OCT 2014
14.11A	OCT 2014

REVISION LOG

MAR 2016

Page	Date
14.11B	OCT 2014
14.12	OCT 2014
14.13	5/22/87
14.14	5/22/87
14.15	5/22/87
14.16	12 JAN 90
14.16A	12 JAN 90
14.16B	12 JAN 90
14.17	12 JAN 90
14.17A	12 JAN 90
14.17B	12 JAN 90
14.17C	12 JAN 90
14.17D	12 JAN 90
14.18	5/22/87
14.18A	30 JUN 99
14.18B	30 JUN 99
14.19	5/22/87
14.20	12 JAN 90
14.21	30 JUN 99
14.21A	30 JUN 99
14.21B	30 JUN 99
14.22	5/22/87
14.23	MAR 2004
14.23A	10/15/88
14.23B	10/15/88
14.23C	MAR 2004
14.23D	MAR 2004
14.23E	MAR 2004
14.23F	MAR 2004
14.23G	MAR 2004
14.23H	OCT 2014
14.24	OCT 2014
14.25	26 JUL 96
14.26	5/22/87
14.26A	7 AUG 92
14.26B	30 JUN 99
14.26C	JUN 2000
14.26D	JUN 2000
14.26E	JUN 2000
14.26F	JUN 2000
14.26G	JUN 2000
14.26H	JUN 2000
14.26I	JUN 2000
14.26J	JUN 2000
14.26K	MAR 2004
14.26L	MAR 2004
14.27	5 JUL 90
14.28	5/22/87
14.28A	5 JUL 90
14.28B	5 JUL 90
14.29	5/22/87
14.30	5/22/87
14.31	5/22/87
14.32	5/22/87
14.33	5/22/87
14.34	5/22/87
14.35	5/22/87
14.36	5/22/87
14.37	5/22/87
14.38	5/22/87
14.39	28 JUL 89
14.40	5/22/87
14.40A	JUN 2000
14.40B	JUN 2000
14.40C	JUN 2000
14.40D	JUN 2000
14.41	9/25/87
14.42	9/25/87
14.43	5/22/87
14.44	5/22/87
14.45	5/22/87
14.46	5/22/87
14.47	5/22/87
14.48	5/22/87
14.49	9/25/87
14.50	5/22/87
14.51	7 AUG 92
14.52	5/22/87
14.53	5/22/87
14.54	4/22/87
14.55	5/22/87
14.56	5/22/87
14.57	5/22/87
14.58	5/22/87
14.59	5/22/87
14.60	5/22/87
14.61	5/22/87
14.62	5/22/87
14.63	5/22/87
14.64	19 SEP 97
14.65	OCT 2014
14.66	OCT 2014
14.67	OCT 2014
14.68	OCT 2014
14.69	OCT 2014
14.70	OCT 2014
14.71	OCT 2014
14.72	OCT 2014
14.73	OCT 2014
14.74	OCT 2014
14.75	OCT 2014
14.76	OCT 2014
14.77	OCT 2014
14.78	OCT 2014
14.79	OCT 2014
14.80	OCT 2014
14.81	OCT 2014
14.82	OCT 2014
14.83	OCT 2014
14.84	OCT 2014
14.85	OCT 2014
14.86	OCT 2014
14.87	OCT 2014
14.88	OCT 2014

REVISION LOG

MAR 2016

Page	Date	Page	Date	Page	Date
15.i	OCT 2014				
15.ii	OCT 2014				
15.1	OCT 2014				
15.2	OCT 2014				
15.3	5/22/87				
15.4	5/22/87				
15.5	5/22/87				
15.6	5/22/87				
15.7	5/22/87				
15.8	5/22/87				
16.i	OCT 2014				
16.ii	OCT 2014				
16.1	OCT 2014				
16.2	OCT 2014				
16.3	MAR 2016				
16.4	MAR 2016				
16.5	MAR 2016				
16.6	MAR 2016				
16.7	MAR 2016				
16.8	MAR 2016				
17.i	MAR 2016				
17.ii	MAR 2016				
17.1	MAR 2016				
17.2	MAR 2016				
17.3	MAR 2016				
17.4	MAR 2016				
17.5	MAR 2016				
17.6	MAR 2016				
17.7	MAR 2016				
17.8	MAR 2016				

Intentionally Blank