ROBINSON HELICOPTER COMPANY

R66 MAINTENANCE MANUAL
AND INSTRUCTIONS FOR CONTINUED AIRWORTHINESS
RTR 660 VOLUME I

Production Certificate Number 424WE
Type Certificate Number R00015LA

Robinson Helicopter Company
2901 Airport Drive
Torrance, California 90505-6115
United States of America

Phone: (310) 539-0508
Fax: (310) 539-5198
Web: www.robinsonheli.com

OFFICE HOURS

Monday through Friday, 7:30 a.m. to 4:30 p.m., Pacific Time.
Lunch hour is 11:30 a.m. to 12:30 p.m.

HOLIDAYS

Please visit www.robinsonheli.com for a complete list of holidays and company shutdowns.

CUSTOMER SUPPORT AND SPARES ORDERS

Please visit www.robinsonheli.com for a complete service directory.

Procure parts from any R66 Dealer or Service Center,
or order directly from RHC Customer Service via email, fax, or phone.

PUBLICATIONS

Please visit www.robinsonheli.com to view our publications electronically.

SUBSCRIPTION ORDER AND RENEWAL FORMS

Subscription order and renewal forms are located at www.robinsonheli.com.

CHAPTER LIST

	Introduction
Chapter 1	General
Chapter 4	Airworthiness Limitations
Chapter 5	Inspections
Chapter 6	Dimensions and Descriptions
Chapter 7	Jacking and Hoisting
Chapter 8	Weight and Balance
Chapter 9	Ground Handling
Chapter 10	Parking and Storage
Chapter 11	Placards and Markings
Chapter 12	Servicing
Chapter 18	Track and Balance
Chapter 20	Standard Practices
Chapter 21	Environment Control
Chapter 22	Autopilot
Chapter 25	Furnishings
Chapter 28	Fuel System
Chapter 29	Hydraulics
Chapter 32	Landing Gear
Chapter 33	Lights
Chapter 52	Doors and Windows
Chapter 53	Fuselage
Chapter 62	Main Rotor
Chapter 63	Main Rotor Drive System
Chapter 64	Tail Rotor
Chapter 65	Tail Rotor Drive System
Chapter 67	Flight Controls
Chapter 71	Powerplant
Chapter 75	Engine Air Systems
Chapter 76	Engine Controls
Chapter 79	Engine Oil System
Chapter 95	Instrument System
Chapter 96	Electrical System
Chapter 97	Avionics
Chapter 98	Wiring Diagrams
Chapter 99	Special Tools
Chapter 100	Revision Log

Intentionally Blank

TECHNICAL PUBLICATIONS

RECOMMENDED CHANGE REPORT

Please direct recommended changes to RHC Technical Publications via the email address listed below, by phone, or by submitting a duplicate of this completed form by fax or mail. Please include or have available the information detailed in this form.

Recommended changes may include but are not limited to general comments, corrections, omitted information, or clarification of instructions.

Please send recommendations to:

Email: techpubs@robinsonheli.com
Phone: (310) 539-0508
Fax: (310) 539-5198

Robinson Helicopter Company
Attention: Technical Publications
2901 Airport Drive
Torrance, CA 90505-6115
UNITED STATES

Date: _____ Publication: _____

Name: _____ Chapter: _____

Company: _____ Section: _____

Helicopter Model: _____ Page: _____

Serial Number: _____ Revision: _____

Phone: _____

Email: _____

COMMENTS:

_____

_____

_____

_____

_____

_____

_____

_____

_____

Intentionally Blank

ROBINSON HELICOPTER COMPANY, INC.
LIMITED AIRCRAFT WARRANTY

Effective R66 Serial Number 0003 & on

Robinson Helicopter Company, Inc. (hereafter referred to as RHC) warrants each new helicopter to be free from defects in material and workmanship appearing within two years from the date of delivery from the RHC factory or during the first one thousand (1000) hours of operation, whichever event occurs first; provided, the aircraft has been subjected to normal use and service. This Warranty is limited to repair or replacement on an exchange basis, as selected by RHC, of any part, which upon examination by RHC is deemed to have been defective when the aircraft left the factory. A new warranty period is not established for parts replaced under the terms of this Warranty. Such replacement parts are warranted only for the remainder of the original warranty period. This Warranty shall not apply to any helicopter or part which has been repaired or altered outside the factory, and which, in RHC's judgment, has affected the performance or reliability of the helicopter or part. This Warranty shall not apply to any helicopter or part which has been subject to corrosion, misuse, negligence or accident, nor to any parts normally replaced during routine maintenance, such as, air cleaners, skid shoes, rod end or spherical bearings, light bulbs, etc. This Warranty shall not apply to any helicopter which has been crated for shipping unless such crating is performed by RHC. RHC is not responsible for the cost of shipping parts under the terms of this Warranty. However, RHC will credit the RHC Dealership, which sold and delivered the new helicopter to its original owner, with an allowance for labor performed by that Dealership for removing and reinstalling the defective part. No credit will be issued for trouble-shooting.

RHC makes no Warranty with respect to batteries, instruments, avionics or other trade accessories since they are usually warranted separately by their respective manufacturers. New aircraft are equipped with new engines which have a separate Rolls Royce limited warranty.

ADDITIONAL WARRANTY FOR MAIN & TAIL GEARBOXES

In addition to the warranty specified above, an extended pro-rated warranty shall apply to the main and tail gearboxes for the first 2000 hours of service or three years from the date of manufacture, whichever event occurs first. During this period, if a gearbox must be overhauled due to failure of a part which was defective when it left the factory, RHC will prorate the cost of the overhaul by dividing the hours in service by 2000 or the months in service by thirty-six (36), whichever fraction is greater.

THE FOREGOING WARRANTY IS EXCLUSIVE AND IS GIVEN AND ACCEPTED IN LIEU OF ANY AND ALL OTHER WARRANTIES AND REPRESENTATIONS, EXPRESS, IMPLIED, OR STATUTORY, WHETHER WRITTEN OR ORAL, INCLUDING WITHOUT LIMITATION ANY IMPLIED WARRANTIES OF MERCHANTABILITY, FITNESS FOR A PARTICULAR PURPOSE OR TRADE USAGE, THE REMEDIES OF THE BUYER SHALL BE LIMITED TO THOSE PROVIDED HEREIN. IN NO EVENT WILL THE MANUFACTURER BE LIABLE FOR LOSSES RESULTING FROM LOSS OF USE OF THE HELICOPTER, COLLATERAL, CONSEQUENTIAL OR SPECIAL DAMAGES, OR ANY OTHER COSTS.

Warranty adjustments with respect to any helicopter or parts manufactured by RHC will be made only upon compliance with the following procedure:

(1) The defective part or assembly, together with a written Warranty Claim, must be returned to RHC not later than thirty (30) days after discovery of the defect nor more than thirty (30) days after expiration of the Warranty period.

(2) RHC will, after inspection, determine whether the material or part was defective when it left the factory and will respond accordingly. Final determination of a Warranty adjustment rests with RHC.

ROBINSON HELICOPTER COMPANY, INC.
2901 Airport Drive
Torrance, California 90505 U.S.A.

Effective 01 June 2010

ROBINSON HELICOPTER COMPANY, INC.
LIMITED PARTS WARRANTY

Robinson Helicopter Company, Inc. (hereafter referred to as RHC) warrants each new and factory overhauled helicopter part to be free from defects in material and workmanship appearing within one year from the date of delivery from the RHC factory or during the first one thousand (1000) hours of operation, whichever event occurs first; provided, the part has been subjected to normal use and service. This Warranty is limited to repair or replacement on an exchange basis, as selected by RHC, of any part, which upon examination by RHC is deemed to have been defective when the part left the factory. A new warranty period is not established for parts replaced under the terms of this Warranty. Such replacement parts are warranted only for the remainder of the original warranty period. RHC is not responsible for the cost of removing, shipping or reinstallation of parts under the terms of this Warranty. This Warranty shall not apply to any part which has been repaired or altered outside the factory, and which, in RHC's judgment, has affected the performance or reliability of the part. This Warranty shall not apply to any part which has been subject to corrosion, misuse, negligence or accident, nor to any parts normally replaced during routine maintenance, such as, air cleaners, skid shoes, rod end or spherical bearings, light bulbs, etc.

RHC makes no Warranty with respect to engines, batteries, instruments, avionics or other trade accessories since they are usually warranted separately by their respective manufacturers.

ADDITIONAL WARRANTY FOR MAIN & TAIL GEARBOXES

In addition to the warranty specified above, an extended pro-rated warranty shall apply to new and factory overhauled main and tail gearboxes installed, on all R22 & R44 helicopters for the first 2200 hours of service, on all R44 Cadet helicopters for the first 2400 hours of service, on all R66 helicopters for the first 2000 hours of service, or three years from the date of manufacture, whichever event occurs first. During this period, if a gearbox must be overhauled due to failure of a part which was defective when it left the factory, RHC will pro-rate the cost of the overhaul by the hours in service or the months in service, whichever fraction is greater.

THE FOREGOING WARRANTY IS EXCLUSIVE AND IS GIVEN AND ACCEPTED IN LIEU OF ANY AND ALL OTHER WARRANTIES AND REPRESENTATIONS, EXPRESS, IMPLIED, OR STATUTORY, WHETHER WRITTEN OR ORAL, INCLUDING WITHOUT LIMITATION ANY IMPLIED WARRANTIES OF MERCHANTABILITY, FITNESS FOR A PARTICULAR PURPOSE OR TRADE USAGE, THE REMEDIES OF THE BUYER SHALL BE LIMITED TO THOSE PROVIDED HEREIN. IN NO EVENT WILL THE MANUFACTURER BE LIABLE FOR LOSSES RESULTING FROM LOSS OF USE OF THE HELICOPTER, COLLATERAL, CONSEQUENTIAL OR SPECIAL DAMAGES, OR ANY OTHER COSTS.

Warranty adjustments with respect to any parts manufactured by RHC will be made only upon compliance with the following procedure:

(1) The defective part or assembly, together with a written Warranty Claim, must be returned to RHC not later than thirty (30) days after discovery of the defect nor more than thirty (30) days after expiration of the Warranty period.

(2) RHC will, after inspection, determine whether the material or part was defective when it left the factory and will respond accordingly. Final determination of a Warranty adjustment rests with RHC.

ROBINSON HELICOPTER COMPANY, INC.
2901 Airport Drive
Torrance, California 90505 U.S.A.

Effective 01 June 2016

CHAPTER 1

GENERAL

Section	Title	Page
1-00	Introduction	1.1
1-10	R66 Maintenance Manual Revisions	1.1
1-20	R66 Maintenance Authorization	1.2
1-30	Component Maintenance Authorization	1.2
1-40	Maintenance Record	1.2
1-50	Notations	1.3
1-60	Definitions and Abbreviations	1.3
1-70	Service Information	1.4A
1-71	Part Designation	1.4A
1-72	Returning Parts	1.4A
1-73	Ordering and Shipping	1.4A
1-74	Warranty Claims	1.4A
1-75	Customer Service Directory	1.4A
1-80	Assembly Instructions for R66 Helicopter Crated for Export	1.5

Intentionally Blank

CHAPTER 1

GENERAL

1-00 Introduction

The R66 Maintenance Manual contains instructions necessary for proper maintenance, servicing, and handling of the R66 helicopter. The R66 Instructions for Continued Airworthiness (ICA) includes the R66 Maintenance Manual (MM), R66 Illustrated Parts Catalog (IPC), R66 Pilot's Operating Handbook (POH), R66 Service Bulletins (SB), R66 Service Letters (SL), RR300 Series Operation and Maintenance Manual (OMM), applicable Rolls-Royce technical publications, and applicable component manufacturer technical publications.

Service Bulletins are issued by Robinson Helicopter Company (RHC), Rolls-Royce, and component manufacturers. RHC Service Bulletin compliance is mandatory; comply with other applicable Service Bulletins as directed. RHC technical publications are available online at www.robinsonheli.com. Rolls-Royce technical publications are available online at https://fast.aeromanager-online.com.

Kit instructions are issued for field installation of either optional or mandatory (due to Service Bulletin or parts obsolescence) equipment upgrades, or provisions for upgrades. Kit instructions issued by RHC either implement approved type design data, or are approved as type design data.

The R66 Maintenance Manual is formatted in Air Transport Association of America Specification No. 100 (ATA-100). Style, content, and structure deviates from ATA-100 when necessary for clarity, and for logic of presentation. A list of chapters and a complete list of contents is located in the *Introduction*. Chapters are separated by tab dividers and chapter contents are listed in the chapter front pages.

CAUTION

Always read instructions completely before performing a task.

1-10 R66 Maintenance Manual Revisions

Before using the R66 Maintenance Manual, verify it consists of current effective pages. The list of effective pages is located in the Revision Log in Chapter 100. When a new manual is purchased, complete and submit the Subscription Order Form available online at www.robinsonheli.com. Subscribers receive publication revisions for a two-year period. Renew subscriptions annually. The revision status for all RHC technical publications is available online at www.robinsonheli.com.

1-20 R66 Maintenance Authorization

Only appropriately certificated mechanics who have successfully completed an R66 factory-sponsored maintenance course, or are under direct supervision of the above-stated mechanic, are authorized to perform maintenance, repairs, or inspections on the R66 helicopter. Annual inspections of U.S.-registered light helicopters must be performed by holders of an Inspection Authorization (IA) certificate or by repair stations certificated by the Federal Aviation Administration (FAA). The daily preflight and some preventive maintenance may be performed by the above-stated mechanics, or by the pilot/owner after receiving appropriate instruction in accordance with the R66 Pilot's Operating Handbook and applicable aviation regulations.

1-30 Component Maintenance Authorization

Only appropriately certificated mechanics who have successfully completed both a factory-sponsored maintenance course and component maintenance course, and who possess technical data supplied by RHC, are authorized to perform maintenance specified in the Component Maintenance Manual (CMM). Component maintenance may only be performed at an RHC-authorized Service Center that has required special tools.

1-40 Maintenance Record

The Airframe Maintenance Record is available online at www.robinsonheli.com.

Airframe Maintenance Record blank PDF forms may be used for R22-series, R44-series, and R66 Turbine helicopters. Component Record blank PDF forms may be used for life-limited or TBO components. Blank paper copies are available for purchase (P/N R8478 Airframe Maintenance Record and P/N R8479 Component Record [pack of 20]).

A Component Record is a maintenance record of the removals, installations, or maintenance performed on a life-limited or TBO component. When a life-limited or TBO component is installed in the helicopter, the Component Record card is inserted in the Airframe Maintenance Record. When a life-limited or TBO component is removed from the helicopter, remove the Component Record card and keep the card with the Component. Major assemblies may contain one or more life-limited or TBO component.

RHC encourages operators to utilize Component Record cards to assist in tracking time on interchangeable parts since service lives may be different between models.

RHC does not create Component Record cards for spares, however, operators may create their own.

RHC's Repair Station does not require a Component Record card in order to perform work on a component, unlike a Component/Return Authorization form.

RHC recommends using a toner-based laser, or a pigment-based inkjet, color printer and 65 lb white (96 bright) premium card stock for Maintenance Record or Component Record card production. Maintenance Record binders and tab sets are available separately (P/N R8656 Maintenance Record Binder and P/N R8650 Maintenance Record Tabs).

1-50 Notations

The following notations will be found throughout the manual:

NOTE
A NOTE provides emphasis or supplementary explanation.

CAUTION
Equipment damage can result if a **CAUTION** is not followed.

WARNING
Personal injury or death can result if a WARNING is not followed.

1-60 Definitions and Abbreviations

Refer to R66 Pilot's Operating Handbook (POH) Section 1 for additional definitions and abbreviations.

A. Definitions

14 CFR § 27.602 Critical Part:	A part identified as a 14 CFR § 27.602 critical part within this manual is subject to special inspection requirements. RHC Technical Support must be notified whenever the part fails to meet the special inspection requirements.
12 years:	With respect to a 12 year inspection or life-limit, 12 years means 12 years from the date of the factory-issued airworthiness certificate or factory-issued authorized release certificate (FAA Form 8130-3, Airworthiness Approval Tag).
Annually:	With respect to an annual inspection, annually means within the preceding 12 calendar months.
Datum:	An imaginary vertical plane from which all horizontal measurements are taken for balance purposes with the aircraft in level flight attitude. Refer to § 6-20 for R66 datum location.
Empty Weight:	Empty Weight includes the weight of the airframe, powerplant, required and installed equipment, fixed ballast, unusable fuel, and gearbox oil. Refer to R66 Turbine Type Certificate Data Sheet (TCDS) in § 4-30. Refer to Equipment List/Weight and Balance Data Sheet (RF 134) and Weight and Balance Record in R66 POH Section 6 for installed equipment.
Life-Limited Part:	Refer to § 4-10. Any part for which a mandatory replacement limit is specified in the type design, the Instructions for Continued Airworthiness, or the maintenance manual.
Time in Service:	With respect to maintenance time records, time in service means the time from the moment an aircraft leaves the surface of the earth until it touches it at the next point of landing.

1-60 Definitions and Abbreviations (continued)

B. Abbreviations

14 CFR:	Title 14 of the Code of Federal Regulations. The Federal Aviation Regulations (FARs) are part of the CFR.
AOG:	Aircraft on Ground
ATA-100:	Air Transport Association of America Specification No. 100
BL:	Butt Line Station locations
CRA:	Component Return/Authorization
ELT:	Emergency Locator Transmitter
EMU:	Engine Monitoring Unit
FCU:	Fuel Control Unit
FS:	Fuselage Station locations
GCU:	Generator Control Unit
HID:	High Intensity Discharge
HS:	Horizontal Stabilizer Station locations
LBL:	Left Butt Line Station locations
LED:	Light Emitting Diode
LRU:	Line-Replaceable Unit
MRDS:	Main Rotor Drive Shaft
MRGB:	Main Rotor Gearbox
OEM:	Original Equipment Manufacturer
PTG:	Power Turbine Governor
R66 IPC:	R66 Illustrated Parts Catalog
R66 MM:	R66 Maintenance Manual
R66 POH:	R66 Pilot's Operating Handbook
RHC:	Robinson Helicopter Company
RR300 Series OMM:	Rolls-Royce RR300 Series Operation and Maintenance Manual
RS:	Rotor Station locations
SB:	Service Bulletin
SL:	Service Letter
TBO:	Time Between Overhaul
TCDS:	Type Certificate Data Sheet
TRDS:	Tail Rotor Drive Shaft
TRGB:	Tail Rotor Gearbox
TS:	Tailcone Station locations
TSN:	Time Since New
TSO:	Time Since Overhaul
WL:	Water Line Station locations

1-70 Service Information

1-71 Part Designation

Robinson parts are designated with a part number prefix “A”, “B”, “C”, etc., followed by three digits and a dash number.

A revision letter or letters follow(s) the stamped or ink-marked part number. Revision progression is A thru Z, followed by AA thru AZ, followed by BA thru BZ, etc. Unless otherwise specified, any revision of the same part number is interchangeable, such as “A101-1 A” and “A101-1 D”.

1-72 Returning Parts

All parts shipped to RHC must include a signed Component Return/Authorization (CRA) Form available online at www.robinsonheli.com.

1-73 Ordering and Shipping

Procure parts from any R66 Dealer or Service Center, or order directly from assigned RHC Customer Service Representative via email, fax, or phone.

1-74 Warranty Claims

Complete CRA Form (refer to § 1-72) and, in the Warranty Claim section, indicate if rotorcraft or component is under warranty. If claim is for parts or for labor allowance due to a Service Bulletin issued against rotorcraft or component, write in “per SB-XX” adjacent to requested warranty action.

1-75 Customer Service Directory

Please visit www.robinsonheli.com for a complete service directory.

Intentionally Blank

1-80 Assembly Instructions for R66 Helicopter Crated for Export

NOTE

Aircraft assembly to be performed by a certificated mechanic.

1. Remove top of cabin assembly crate. Remove wall marked "A" by removing lag bolts painted black. Remove empennage assembly. Remove remaining walls. Remove all parts, except cabin assembly, from crate base. Open crate containing blades, skid tubes, and tailcone.

2. Refer to R66 Illustrated Parts Catalog (IPC) Figure 32-1. Install hardware securing forward and aft strut assemblies (cross tubes installed) onto skid tubes. Standard torque bolts per Section 20-32 and torque stripe per Figure 5-1.

3. Remove tailcone cowling per Section 53-23. Remove engine cowling per Section 53-21.

4. Remove shipping supports (ty-raps, foam, tape, etc.) from main rotor gearbox compartment, but leave cannon plugs taped and fluid line dust caps installed. Remove engine air intake cover by opening air filter bypass door and pulling string and cover through the door. Remove main rotor gearbox mounting hardware, nylon spacers, and upper frame strut assemblies.

5. Remove top of main rotor gearbox crate and position crate so gearbox is upright. Refer to Section 7-20. Install hoisting equipment and lifting fixture or nylon rope on main rotor hub. Remove hoist slack to support gearbox, remove lag bolts securing gearbox to wooden divider, and carefully hoist gearbox from crate (do not damage pitot tube).

6. Install main rotor gearbox per Section 63-20 steps 1 thru 9, but do not remove hoisting equipment and lifting fixture or nylon rope.

7. Perform (engine driveline) forward flex plate shimming per Section 63-11.

8. Refer to Section 7-20. Remove hoist slack to support cabin assembly, remove lag and carriage bolts securing metal angles to crate, and hoist cabin & attached metal angles off of crate base.

CAUTION

Do not lift helicopter and attached crate using main rotor hub; damage to main rotor gearbox and frames could result.

9. Remove metal angles from cabin assembly landing gear attach points. Install landing gear assembly per Section 32-10.

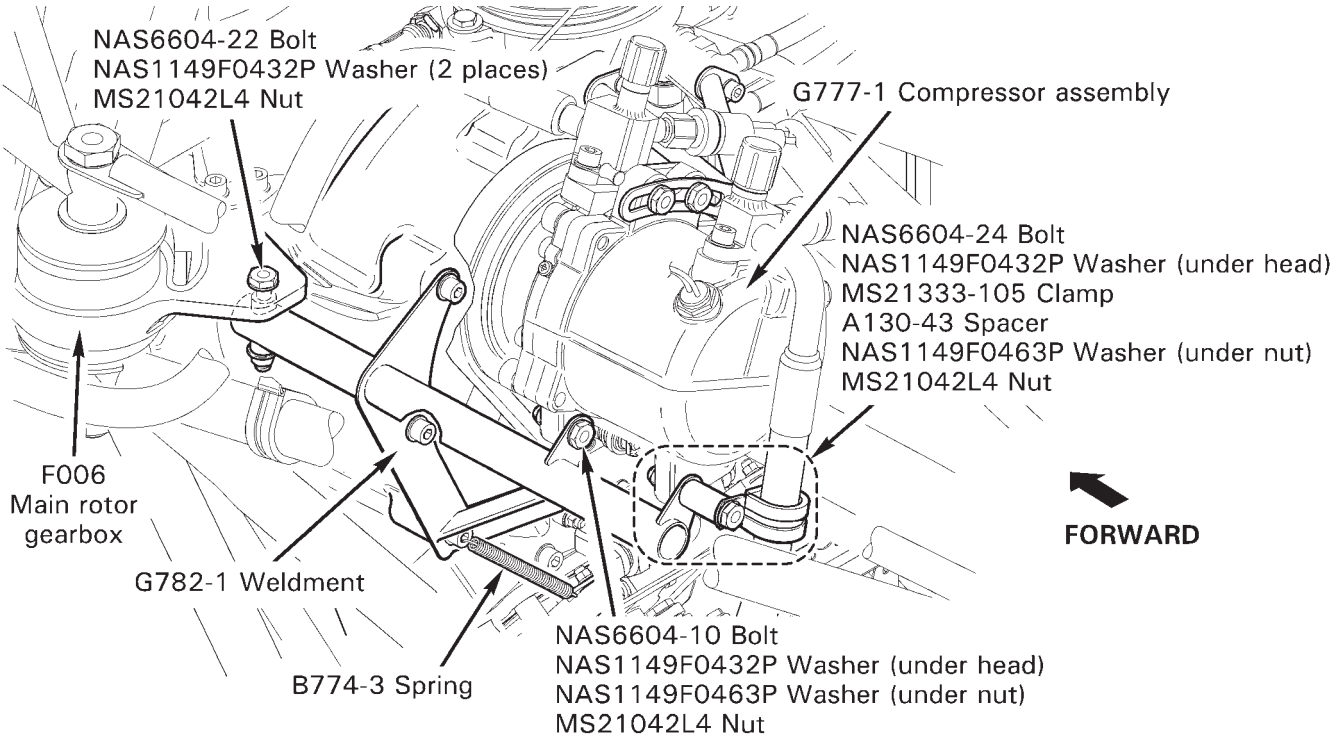

FIGURE 1-1 ASSEMBLY INSTRUCTIONS FOR R66 HELICOPTER CRATED FOR EXPORT

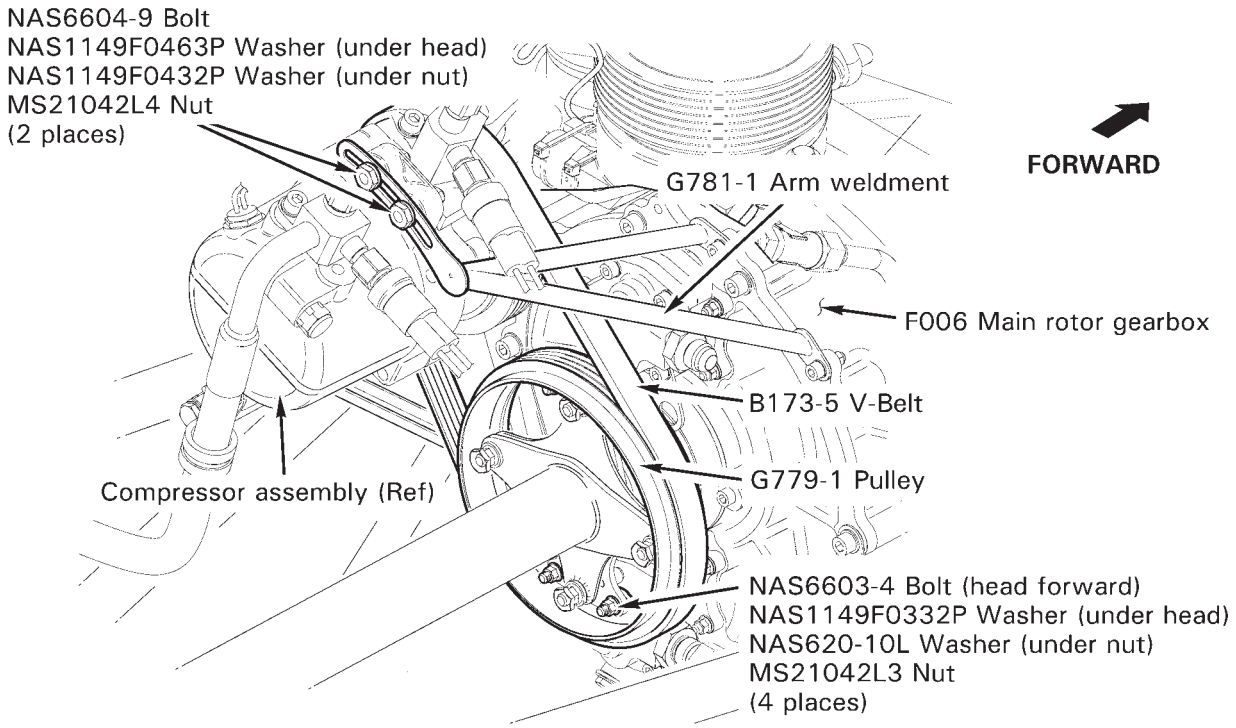

FIGURE 1-2 ASSEMBLY INSTRUCTIONS FOR R66 HELICOPTER CRATED FOR EXPORT

1-80 Assembly Instructions for R66 Helicopter Crated for Export (continued)

10. For air-conditioned ships:

    a. Refer to Figure 1-1. Remove shipping supports (ty-raps, foam, tape, etc.) from G777-1 compressor assembly. Install hardware securing G782-1 mount weldment to main rotor gearbox. Standard torque hardware per § 20-32 and torque stripe per Figure 5-1. Hook B774-3 spring in drilled hole of NAS1352-4H14 screw. Verify security.

    b. Refer to Figures 1-1 and 1-2. Verify B173-5 v-belt is in good condition. Fit belt around G779-1 pulley and compressor pulley, and install hardware securing compressor to G782-1 mount weldment. Standard torque bolts per § 20-32.

    c. Refer to Figure 1-2. Install hardware securing compressor to G781-1 arm weldment. Rotate compressor up and outboard to tension belt, then tighten hardware securing compressor to weldment. Verify belt is properly aligned on both pulleys. Adjust belt tension until 4.5-5.5 lb of force applied mid-span deflects belt 0.16-inch. Standard torque bolts per § 20-32.

    d. Connect compressor assembly wiring to airframe harness at connectors and install ty-raps as required. Cinch ty-raps until snug without over-tightening, and trim tips flush with heads.

11. Refer to IPC Figure 79-1. Remove F237-1 tailcone frame weldment and F305-5 (aft) inlet. Install tail rotor drive fan shaft (fanwheel installed) through scroll assembly. Install hardware securing aft inlet to scroll assembly. Verify security.

12. Refer to IPC Figure 65-1. Install hardware securing C947-3 plate assembly to F908-1 yoke and tail rotor drive fan shaft. Standard torque bolts and palnuts per § 20-32 and torque stripe per Figure 5-1.

13. Remove shipping supports (ty-raps, foam, tape, etc.) from tailcone assembly, and install tailcone per Section 53-40 steps 1 thru 7. Install strobe light. Install communication and GPS antennas (if equipped).

14. Install empennage assembly per § 53-50. Install aux stabilizer assembly per § 53-52.

15. Service tail rotor gearbox per § 12-21. Service main rotor gearbox per § 12-11.

16. Remove hydraulic reservoir shipping plug. Install D487-3 vent assembly, special torque vent to 100 in.-lb, and torque stripe per § Figure 5-1 (do not safety wire).

17. Install tail rotor assembly per § 64-10. Match color-coded markings on blades with pitch links.

18. Install main rotor blades per § 62-10. Match color-coded markings on blades with markings on hub and pitch links.

19. Inside engine compartment, remove anti-ice valve cap, starter-generator cap, inducer bleed hose cover, exhaust pipe cover and desiccant, and combustion case drain valve cap. Connect inducer bleed hose to box assembly and tighten clamp. Verify security.

1-80 Assembly Instructions for R66 Helicopter Crated for Export (continued)

20. If ship is equipped with attitude horizon, directional gyro, turn coordinator, and/or vertical card magnetic compass:

A. Attitude Horizon, Directional Gyro, and Turn Coordinator Installation

> **CAUTION**
>
> Directional gyro mount screws must not exceed 1-inch in length.

1. Place a piece of foam under instrument face. Remove (6) screws securing face to console and gently pull face forward. Remove hardware securing instrument hole covers to face and remove covers. Install instruments and secure to face with hardware provided.

2. Connect straight connector(s) to directional gyro and/or turn coordinator. Connect angle connector to attitude horizon, ensuring strain relief points down. Ensure connectors lock. Ty-rap excess wiring. Install screws securing instrument face to console.

B. Vertical Card Magnetic Compass Installation

1. Locate airframe wiring (in windshield center bow), install 2-inch length of B158-3 heat shrink over wiring, and connect compass pins to airframe sockets (polarity is not critical). Slide heat shrink over connection and apply heat. Install (4) screws securing compass to mount, securing wiring atop compass.

21. Connect battery per § 96-10.

> NOTE
>
> Check battery open circuit voltage and perform boost charging or capacity tests as required per Concorde Battery Instructions for Continued Airworthiness.

22. Perform pitot-static leak check per § 95-10.

23. Install Emergency Locator Transmitter (ELT) per § 25-61, as required. Install tailcone cowling assembly per § 53-23.

24. Install fire extinguisher per § 25-62, as required.

25. Fuel helicopter per § 12-41.

26. Verify all shipping supports (ty-raps, foam, tape etc.) have been removed from helicopter. Refer to § 6-70. Secure access panels and inspection doors.

> NOTE
>
> Flight checks to be performed by a qualified pilot and certificated mechanic.

27. Perform ground check per § 5-41 steps 2 thru 9.

1-80 Assembly Instructions for R66 Helicopter Crated for Export (continued)

28. Depreserve the engine after storage per RR300 Series Operation and Maintenance Manual (OMM). Install starter-generator cooling hose. Install engine cowling per § 53-21.

29. Install tail rotor dynamic balance equipment per § 18-21.

30. Perform run-up per § 5-42 steps 2 thru 16.

31. Perform tail rotor dynamic balance per § 18-20.

32. Remove tail rotor dynamic balance equipment. Install main rotor balance equipment per § 18-11.

CAUTION

Mast fairing, cowlings, and panels must be installed for flight.

33. Perform hover checks per § 5-43 step 1. DO NOT proceed into forward flight.

34. Track and balance main rotor per § 18-12.

35. While climbing at maximum continuous torque, 60 KIAS:

    a. Evaluate vibration level and controllability.

    b. Perform momentary 30° left yaw to check for adequate directional control.

36. Level flight at 2000 feet density altitude (deviate as required for weather and terrain), maximum continuous torque:

    a. Evaluate longitudinal and lateral cyclic control forces.

    b. Evaluate collective control forces.

37. Evaluate vibration level at maximum continuous torque and straight-and-level flight.

38. During autorotation at 50 KIAS and 90% rotor RPM, perform momentary 30° right yaw to check for adequate directional control.

39. Check all instruments, gages, and avionics for proper operation.

Intentionally Blank

CHAPTER 4

AIRWORTHINESS LIMITATIONS

Section	Title	Page
4-10	Airworthiness Limitations	4.1
4-20	Additional Limitations	4.3
4-21	Parts with a Recommended Time Between Overhauls (TBO)	4.3
4-22	Parts with a Recommended Replacement Time	4.3
4-23	Airframe and Engine Accessory Limits	4.4A
4-24	Engine Limits	4.4A
4-30	Type Certificate Data Sheet (TCDS)	4.4A

Intentionally Blank

4-10 Airworthiness Limitations

The Airworthiness Limitations Section is FAA approved and specifies inspections and other maintenance required under 14 CFR §§ 43.16 and 91.403, unless an alternative program has been FAA approved.

A. Fatigue Life-Limited Parts

Part Number	*Description*	*Maximum Service Life*
C023-21, -34, & -35	Tailcone Assembly	2000 Hours
C044-1	Horizontal Stabilizer	2000 Hours
C154-1	Main Rotor Hub	2000 Hours
C158-1	Main Rotor Spindle	2000 Hours
C251-3	Main Rotor Shaft	2000 Hours
C545-1	Gear Set, Tail Gearbox	2000 Hours
C647-12	Bearing Set, Swashplate	2000 Hours
D079-1	Tail Rotor Guard	2000 Hours
D196-1	Tail Rotor Drive Shaft	2000 Hours
F016-2	Main Rotor Blade	2000 Hours or 12 years*
F020-1	Upper Frame	2000 Hours
F029-1	Tail Rotor Blade	2000 Hours or 12 years*
F143-1	Pinion, Main Gearbox	2000 Hours
F146-1	Pinion, Main Gearbox	2000 Hours
F195-1	Yoke, Tail Rotor Drive Shaft	2000 Hours
F235-13	Strut, Upper Frame	2000 Hours
F252-1	Strut, Upper Frame	2000 Hours
F263-1	Housing, Main Gearbox	2000 Hours
F270-1	Cartridge, Main Gearbox	2000 Hours
G062-2	Tail Rotor Hub	2000 Hours
G201-1	Frame, Servo Support	2000 Hours

* Whichever limit occurs first.

Approved By: _____ Date: 7/11/11

for Manager, Federal Aviation Administration
Los Angeles Aircraft Certification Office

FAA Approved: This page constitutes the Airworthiness Limitations Section in its entirety, is considered segregated from the rest of the document, and sets forth the FAA approved mandatory replacement times for the fatigue life-limited parts listed above.

Intentionally Blank

4-20 Additional Limitations

4-21 Parts with a Recommended Time Between Overhauls (TBO)

Remove the following components for overhaul when they have accumulated 2000 hours time in service since new or since last overhaul. Maintenance procedures are listed for reference and are subject to revision.

Part Number	Description	Reference
C005-13	Main Rotor Blade & Spindle Assembly	MM § 62-10 & IPC Figure 62-1
F006-1	Main Rotor Gearbox Assembly	MM § 63-20 & IPC Figure 63-3
C017-6	Swashplate Assembly	MM § 67-40 & IPC Figure 62-5
F018-1	Clutch Assembly	MM § 63-12 & IPC Figure 63-1
C021-1	Tail Rotor Gearbox Assembly	MM § 65-40 & IPC Figure 65-9
C649-4	Oil Cooler	MM § 79-30 & IPC Figure 63-15
D211-3	Hydraulic Reservoir Assembly	MM § 67-52 & IPC Figure 67-25
D212-5, -6	Hydraulic Servo Assembly	MM § 67-53 & IPC Figures 67-29 & 67-33
D500-2, -3	Pump Assembly	MM § 67-51 & IPC Figure 63-3
F649-1	Oil Cooler	MM § 79-30 & IPC Figure 79-7

4-22 Parts with a Recommended Replacement Time

Remove the following components when they have accumulated 2000 hours time in service since new. Maintenance procedures are listed for reference and are subject to revision.

Part Number	Description	Reference
A120-5	Bellcrank	MM § 67-65 & IPC Figure 65-9
A215-015	O-Ring	MM § 28-11 & IPC Figure 28-1
A522-10	Control Cable	MM § 76-12 & IPC Figure 76-1
A522-11	Control Cable	MM § 28-31 & IPC Figure 28-9
A522-14	Control Cable	MM § 21-31 & IPC Figure 21-31
A729-68	Tube	MM § 71-30 & IPC Figure 71-13
A785-37	Hose	MM § 71-10 & IPC Figure 75-1
A785-38	Hose	MM § 71-41 & IPC Figure 71-15
A918-5	Elastic Cord	MM § 5-43 & IPC Figure 67-41
A947-2	Plate Assembly	MM § 63-10 & IPC Figure 63-1
B173-5	V-Belt	MM § 21-21 & IPC Figure 21-3
B277-12	Clamp	MM § 21-30 & IPC Figure 21-33
B345-4	Pitch Link	MM §§ 64-10 & 67-62 & IPC Figure 64-1
C031-1	Tail Rotor Pitch Control Assembly	MM § 67-62 & IPC Figure 65-9
C119-2	Bumper	MM § 64-10 & IPC Figure 64-1
C152-1	Thrust Washer	MM §§ 62-10 & 62-20 & IPC Figure 62-3
C189-14	Nut	MM §§ 62-10 & 62-20 & IPC Figure 62-3
C522-10	Control Cable	MM § 76-11 & IPC Figure 76-1

4-22 Parts with a Recommended Replacement Time (continued)

Part Number	Description	Reference
C522-11	Control Cable	MM § 76-21 & IPC Figure 76-5
C947-3	Plate Assembly	MM § 65-10 & IPC Figure 65-1
D082-1	Tube Assembly	MM § 53-53 & IPC Figure 53-21
D224	Tail Rotor Drive Shaft Assembly	MM § 65-20 & IPC Figure 65-3
D918-1	Elastic Cord	MM § 67-10 & IPC Figures 67-1 & 67-5
D918-2	Elastic Cord	MM § 67-10 & IPC Figures 67-1 & 67-5
D918-3	Elastic Cord	MM § 67-10 & IPC Figures 67-1 & 67-5
D930-2	Safety Spring	MM § 76-10 & IPC Figure 76-1
F170-2	Fitting	MM § 71-30 & IPC Figure 71-13
F173-1	Strut	MM § 71-30 & IPC Figure 71-13
F579-1	Seal	MM § 71-23 & IPC Figure 71-11
F642-6, -7	Engine Shaft Weldment	MM § 63-10 & IPC Figure 63-1
F651-2	Element	MM § 12-12 & IPC Figure 63-13
F651-3	Seal Kit	MM § 12-12 & IPC Figure 63-13
F771-1	Filter	MM § 71-21 & IPC Figure 71-9
F792-1	Dual Tachometer	MM § 95-23 & IPC Figure 95-1
G727-1	Tube	MM § 71-30 & IPC Figure 71-13
G732-3	Cap	MM § 63-12 & IPC Figure 63-1
MS21919WCH12	Clamp	MM § 71-30 & IPC Figure 71-13
MS24665-423	Cotter Pin	MM § 62-10 & IPC Figure 62-3
MS28778-4	Packing	MM § 79-30 & IPC Figure 79-7
MS28778-8	Packing	MM § 79-30 & IPC Figure 79-7
MS29512-10	Packing	MM § 28-11 & IPC Figure 28-1
NAS557-32A	Grommet	MM § 63-12 & IPC Figure 63-1
NAS617-12	Packing	MM § 71-30 & IPC Figure 71-13
NAS634-105	Bolt	MM § 62-10 & IPC Figure 62-3
NAS6604-67	Bolt	MM § 63-12 & IPC Figure 63-1

4-23 Airframe and Engine Accessory Limits

Refer to accessory manufacturer's instructions for continued airworthiness for accessory limits. Remove accessories per R66 Maintenance Manual or RR300 Operation and Maintenance Manual (OMM) as required.

4-24 Engine Limits

Refer to RR300 Operation and Maintenance Manual (OMM) for engine limits. Prepare engine for Rolls-Royce maintenance facility per § 71-11 as required.

4-30 Type Certificate Data Sheet (TCDS)

The Robinson R66 Type Certficate Data Sheet (TCDS) reprinted on the following pages is subject to revision.

Visit the FAA Aircraft Certification Regulatory and Guidance Library online databases for TCDS revision status at: http://rgl.faa.gov.

Intentionally Blank

DEPARTMENT OF TRANSPORTATION
FEDERAL AVIATION ADMINISTRATION

R00015LA
Revision 2
Robinson
R66
March 10, 2015

TYPE CERTIFICATE DATA SHEET NO. R00015LA

This data sheet, which is a part of Type Certificate No. R00015LA, prescribes conditions and limitations under which the product for which the type certificate was issued meets the airworthiness requirements of Title 14, Code of Federal Regulations.

Type Certificate Holder: Robinson Helicopter Company
2901 Airport Drive
Torrance, California 90505

I. Model R66 (Normal Category Rotorcraft), Approved October 25, 2010

Engine: One Rolls-Royce 250-C300/A1, Type Certificate number E4CE

Fuel:
Jet A or Jet A-1 conforming to ASTM D 1655
Jet B conforming to ASTM D 6615
JP-4 or JP-5 conforming to MIL-DTL-5624
JP-8 conforming to MIL-DTL-83133

Engine Limits:

Power Ratings at N_2 speed of 6016 rpm (100% rpm):
Maximum continuous: 224 hp (83% Torque)
Takeoff (5 minute): 270 hp (100% Torque)

Maximum speeds:
Output shaft (N_2): 101% (6076 rpm)
Gas producer shaft (N_1): 105% (53519 rpm)

Maximum Measured gas temperature:
During start: 927° C (10 second limit above 810°C)
5 minute during operation: 782° C
Continuous during operation: 706° C

Rotor Speed Limits

Condition	Minimum		Maximum	
	(rpm*)	(%)	(rpm*)	(%)
Power On	404	99	412	101
Power Off	359	88	432	106

* Main Rotor

Transmission Torque Limits

Rating	Max Torque at 100% N_2	
	(ft-lb)	(%)
Takeoff (5 min)	236	100
Max Continuous	196	83

Page No.	1	2	3	4	5
Rev. No.	2	2	2	2	1

Airspeed Limits

Takeoff Gross Weight or Configuration	Power On V_{NE} (KIAS)	Power Off V_{NE} (KIAS)
Less than 2200 lb	140	100
2200 lb to 2700 lb Or Police Version* (any Gross Weight) Or Pop-out Floats* (Floats Stowed, any Gross Weight)	130	100

Sea level V_{NE} values shown above. For reduction of V_{NE} with altitude and temperature, see R66 Pilot's Operating Handbook and FAA Approved Rotorcraft Flight Manual (RTR 661).

Airspeed limit is 65 KIAS for power settings above 83% torque.

Airspeed limit with inflated pop-out floats is 80 KIAS.

Airspeed limit is 100 KIAS for any combination of doors off.

Center of Gravity (C.G.) Range

Gross Weight (lb)	Longitudinal C.G. Forward Limit (in)	Longitudinal C.G. Aft Limit (in)
1400	91.0	102.5
2300		102.5
2500	91.0	
2700	92.0	98.0

Longitudinal C.G. (in)	Lateral C.G. Left Limit (in)	Lateral C.G. Right Limit (in)
91.0	-3.5	+3.5
100.0	-3.5	+3.5
102.5	-1.5	+1.5

Notes:

1. Straight line variation between points shown
2. Lateral C.G. limits valid for all gross weights

Empty Weight C.G. Range

None. The aircraft's empty weight and empty weight C.G. must be determined by the procedures in Section 8 of the R66 Maintenance Manual, RTR 660.

Datum

100 inches forward of main rotor centerline.

Leveling Means

For weight and balance: Level placed laterally and longitudinally on aft tunnel cover immediately forward of aft middle seat. If cover is not straight, use keel panel upper flanges, accessed by removing aft tunnel cover.

For rigging: Level placed on top of main rotor hub parallel with teeter bolt. Main rotor blades are aligned fore-aft for lateral levelling, and teeter bolt is aligned fore-aft for longitudinal levelling.

Maximum Weight

2700 lb

Minimum Crew

1 pilot in forward right seat.

Number of Seats

5 (4 for Police Version)

Seat Locations

Pilot and forward occupant at STA 49.0 in
Aft outboard occupants at STA 80.0 in
Aft center occupant at STA 78.0 in

Maximum Compartment Weights

Main baggage compartment
Maximum weight is 300 lb at STA 107.0 in
Maximum loading density is 50 lb/ft^2

Underseat baggage compartments
Forward seats – Maximum weight is 50 lb at STA 42.0 in
Rear seats – Maximum weight is 50 lb at STA 82.0 in

Note: For any seat location, the maximum combined weight of the load on the seat (e.g., occupant) plus the weight of stowed items and any installed equipment in the underseat baggage compartment is 300 lb.

Fuel Capacity

Fuel tank capacity is 74.6 U.S. gallons
Usable fuel quantity is 73.6 U.S. gallons at STA 102.5 in
Note: Aircraft empty weight includes 1.0 U.S. gallon of unusable fuel.

Oil Capacities

Component	Capacity (qt)	STA (in)
Engine	6	126.0
Main Rotor Transmission	2	100.0
Tail Rotor Transmission	0.11	327.0
Hydraulic Reservoir	0.65	110.8

Maximum Operating Altitude

14,000 feet Density Altitude.
Maximum altitude above ground level is 9,000 ft.

Rotor Blade and Control Movements

Main Rotor Blades

Collective Pitch	13.0° ±0.5° total travel	
Cyclic Pitch	Forward	13.50° to 14.25°
	Aft	13.50° to 14.25°
	Left	7.5° to 8.5°
	Right	6.0° to 7.0°

Note: Collective low pitch to be established in accordance with the Maintenance Manual and Instructions for Continued Airworthiness (RTR 660) procedures to obtain proper autorotation RPM.

Tail Rotor Blades

Collective Pitch	Full right pedal	15.5° to 16.5°
	Full left pedal	8.5° to 19.0°

All blade angles measured at 75% radius

Manufacturer's Serial Numbers

0002 and subsequent.

Certification Basis

14 CFR part 27, dated February 1, 1965, as amended by Amendment 27-1 through Amendment 27-44.

Equivalent Safety Finding:
Number AT14992LA-R-S-1

RHC Note: Tail rotor blades collective pitch full left pedal should be "18.5° to 19.0°".

14 CFR part 27.695(a)(1), Power boost and power-operated control system. (see Note 7)

Special Condition:
No. 27-035-SC Robinson Model R66 Helicopter, Sec. 27.1309, Installation of HeliSAS Autopilot and Stabilization Augmentation System (AP/SAS).

14 CFR Part 36, dated December 1, 1969, as amended by Amendment 36-1 through Amendment 36-28.

Compliance with the ditching requirements of § 27.801 was not demonstrated.

Compliance with the ice protection requirements of § 27.1419 was not demonstrated.

The R66 is approved for day and night VFR operations only.

TC Application Date: September 06, 2006.

TC Issue Date: October 25, 2010.

Production Basis — Production Certificate No. 424WE dated October 25, 2010.

Equipment — The basic required equipment as prescribed in the applicable airworthiness regulations (see Certification Basis) must be installed in the aircraft for certification. In addition, the following FAA-approved Rotorcraft Flight Manual is required:

R66 Pilot's Operating Handbook and FAA Approved Rotorcraft Flight Manual (RTR 661), dated October 25, 2010, or later approved revision.

GENERAL NOTES

NOTE 1. A current weight and balance report, including a list of equipment included in the certificated empty weight, and loading instructions when necessary, must be provided for each aircraft at the time of original airworthiness certification and at all times thereafter, except in the case of operators having an approved weight control system.

NOTE 2. The following placard must be installed in clear view of the pilot:

"THIS ROTORCRAFT APPROVED FOR DAY AND NIGHT VFR OPERATIONS"

For additional placards, see the Rotorcraft Flight Manual. All placards required in the Rotorcraft Flight Manual must be installed in the appropriate locations.

NOTE 3. Information essential to the proper maintenance of the helicopter, including retirement time of critical components, is contained in the Robinson R66 Maintenance Manual and Instructions for Continued Airworthiness (RTR 660). Retirement times are listed in the "AIRWORTHINESS LIMITATIONS" section.

NOTE 4. Deleted as of March 10, 2015.

NOTE 5. Any cockpit instruments installed by a 3rd party must be marked with limit markings and range markings in accordance with Robinson's marking scheme.

NOTE 6. Deleted as of March 10, 2015.

NOTE 7. Exemption No. 9589, dated January 28, 2008, has been removed since Robinson Helicopter Company was granted an Equivalent Level of Safety (ELOS) finding to CFR §27.695(a)(1), Number AT14992LA-R-S-1, dated February 20, 2013. The exemption allowed a powered flight control system without considering the jamming of a control valve as a possible single failure. There is no impact to R66 helicopters that have been delivered or are in service.

--- END ---

Intentionally Blank

CHAPTER 5

INSPECTIONS

Section	Title	Page
5-10	Life-Limited Components	5.1
5-11	Time-In-Service Records	5.1
5-12	Retirement Procedure	5.1
5-20	Scheduled Maintenance and Inspections	5.3
5-30	Standard Inspection Criteria	5.5
5-31	Ball and Roller Bearings	5.5
5-32	Push-Pull Tubes	5.5
5-33	Rod Ends and Spherical Bearings	5.5
5-34	Elastomeric Bearings	5.7
5-35	Telatemp Indicators	5.7
5-40	Operation Checks for 100-Hour / Annual Inspection	5.8
5-41	Ground Check	5.8
5-42	Run-Up	5.10
5-43	Flight Check	5.11
5-45	100-Hour / Annual Maintenance and Inspection	5.13
5-50	2000-Hour Maintenance and Inspection	5.39
5-55	12-Year Maintenance and Inspection	5.39
5-60	Special Maintenance and Inspections	5.41
5-61	Tail Skid Strike	5.41
5-62	Tail Rotor Strike	5.42
5-63	Main Rotor Strike	5.43
5-64	Rotor/Engine Overspeed	5.44
5-65	Hard Landing	5.47
5-66	Dye Penetrant Inspection of F020-1 Upper Frame	5.48
5-67	Corrosion on F020-1 Upper Frame	5.48
5-68	Main Rotor Gearbox Overtemp Illumination	5.48
5-69	Main Rotor Gearbox (MR) Chip Light Illumination	5.49
5-70	Tail Rotor Gearbox (TR) Chip Light Illumination	5.49
5-71	Main Rotor Gearbox Filter Bypass Indicator	5.49
5-72	Lightning Strike	5.50
5-73	Pop-Out Float-Equipped Helicopter Water Landing with Tail Rotor Contact	5.50

Intentionally Blank

CHAPTER 5

INSPECTIONS

5-10 Life-Limited Components

5-11 Time-In-Service Records

It is the operator's responsibility to maintain a record of time in service for the engine, airframe, and all life-limited components, as well as the number of start cycles for the engine. Two hourmeters are provided: the hourmeter on the console records all run time including ground idle and is provided for reference. The hourmeter located outboard of the pilot's seat is collective-activated and records run time only when the collective is raised off the down stop. Both hourmeters are connected to main rotor gearbox oil-pressure switch. The collective-activated hourmeter may be used to determine time in service for maintenance purposes, including time in service for all life-limited components.

Calendar life begins on the date of the factory-issued airworthiness certificate or factory-issued authorized release certificate (FAA Form 8130-3, Airworthiness Approval Tag).

Engine life is limited by engine time in service and accumulated start cycles. The engine is equipped with an electronic Engine Monitoring Unit (EMU), which may be used to verify time in service and accumulated start cycles. An official, independent record of start cycles must be maintained by the operator.

When a life-limited replacement part or overhauled component is installed in the helicopter, record the part name, part number, serial number, and previous time in service in the aircraft maintenance record, including the installation date and helicopter total time. Previous time in service must be included when calculating remaining component life or time between overhaul (TBO).

CAUTION

Components with mandatory overhaul times or life-limits whose time in service is not reliably documented cannot be considered airworthy and must be removed from service.

If a part is fatigue life-limited or has a mandatory overhaul requirement and is interchanged between an R44 and an R66 helicopter, and if the part life-limit or overhaul requirement is different between an R44 and an R66 helicopter, the shorter life-limit or overhaul requirement must be used. If a part is fatigue life-limited or has a mandatory overhaul requirement, and the accumulated cycles and/or time in service are known but the helicopter type is unknown, the shorter life-limit or overhaul requirement must be used.

5-12 Retirement Procedure

The FAA-approved Airworthiness Limitations section in Chapter 4 lists the mandatory replacement time for affected components. Life-limited components must be removed from the helicopter at specified intervals and permanently retired from service by destroying or damaging each part beyond repair or beyond appearance of serviceable condition.

TABLE 1 SCHEDULED INSPECTIONS	First 100 Hours*	100 Hours**	200 Hours**	300 Hours**	400 Hours**	600 Hours**	2000 Hours**	Annually***	12 Months**	24 Months**	1 Year**	3 Years**	5 Years**	12 Years**	15 Years**	3000 Cycles**
Replace main gearbox oil filter per § 12-12.	●					●										
Perform 100-hour / annual inspection per § 5-45.		●						●								
As required by RR300 Series Operation and Maintenance Manual (OMM), perform maintenance and inspection.			●		●		●		●							●
Service inlet barrier filter per § 71-21.				●							●					
Replace main gearbox oil per § 12-12.						●										
Drain and flush tail rotor gearbox per § 12-23.						●										
Replace hydraulic filter per § 12-32.						●										
Clean gearbox chip detectors per § 12-13 & 12-22.						●		●								
Perform 2000-hour maintenance and inspection per § 5-50.							●									
Inspect emergency locator transmitter (ELT) per 14 CFR § 91.207.									●							
Perform pop-out float leak check per § 32-64 Part A.									●							
Test and inspect transponder per 14 CFR § 91.413.										●						
Perform pop-out float inflation check per § 32-64 Part B.												●				
Peform pop-out float pressure cylinder hydrostatic test.													●			
Perform 12-year maintenance and inspection per § 5-55.														●		
Pop-out float pressure cylinder maximum life.															●	

* One-time maintenance after new or overhauled main rotor gearbox is installed.

** Recurring inspection not to exceed given interval.

*** See § 1-60 Definitions and Abbreviations.

5-20 Scheduled Maintenance and Inspections

The R66 helicopter required inspection intervals are given in Table 5-1. Required inspection intervals are maximum 100 hours time in service or 12 calendar months, whichever occurs first; the inspection interval may be extended up to 10 hours, without accumulation, if allowed by local regulations.

Some aircraft will reach calendar intervals before accumulating the associated service time. Unless noted, use the more conservative inspection interval. Refer to § 5-45 for inspection procedures.

Some aircraft may require maintenance and inspections in addition to the requirements in Table 5-1. Consult aircraft maintenance records, Service Bulletins (SB), aviation regulations, Airworthiness Limitations, and Airworthiness Directives (AD) for applicability.

Preventive maintenance is required between scheduled inspections. Fluid leaks, discoloration, fretting, galling, chafing, nicks, scratches, dents, cracks, and corrosion all warrant further investigation. Unairworthy items must be replaced or repaired as allowed by RHC.

NOTE

FOR MAXIMUM ROD EXTENSION WHEN NO WITNESS HOLE IS PROVIDED:

ROD END	ℓmax
A101-4	1.10 in.
D163-1	1.40 in.
D173-1	1.30 in.

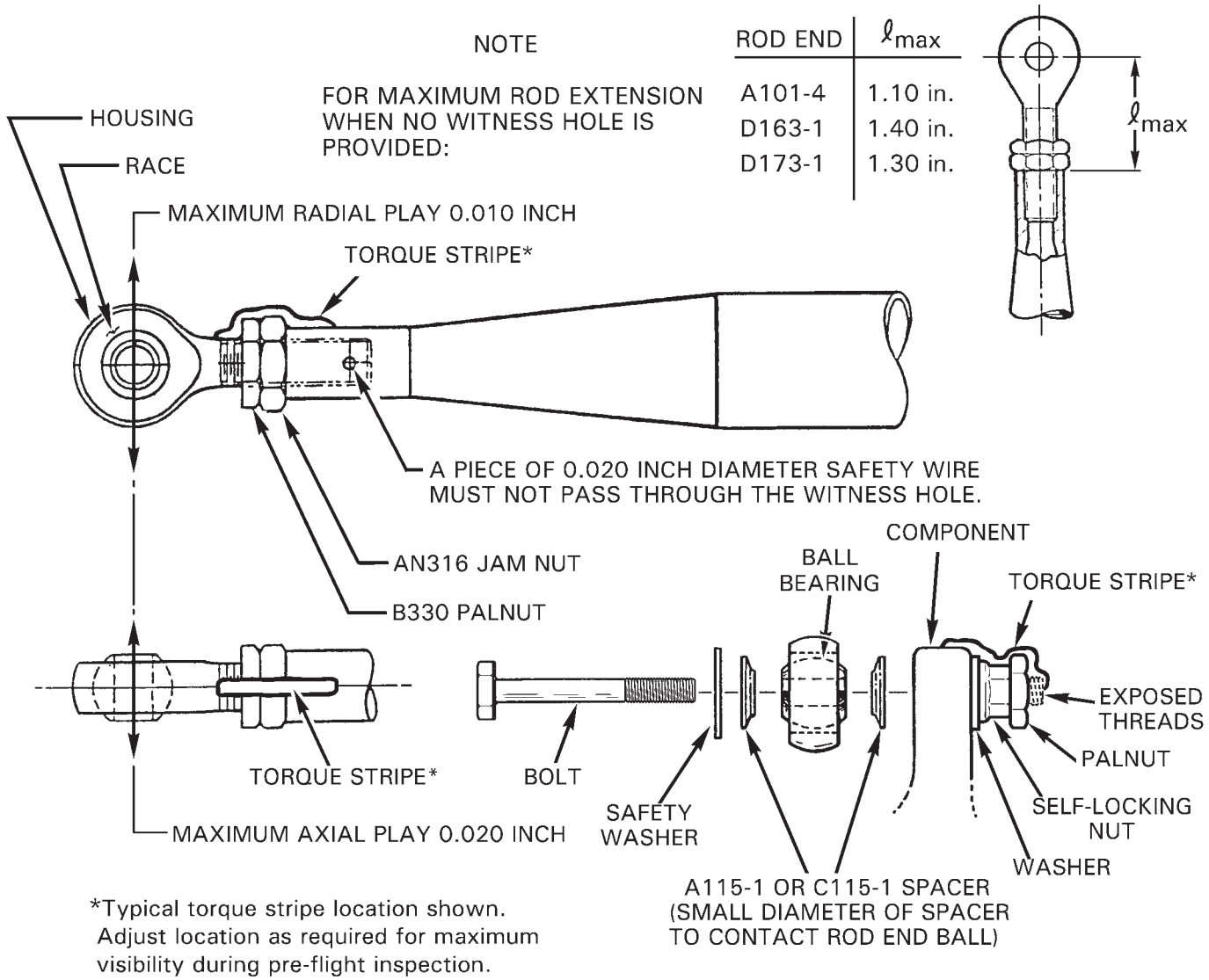

FIGURE 5-1 ROD END AND SPHERICAL BEARING PLAY LIMITS AND TORQUE STRIPE APPLICATION

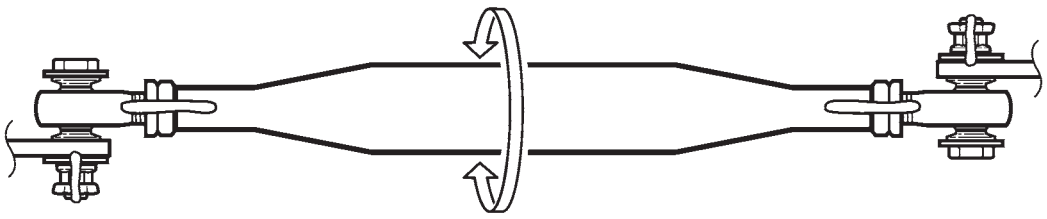

Position rod ends for maximum rotation

FIGURE 5-2 ROD END CENTERING

5-30 Standard Inspection Criteria

This section contains standard inspection criteria for 100-hour/annual maintenance and inspection.

5-31 Ball and Roller Bearings

The first indication of bearing failure is usually an increase in bearing noise. Noise will almost always start several hours prior to bearing failure. Listen to drive system during start-up and shutdown. A failing bearing will produce a loud whine, rumble, growl, or siren sound. Upon hearing an unusual noise, thoroughly inspect all bearings before further flight.

A failing bearing may have a distorted seal or be exuding a large amount of grease. Monitor bearings for increase in temperature, but do not rely on Telatemps to detect failing bearings as temperature increase may occur only seconds before bearing disintegrates.

5-32 Push-Pull Tubes

1. Nicks, cuts, or scratches in tube not more than 0.010 inch deep and not more than 1/4 of tube circumference may be polished out in lengthwise direction using 320-grit or finer wet-or-dry abrasive paper to 1 inch minimum blend radius. Replace push-pull tube if depth exceeds these limits.

2. Replace push-pull tube if tube is dented or flattened more than 5% of its diameter in unswaged area; dents or flattening is not permitted in swaged (tapered and threaded) ends of tubes.

5-33 Rod Ends and Spherical Bearings

1. Maximum axial play: 0.020 inch
   Maximum radial play: 0.010 inch

2. Looseness between bearing outer race and rod end housing is not permitted.

3. Rod ends not riveted in place must block passage of 0.020-inch diameter wire through witness hole. Refer to Figure 5-1 for maximum rod end extension when no witness hole is provided.

4. Rod end jam nuts and palnuts must be torqued per Section 20-32 and torque striped per Figure 5-1 at the most visible position for pre-flight inspection. Torque stripe must extend across nuts to both rod end shank and push-pull tube (or pitch link barrel, yoke, support, strut, etc.). Torque stripes are subject to deterioration and must be periodically renewed.

5. Refer to Figure 5-2. Rod ends must be centered, or positioned, to allow as much push-pull tube or link rotational movement as possible without binding.

CAUTION

Teflon-lined bearings must not be lubricated or solvent cleaned.

WARNING

Assembly of flight controls is critical and requires inspection by a qualified person. If a second person is not available, RHC recommends the installer take a 5-minute break prior to inspecting flight control connections he has assembled.

Elastomer Fatigue

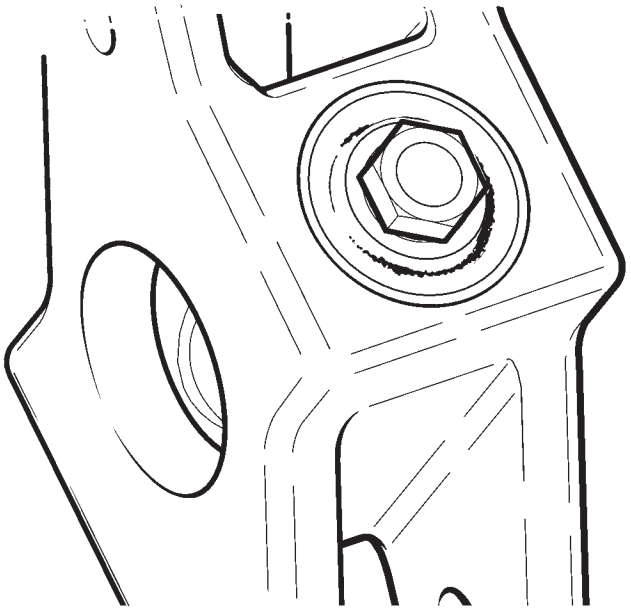

Elastomer Oil Contamination

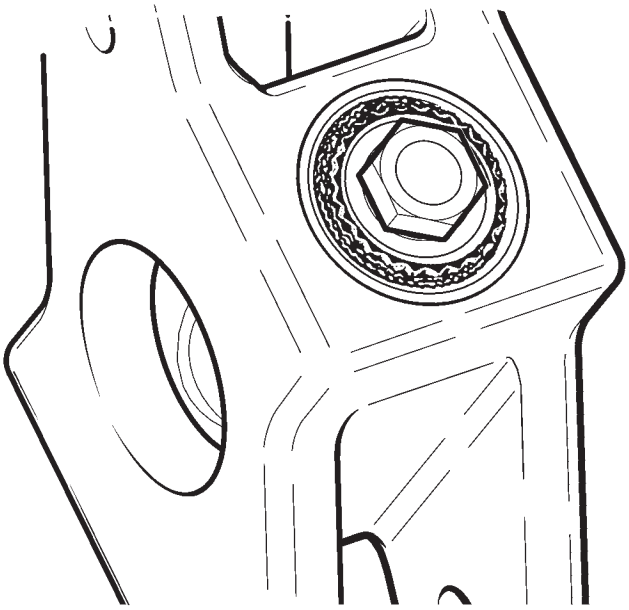

Elastomer Overload

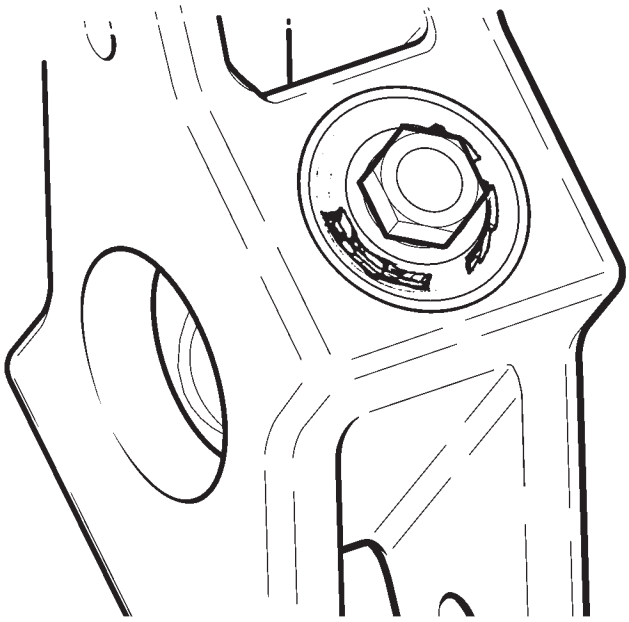

FIGURE 5-3 ELASTOMERIC BEARING DAMAGE

5-34 Elastomeric Bearings

Refer to Figure 5-3. Elastomeric bearings are used in the G062-1 tail rotor hub. Fatigue, oil contamination, or overload can degrade the elastomer.

Small surface cracks (fatigue cracks) and elastomer dust or “eraser crumbs” are normal and are not cause for replacement. As cracks grow, enough elastomer will be lost to cause reduced stiffness and increased vibration. Replace bearing if crack is deeper than 0.10 inch or cracks are present over more than 25% of elastomer face.

Avoid elastomer exposure to oil, grease, hydraulic fluid, cleaning solvent, and rust-preventative fluids. Immediately wash off contaminants with detergent and water. Replace a contaminated bearing that exhibits swelling, wavy edges, or debonding.

Overload occurs when elastomer’s tensile strength or rubber-to-metal bond strength is exceeded. This can occur when normal loads are applied to a bearing weakened by fatigue or oil contamination. Overload is indicated by large clean cracks or extrusions from elastomer.

Elastomer may also separate (debond) from metal bushings. Replace bearing if separation exceeds 25% of bonded area.

5-35 Telatemp Indicators

Refer to Figure 5-4. Self-adhesive Telatemp indicators record increases in operating temperatures of the hydraulic pump and tail rotor gearbox. To use a Telatemp, draw a reference line between the highest temperature square which has darkened during normal operation and the next undarkened square. During every check thereafter, determine if an additional block has blackened. If an indicated temperature increase cannot be accounted for by a change in operating conditions, subject component should be carefully examined before further flight. If no reference line is detectable and/or all indicator blocks are compromised, carefully examine part before further flight and replace Teletemp (after first flight, draw a reference line as described above).

Part Number	Temperature Range		
110-2	60°C / 140°F	—	88°C / 190°F
110-3	82°C / 180°F	—	110°C / 230°F
110-4	104°C / 220°F	—	132°C / 270°F

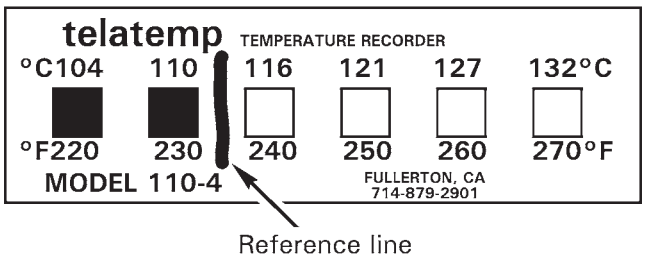

FIGURE 5-4 TELATEMP WITH DRAWN REFERENCE LINE

5-40 Operation Checks for 100-Hour / Annual Inspection

Complete the following checklists in conjunction with 100-hour / annual inspection. Note and correct any discrepancies.

5-41 Ground Check (aircraft not running)

1. _____ **Twist Grip:**
   Verify twist grip smooth rotation without binding in full up and full down collective position. Verify over center spring holds twist grip full open or closed.

2. _____ **Fuel Cutoff Valve:**
   Verify smooth actuation without binding. Verify proper function of lock button.

3. _____ **Collective Control:**
   Verify proper operation through full control travel with and without friction applied. With friction off, verify approximately one-half inch total free play before encountering hydraulic resistance. Verify normal hydraulic resistance throughout remainder of control travel. With friction on, verify increased resistance but no binding or locking of control. Verify power turbine governor rigging as follows:

   a. _____ Turn battery switch on. With collective full down, hold beep switch actuator all the way down. Have a second person verify the PTG reads approximately 45°.

   b. _____ With collective full down, hold beep switch actuator all the way up. Have a second person verify the PTG reads approximately 65°. Return actuator to nominal position. Turn battery switch off.

4. _____ **Cyclic Control:**
   With friction off, verify approximately one-half inch total longitudinal and one inch total lateral free play before encountering hydraulic resistance. Verify normal hydraulic resistance throughout remainder of control travel. With friction on, verify increased resistance but no binding or locking of control.

5. _____ **Tail Rotor Pedals:**
   Verify smooth actuation without binding. Verify proper pedal position for pilot and locking pin security.

6. _____ **Removable Controls (if installed):**
   Verify proper operation and locking pin security.

5-41 Ground Check (continued)

8. _____ **Lighting and Instruments:** (Turn battery switch on.)

ANNUNCIATOR PANEL

a. _____ Main rotor gearbox temperature / pressure segment illuminates.

b. _____ Engine oil segment illuminates.

c. _____ Generator segment illuminates.

d. _____ Rotor brake segment illuminates (if rotor brake is applied).

e. _____ Low RPM segment illuminates.

f. _____ Cowl door segment illuminates when one, two, or all of the following doors are open: fuel filler door, right side engine door, and/or baggage compartment door.

g. _____ All segments illuminate when test button is depressed (slight delay on low fuel light).

INSPECTION LIGHTING

a. _____ Left side cowl door - verify LEDs illuminate main rotor gearbox and hydraulic reservoir sight gages when cowl door is open (battery switch on or off).

EXTERIOR LIGHTING

a. _____ Position lights – check function.

b. _____ Anti-collision light – check function.

c. _____ Landing lights – check function.

INTERIOR LIGHTING

a. _____ Panel lighting and dimmer control – check function (position lights must be illuminated to enable panel lighting and dimmer control).

b. _____ Map light – check function.

c. _____ Digital voltmeter – indicates approximately 24 volts.

d. _____ Oil temperature gage – slight needle deflection with engine cold.

e. _____ Fuel quantity gage – indication of fuel level.

(Turn battery switch off.)

5-41 Ground Check (continued)

9. _____ **Aircraft Documents:**

(Additional documents may be required in countries other than the US.)

a. _____ Inspect condition and verify R66 MT699-1 laminated pilot's checklist is current revision. Check revision status online at: www.robinsonheli.com.

b. _____ Inspect condition and verify R66 Pilot's Operating Handbook is current revision and contains correct Equipment List/Weight & Balance Data. Check revision status online at: www.robinsonheli.com.

c. _____ Verify airworthiness certificate onboard & matches helicopter S/N.

d. _____ Verify registration certificate onboard & matches helicopter S/N and all registration markings.

5-42 Run-Up

1. _____ Clean engine gas path, if required, per RR300 Series Operation and Maintenance Manual (OMM).

2. _____ Perform Pilot's Operating Handbook (POH) Section 4 "Preflight" checklist.

3. _____ Perform POH Section 4 "Before Starting Engine" checklist.

4. _____ Prior to start, verify rotor brake locks out starter.

5. _____ Perform POH Section 4 "Starting Engine and Run-Up" checklist.

6. _____ Generator light off.

7. _____ Verify N2/Rotor tachometer functions with battery and generator switches off. Return switches to on.

8. _____ No unusual bearing noise when varying RPM through operating range.

9. _____ Carefully beep N_2 toward 104%. If N_2 can be beeped above 104% (do NOT exceed 105%), adjust PTG rigging per MM §§ 76-21 and 76-22.

10. _____ Verify tachometer needles are properly adjusted/governed.

11. _____ Verify proper generator voltage.

12. _____ Heater operates properly.

13. _____ Verify acceptable instrument variation when transmitting on various frequencies.

14. _____ Verify operation and adjustment of low rotor RPM warning light and horn.

15. _____ Engine performance indications are within acceptable parameters.

5-42 Run-Up (continued)

16. _____ Check hydraulic system operation. Using cyclic-mounted hydraulics switch, turn hydraulics OFF. Using small longitudinal cyclic inputs, there should be approximately one-half inch of freeplay before encountering stiffness and feedback. Return cyclic to neutral. Turn hydraulics ON. Controls should be free with no feedback or uncommanded motion ("motoring"). Complete flight checks with hydraulics on.

17. _____ Air conditioning (if installed): Verify system blows cold air on both low and high settings. Verify no EMI/RFI with other instruments and systems. After a flight with air conditioning on, verify water drains from drain tube in ship's belly (may be little or no water in very dry conditions).

5-43 Flight Check

1. _____ **Hover:**

   a. _____ Verify normal gage indications.

   b. _____ Verify controllability in left and right pedal turns.

   c. _____ Verify hydraulic system zeros cyclic stick forces.

   d. _____ Evaluate vibration levels; if unacceptable, measure imbalance and correct.

2. _____ **Level Flight:**

   Conduct at typical cruise altitude (weather permitting) and maximum continuous torque. Loading to typical operating conditions or nominal weight and CG in middle of envelope will provide the most useful evaluation.

   a. _____ Verify tail rotor pedal position when yaw string is centered. Right pedal 0.25 to 0.75 inch forward of left pedal.

   b. _____ Verify tail rotor elastic trim cord zeros pedal forces (cord applies left pedal force).

   c. _____ Verify hydraulic system zeros cyclic stick forces and collective is balanced with no feedback.

   d. _____ Verify acceptable control forces (feedback) with hydraulics off.

   e. _____ Evaluate vibration levels; if unacceptable, measure imbalance and correct.

5-43 Flight Check (continued)

3. _____ **Power Assurance Check:**

Refer to R66 Pilot's Operating Handbook (POH) Chapter 5 power assurance chart. Conduct at typical cruise altitude (weather permitting) and maximum continuous torque (83%). Turn heater, generator, and anti-ice switches OFF. Stabilize N2/R at 100% (beep as required) and record the following values:

a. _____ N1

b. _____ % Torque (83% nominal)

c. _____ OAT

d. _____ MGT

e. _____ Pressure altitude

f. _____ Oil pressure

g. _____ Oil temperature

h. _____ Determine max allowable MGT from power assurance chart.

i. _____ Calculate margin. Margin = Max allowable MGT - Indicated MGT.

4. _____ **Autorotation:**

a. _____ Autorotate at 100 KIAS. Verify normal control forces and flying characteristics.

5. _____ **Shutdown:**

a. _____ Perform POH “Shutdown Procedure” checklist.

b. _____ Verify rotor brake function and ROTOR BRAKE annunciator segment illuminates.

5-45 100-Hour / Annual Maintenance and Inspection

RHC recommends retaining a copy of the most recently performed 100-hour / annual checklist with the aircraft's maintenance records to meet the requirement of 14 CFR § 91.417 (b)(1).

R66 Serial No.: _____ Technician Name: _____

Registration No.: _____

Collective-Activated (Time In Service) Hourmeter Indication: _____ Technician Certificate Number: _____

Helicopter Total Time In Service: _____

A. Preparation

_____ **Operation Checks:**
Perform ground and flight checks per § 5-40.

_____ **Cleaning (required by 14 CFR Part 43, Appendix D, paragraph (a)):**
Note any fluid leakage before cleaning. Clean main and tail rotor blades, hubs, and airframe exterior with a mild soap and water solution per Chapter 20.

> **CAUTION**
>
> Do not spray main rotor hub, tail rotor gearbox vent, hydraulic reservoir vent, swashplate area, or bearing seals with high-pressure water or solvent as water or solvent may cause corrosion or breakdown of lubricants. See RR300 Series Operation and Maintenance Manual (OMM) for engine cleaning instructions and precautions.

_____ **Access and Inspection Panels:**
Refer to R66 Illustrated Parts Catalog Chapter 6 for access and inspection panel locations. Remove or open necessary panels, doors, covers, fairings, and cowlings in accordance with 14 CFR Part 43, Appendix D, paragraph (a).

> NOTE
>
> If radio antennas are installed on removed panels, disconnect antenna lead and corresponding ground wire. Pull respective radio circuit breaker and tag circuit breaker with "Antenna Removed."

5-45 100-Hour / Annual Inspection (continued)

B. Inspection

CABIN FORWARD FOOTWELLS

_____ **Tail Rotor Pedal Bearing Blocks:**
Remove pedal bearing block covers as required. Examine accessible portion with inspection light and mirror. Inspect condition. Check for looseness or play in pedal bearings. Maximum allowable play is 0.080 inch axially and 0.030 inch radially. Verify bearing block security.

_____ **Adjustable Tail Rotor Pedals:**
Inspect condition. Verify no cracks in welds. Verify locking pins engage holes to secure adjustable pedals. Verify proper operating clearance and smooth actuation.

_____ **Co-Pilot Removable Tail Rotor Pedals:**
Inspect condition. Verify no cracks in welds. Verify locking pins engage holes to secure removable pedals. Verify proper operating clearance and smooth actuation.

_____ **Cabin Heater Diffusers:**
Inspect condition. Verify marking legibility. Verify no significant nicks, scratches or dents, or cracks in welds. Verify security.

_____ **Fire Extinguisher and Mount:**
Inspect condition. Inspect fire extinguisher per manufacturer's instructions. Verify no loss of charge or obstructions in extinguisher nozzle. Verify security.

_____ **Map Holders:**
Inspect condition. Verify no defects, tears, or material deterioration. Remove foreign objects and verify security.

_____ **License Holder:**
Inspect condition. Verify no defects, cracks in plastic, or material deterioration. Verify security.

_____ **Cabin Chin and Floor:**
Inspect condition. Verify equipment security. Retrieve and discard trapped debris.

CONSOLE

_____ **Console Assembly:**
Inspect condition. Verify no significant nicks, scratches or dents; verify no cracks, corrosion, or loose rivets in lower console assembly. Verify hinge security.

_____ **HID Landing Lights:**
Inspect condition. Verify proper installation and security of wiring and equipment.

_____ **Flight & Engine Instruments:**
Inspect condition. Verify proper instrument markings per R66 POH Section 2. Verify proper installation and security of wiring and equipment.

5-45 100-Hour / Annual Inspection (continued)

CONSOLE (continued)

_____ **Post Lights:**
Inspect condition. Verify proper function and equipment security.

_____ **Fuel Cutoff Control and Guard:**
Inspect condition. Verify cable and mounting bezel security. Verify proper adjustment and smooth operation of knob. Verify guard is attached to console.

_____ **Radios and Radio Trays:**
Inspect condition. Verify no cracks or corrosion. Verify proper installation and security of wiring and equipment.

_____ **Pitot & Static Lines:**
Inspect pitot and static lines for obstructions, cracking, chafing, pinching or kinking. Verify integrity of pitot and static line connections. Verify line security.

_____ **Tail Rotor Pedal Bearing Block Supports:**
Examine accessible portion with inspection light and mirror. Inspect both vertical sheet metal supports inside lower console and verify no cracks. Pay particular attention to area near NAS6603-13 bolts. Replace any cracked support prior to flight.

_____ **Tail Rotor Controls:**
Examine accessible portion with inspection light and mirror. Inspect tail rotor control components for obvious defects. Verify operating clearance.

_____ **Cabin Heater Hose:**
Inspect condition. Verify no collapsed areas or chafing. Verify hose clamp and hose security.

_____ **Copper Bus Bars:**
Inspect condition. Verify no corrosion or bends in bus bar. Verify bus bar security and isolation from surrounding structure.

_____ **Wiring:**
Inspect condition. Verify no loose, chafed, or broken wires or terminals. Verify neatness, proper routing and installation, and security.

_____ **Fasteners & Torque Stripes:**
Inspect condition. Verify proper installation and security of fasteners. Renew deteriorated torque stripes per Figure 5-1.

_____ **Close & Secure:**
Verify foreign objects are removed. Verify equipment security and cleanliness of interior. Close console and verify security.

5-45 100-Hour / Annual Inspection (continued)

PILOT-SIDE CONSOLE (Optional equipment)

_____ **Pilot Avionics Support Weldment:**
Inspect condition. Verify no significant nicks, scratches, or dents on console shell. Verify no cracks in welds. Verify weldment mounting security.

CIRCUIT BREAKER PANEL

> **CAUTION**
>
> Ensure BATTERY switch is turned off while circuit breaker panel is open.

_____ **Panel Cover:**
Inspect condition. Verify no damage to nutplates and rails in panel interior. Verify marking legibility.

_____ **Fuses and Fuse Holders:**
Inspect condition. Verify security and no corrosion. Verify correct fuse installation.

_____ **Circuit Breakers:**
Inspect condition. Check airworthiness directive applicability. Verify proper installation and security.

_____ **Copper Bus Bars:**
Inspect condition. Verify no corrosion or bends in bus bars. Verify bus bar security and isolation from surrounding structure.

_____ **Wiring:**
Inspect condition. Verify no loose, chafed, or broken wires or terminals. Verify neatness, proper routing and installation, and security.

_____ **Fasteners & Torque Stripes:**
Inspect condition. Verify proper installation and security of fasteners. Renew deteriorated torque stripes per Figure 5-1.

_____ **Close & Secure:**
Verify foreign objects are removed. Verify equipment security. Verify cleanliness of interior and of access cover. Close cover and verify security.

UNDER LEFT FRONT SEAT

_____ **Lithium-Ion Battery Circuit Back-Up Batteries (required with optional Lithium-ion main battery):**
Inspect condition. Verify presence and proper orientation of (2) 9V back-up batteries. Verify security of battery trays and G468-1 mount assembly. Verify legibility of silkscreen lettering on mount. Inspect wiring for obvious damage.

5-45 100-Hour / Annual Inspection (continued)

HORIZONTAL CONTROL TUNNEL (Front seats; continued)

_____ **Covers:**
Inspect condition. Verify marking legibility.

_____ **Antenna Wiring & Connectors:**
Inspect condition. Verify no loose, chafed, frayed, or broken wires. Verify no damaged connectors. Verify neatness, proper routing and installation, and security.

_____ **Cyclic Box Assembly:**
Inspect condition. Verify no nicks, scratches, dents, cracks, corrosion, or loose rivets. Verify no distortion or damage on cyclic stop sheet metal assembly. Verify security.

_____ **Cyclic Stick Assembly:**
Inspect condition. Verify no nicks, scratches, dents, cracks, or corrosion. Verify no cracks in welds. Verify security, proper operating clearance, and smooth actuation. Verify security of co-pilot control and locking pin.

_____ **Cyclic Boot:**
Inspect condition. Verify proper locking function of boot snaps. Verify no defects, tears, or material deterioration. Verify security.

_____ **Cyclic Friction Assembly:**
Inspect condition. Inspect link rod end bearings per § 5-33. Verify no excessive flaring at either end of friction spacer. Verify proper installation, security, and operation.

_____ **Cyclic Pivot:**
Inspect condition. Verify no nicks, scratches, dents, cracks, or corrosion. Inspect spherical bearings per § 5-33. Verify proper installation, security, and operating clearance.

Intentionally Blank

HORIZONTAL CONTROL TUNNEL (Front seats; continued)

_____ **Cyclic Horizontal Torque Tube:**
Examine accessible portion with inspection light and mirror. Verify no nicks, scratches, dents, cracks, or corrosion. Verify no cracks around reinforcement blocks on both ends of torque tube. Verify proper installation, security, and operating clearance.

_____ **Horizontal Push-Pull Tubes:**
Examine accessible portion with inspection light and mirror. Inspect condition per § 5-32. Verify no nicks, scratches, chafing, dents, cracks, or corrosion. Inspect rod end bearings per § 5-33; verify rod ends are centered and palnut and jam nut are tight. Check witness holes for proper thread engagement. Verify proper installation, security, and operating clearance.

_____ **Collective Stick Assembly:**
Inspect condition. Verify no nicks, scratches, dents, cracks, or corrosion. Verify no cracks in welds. Verify proper installation, security, and operation of collective micro switches. Verify security, proper operating clearance, and smooth actuation of both flight and throttle controls. Verify over center spring holds twist grip full open or full closed. Verify placard legibility.

_____ **Collective Stick Torque Tube:**
Inspect condition. Verify no nicks, scratches, dents, cracks, or corrosion.

_____ **Collective Boot:**
Inspect condition. Verify proper locking function of boot snaps. Verify ty-rap is properly installed (loosely securing boot around collective stick). Verify no defects, tears, or material deterioration. Verify security.

_____ **Fuel Valve Knob and Guard:**
Inspect condition. Verify cable and mounting bezel security. Verify proper adjustment and smooth operation of valve. Verify guard is present.

_____ **Collective Friction & Stop Assembly:**
Inspect condition. Verify no nicks, scratches, dents, cracks, or corrosion in stop assembly. Verify no bending or binding of stop through full control travel, with and without friction applied. Measure collective friction per § 67-22. Verify proper installation and security of collective friction lever and stop assembly.

_____ **Co-Pilot Removable Collective Stick Assembly:**
Remove co-pilot collective stick assembly. Inspect condition. Verify no nicks, scratches, dents, cracks, or corrosion. Verify no damage to spring pin and safety wire at coupling. Firmly grasp coupling and rotate twist grip in each direction with opposite hand. Verify no free play of coupling or spacer relative to torque tube. Install removable collective stick in helicopter and verify both locking pins engage holes to secure stick. Verify security, proper operating clearance, and smooth actuation of both flight and throttle controls. Verify placard legibility.

_____ **Co-Pilot Removable Collective Boot:**
Inspect condition. Verify proper locking function of boot snaps. Verify ty-rap is properly installed (loosely securing boot around collective stick). Verify no defects, tears, or material deterioration. Verify security.

HORIZONTAL CONTROL TUNNEL (Front seats; continued)

_____ **Pitot & Static Lines & Drains:**
Inspect pitot and static lines for obstructions, cracking, chafing, pinching, or kinking. Remove drain plugs from tee fittings in each line and clear any moisture from system. Install drain plugs. Verify integrity of pitot and static line connections. Verify line security.

_____ **Wiring:**
Inspect condition. Verify no loose, chafed, or broken wires or terminals. Verify neatness, proper routing and installation, and security.

_____ **Fasteners & Torque Stripes:**
Inspect condition. Verify proper installation and security of fasteners. Renew deteriorated torque stripes per Figure 5-1.

_____ **Antennas:**
Inspect condition. Verify no cracks where antennas mount to cowling. Verify security.

_____ **Close & Secure:**
Verify foreign objects are removed. Verify equipment security. Verify cleanliness of interior and of inspection and access covers and cowlings. Connect ELT (if installed) wiring at connectors and anti-ice switch wiring terminals under cyclic box cover. Connect antenna leads and ground wires (if installed). Install covers and cowlings removed in preceding steps. Verify security. Verify security of removable and adjustable controls. Fasten cyclic, collective, and removable collective boot snaps.

HORIZONTAL CONTROL TUNNEL (Aft seats)

_____ **Covers:**
Inspect condition. Verify marking legibility.

_____ **Antenna Wiring & Connectors:**
Inspect condition. Verify no loose, chafed, frayed, or broken wires. Verify no damaged connectors. Verify neatness, proper routing and installation, and security.

_____ **Cyclic Yoke:**
Inspect condition. Verify no cracks, corrosion, or fretting. Inspect spherical bearings per § 5-33. Verify proper installation, security, and operating clearance.

_____ **Cyclic Fork:**
Inspect condition. Verify no nicks, scratches, dents, cracks, or corrosion. Inspect rod end bearings per § 5-33. Verify proper installation, security, and operating clearance.

_____ **Cyclic Horizontal Torque Tube:**
Examine accessible portion with inspection light and mirror. Verify no nicks, scratches, dents, cracks, or corrosion. Verify no cracks around reinforcement blocks on both ends of torque tube. Verify proper installation, security, and operating clearance.

_____ **Horizontal Push-Pull Tubes:**
Examine accessible portion with inspection light and mirror. Inspect condition per § 5-32. Verify no nicks, scratches, chafing, dents, cracks, or corrosion. Inspect rod end bearings per § 5-33; verify rod ends are centered and palnut and jam nut are tight. Check witness holes for proper thread engagement. Verify proper installation, security, and operating clearance.

HORIZONTAL CONTROL TUNNEL (Aft seats; continued)

_____ **Fuel Cutoff and Throttle Control:**
Inspect condition. Verify proper fuel cutoff and throttle control clearance to installed equipment and surrounding structure. Verify proper installation and security.

_____ **Cabin Heater Valve and Control:**
Inspect condition. Verify control clearance to installed equipment and surrounding structure. Verify heater valve security. Verify proper installation and smooth operation of valve.

_____ **Flight Control Bellcranks:**
Inspect condition. Verify no nicks, scratches, dents, cracks, or corrosion. Inspect spherical bearings per Section 5-33. Verify proper installation, security, and operating clearance.

_____ **Bellcrank Support:**
Inspect condition. Verify no cracks or corrosion in welds. Verify no cracks where support mounts to keel panels. Verify proper installation and security.

_____ **Evaporator and Blower Assembly (Air Conditioning; if installed):**
Remove middle seat assembly and cover, and inspect condition. Verify refrigerant line security, no damage, and clearance to adjacent structure. Verify no loose, chafed, frayed, or broken wires. Verify proper installation and security of blower and evaporator components.

_____ **Evaporator Drain Tubes and Valve (Air Conditioning; if installed):**
Remove middle seat assembly and cover, and covers inside left and right seat compartments to access drain system. Verify tubes are unobstructed. Function-check drain system by simultaneously squeezing drain tube and sediment tube near tee-fitting and verify check-valve ball moves up momentarily.

VERTICAL CONTROL TUNNEL

_____ **Vertical Push-Pull Tubes:**
Examine accessible portion with inspection light and mirror. Inspect condition per Section 5-32. Verify no nicks, scratches, chafing, dents, cracks, or corrosion. Inspect rod end bearings per Section 5-33; verify rod ends are centered and palnut and jam nut are tight. Check witness holes for proper thread engagement. Verify proper installation, security, and operating clearance.

_____ **Beep Switch Actuator:**
Inspect condition. Verify proper control clearance to installed equipment and surrounding structure. Verify proper actuator installation, security, and operation.

_____ **Tunnel Interior:**
Verify general cleanliness of tunnel interior. Inspect for fluid leaks or seepage; investigate cause and correct.

_____ **Seat Backs:**
Inspect condition. Verify upholstery cleanliness and security.

5-45 100-Hour / Annual Maintenance and Inspection

CABIN BULKHEAD

_____ **Blind Encoder & Engine Monitoring Unit (EMU):**
Inspect condition. Inspect wiring for obvious damage. Verify no cracks where units mount to bulkhead. Verify proper installation and security. Download EMU data as required per RR300 Series OMM.

_____ **Fuse Block and Fuses (Air Conditioning; if installed):**
Inspect condition. Verify no corrosion. Verify correct fuse amperage and security.

_____ **Antenna Wiring:**
Inspect condition. Verify no loose, chafed, frayed, or broken wires. Verify neatness, proper routing and installation, and security. Check grommets for proper installation.

_____ **Pitot & Static Lines:**
Inspect pitot and static lines for obstructions, cracking, chafing, pinching, or kinking. Verify integrity of pitot and static line connections. Verify line security.

_____ **Seat Back Interior:**
Verify general cleanliness of seat back interior. Inspect for fluid leaks or seepage; investigate cause and correct.

_____ **Cabin Bulkhead:**
Examine accessible portion with inspection light and mirror. Verify no nicks, scratches, dents, cracks, corrosion, or loose rivets. Verify stiffener security. Verify upholstery cleanliness and security.

_____ **Wiring:**
Inspect condition. Verify no loose, chafed, or broken, wires or terminals. Verify neatness, proper routing and installation, and security.

_____ **Fasteners & Torque Stripes:**
Inspect condition. Verify proper installation and security of fasteners. Renew deteriorated torque stripes per Figure 5-1.

_____ **Antennas:**
Inspect condition. Verify no cracks where antennas mount to cowlings. Verify security.

_____ **Close & Secure:**
Verify foreign objects are removed. Verify equipment security. Verify cleanliness of interior and of inspection and access covers and cowlings. Connect antenna leads and ground wires (if installed). Install covers and cowlings removed in preceding steps. Verify security.

BAGGAGE COMPARTMENT

_____ **Door:**
Inspect condition. Verify proper operation of micro switch and COWL DOOR warning segment. Inspect hinges and latches for obvious defects. Verify security and proper latching/locking function.

_____ **Carpet:**
Inspect condition. Verify no defects, tears, or material deterioration. Verify proper installation and security.

5-45 100-Hour / Annual Inspection (continued)

BAGGAGE COMPARTMENT (continued)

_____ **Interior:**
Inspect condition. Verify no structural damage. Verify general cleanliness of baggage compartment. Verify any installed equipment or passenger cargo are secure.

_____ **Generator Control Unit (GCU) & Wiring:**
Inspect condition. Verify no exposed, loose, chafed, or broken, wires & terminals. Verify proper installation and security of wiring covers and Generator Control Unit (GCU).

BATTERY

_____ **Lead-Acid Battery Installations:**
Inspect condition. Verify no cracks or corrosion on or near battery cable terminals. As required, perform capacity test or replace battery per manufacturer's instructions. Verify battery cable security. Verify no corrosion in surrounding structure.

_____ **Lithium-Ion Battery Installation (if equipped):**
Refer to § 96-12. Inspect condition. Verify no cracks or corrosion on or near battery terminals. Verify vent hose, comm connector wiring, and battery cable security. Perform scheduled maintenance as required. Verify no corrosion in surrounding structure.

AUX FUEL SYSTEM (If equipped)

_____ **Placards:**
Verify placard legibility, proper installation, and security.

_____ **Aux Fuel Tank:**
Examine accessible portion with inspection light and mirror. Inspect condition of exterior and verify no leakage. Check bladder interior for foreign objects or debris. Verify security.

_____ **Aux Fuel Tank Support:**
Examine accessible portion with inspection light and mirror. Inspect condition of exterior; verify no cracks or obvious damage. Verify security.

_____ **Aux Fuel Hoses:**
Inspect condition. Verify no leakage, chafing, or obvious damage to fuel lines. Verify line clearance to installed equipment and surrounding structure. Verify security.

_____ **Aux Fuel Gage Sender & Wiring:**
Inspect condition. Verify no loose, chafed, or broken wires or terminals. Verify proper installation and security of sender and wiring.

_____ **Aux Fuel Pump Wiring:**
Inspect condition. Verify no loose, chafed, or broken wires. Verify proper installation and security of wiring.

5-45 100-Hour / Annual Inspection (continued)

AUX FUEL SYSTEM (If equipped; continued)

_____ **Aux Fuel Cap:**
Inspect condition. Verify no damage or deterioration of gasket. Install cap and verify proper locking function. Verify security.

_____ **Aux Fuel Tank Sump Drain:**
Inspect condition. Verify drain valve opens easily, drains fuel freely, springs closed, and seals completely. Inspect drain hose assembly for defects, tears, or material deterioration. Secure hose near drain valve at tab.

_____ **MT183-1 Tool Kit:**
Inspect condition. Remove kit and verify kit contains loose parts listed in R66 Illustrated Parts Catalog. Clip kit to aux tank and verify security.

MAIN ROTOR GEARBOX COMPARTMENT

_____ **Cowling Doors:**
Inspect condition. Verify proper operation of fasteners.

_____ **Antenna Wiring & Connectors:**
Inspect condition. Verify no loose, chafed, frayed, or broken wires. Verify no damaged connectors. Verify neatness, proper routing and installation, and security. Check grommets for proper installation.

_____ **Placards:**
Verify placard legibility, proper installation, and security. Refer to Chapter 11.

_____ **Fuel Tank:**
Examine accessible portion with inspection light and mirror. Inspect condition of exterior and verify no leakage. Check bladder interior for foreign objects or debris. Verify security.

_____ **Fuel Gage Sender & Wiring:**
Inspect condition. Verify no loose, chafed, or broken, wires or terminals. Verify proper installation and security of sender and wiring.

_____ **Low-Fuel Switch Assembly Warning:**
Turn battery switch on. With a clean wooden dowel, gently depress low-fuel sender float in fuel bladder and verify LOW FUEL warning segment illuminates after approximate 1-second delay. Turn battery switch off.

_____ **Fuel Cap:**
Inspect condition. Verify no damage or deterioration of gasket. Install cap and verify proper locking function. Verify security.

5-45 100-Hour / Annual Inspection (continued)

MAIN ROTOR GEARBOX COMPARTMENT (continued)

_____ **Fuel Tank Rollover Vents:**

Inspect condition. Inspect Tygon® tube for defects, tears, or material deterioration. Verify proper safety wire installation and security. Verify 0.25 inch minimum clearance between cable assembly and vent assembly Tygon® tube; adjust cable as required. Verify no obstructions in vents.

_____ **Fuel Tank Sump Drain:**

Inspect condition. Verify drain valve opens easily, drains fuel freely, springs closed, and seals completely. Inspect drain tube and clamp for defects, tears, or material deterioration. Clear fuel from drain tube and install clamp.

_____ **Fuel Valve:**

Inspect condition. Verify cable and component security. Verify proper installation and (smooth) operation of valve.

_____ **Cabin Bulkhead:**

Inspect condition. Verify no deformation, buckling, wrinkling, nicks, scratches, dents, cracks, corrosion, fretting, or loose rivets. Verify no leakage from fuel tanks. Verify security.

_____ **Main Rotor Gearbox:**

Inspect condition. Verify no damage, material deterioration, or deformation of gearbox mounts. Verify no leakage at mast tube-to-gearbox attachment. Inspect mast tube for cracks. With ship on level ground, verify correct oil level and cleanliness through sight gage and adjust or flush as required. Verify security of Hall Effect senders and yoke magnets. Inspect oil lines for leakage, chafing, or obvious damage. Inspect oil pump mounting and fittings for leaking or obvious damage. Inspect gearbox oil filter for leakage or for tripped bypass indicator. Verify oil system proper installation and security.

> NOTE
>
> At 600 hours time in service or annually, whichever occurs first, remove chip detector and clean off varnish build-up from detector's magnetic probe and adjacent metal body (a toothbrush dampened with solvent works well). Service gearboxes, change oil and filter, and clean chip detectors at intervals recommended in § 5-20.

_____ **Rotor Brake:**

Inspect condition. Verify integrity of brake pads and 0.030 inch minimum pad thickness. Verify brake pads are clear of engine shaft with brake released. Inspect micro switches for cracks. Verify no loose, chafed, or broken wires or terminals. Verify security. Inspect both pulleys (one at end of lever, one next to fuel tank) for cracks. Verify no frayed strands or binding of rotor brake activating cable. Verify proper routing and installation, security, and operation of brake and brake micro switch.

5-45 100-Hour / Annual Inspection (continued)

MAIN ROTOR GEARBOX COMPARTMENT (continued)

_____ **Hydraulic Servo Support Frame:**

Inspect condition. Inspect rod ends per § 5-33. Use an inspection light and mirror to inspect all parts of each weld. Verify no cracks or corrosion in servo support. Verify proper installation and security.

_____ **Jackshaft:**

Inspect condition. Verify no cracks or corrosion in welded assembly. Inspect jackshaft to vertical push-pull tube attachment. Inspect jackshaft aft support frame attachment and forward attachment rod end per § 5-33. Inspect C343-8 tube and rod ends linking jackshaft to aft servo. Verify security and proper operating clearance.

MAIN ROTOR GEARBOX COMPARTMENT (continued)

_____ **Main Rotor Push-Pull Tubes:**
Examine accessible portion with inspection light and mirror. Inspect condition per Section 5-32. Verify no nicks, scratches, chafing, dents, cracks or corrosion. Inspect rod end bearings per Section 5-33; verify rod ends are centered and palnut and jam nut are tight. Check witness holes for proper thread engagement. Verify proper installation, security, and operating clearance.

_____ **Tail Rotor Push-Pull Tube & Forward Bellcrank:**
Examine accessible portion with inspection light and mirror. Inspect condition per Section 5-32. Verify no nicks, scratches, chafing, dents, cracks, or corrosion. Inspect rod end bearings per Section 5-33; verify rod ends are centered and palnut and jam nut are tight. Check witness holes for proper thread engagement. Inspect bellcrank and bellcrank sheet metal mounting for nicks, scratches, dents, cracks, or corrosion. Inspect spherical bearings per Section 5-33. Verify proper installation, security, and operating clearance.

_____ **Hydraulic Reservoir:**
Inspect condition. Verify no significant leakage. Replace filter and packing at intervals specified in Section 5-20. Drain and flush hydraulic system per Section 12-33 if oil has turned dark or emits bad odor. Add fluid as required. Verify security.

CAUTION

Cleanliness of hydraulic fluid is vital to proper system operation. Service hydraulic system with clean fluid from sealed containers. Verify funnels, tubing, and other service tooling is free of contaminants.

_____ **Hydraulic Servos:**
Inspect condition. Inspect rod ends per Section 5-33. Verify approximately 0.040 inch total free play at servo valve input. Verify no significant servo leakage. Clean servo input rod end/clevis area with no-residue, non-alcoholic solvent as required. Verify no obvious defects and security of scissors at upper clevis of servos. Verify proper installation and clearance from surrounding structure through full control travel.

CAUTION

Use LPS PreSolve to clean hydraulic parts. Do not use alcohol.

_____ **Hydraulic Hoses, Lines, & Fittings:**
Inspect condition. Verify no leakage, chafing, or obvious damage to hydraulic lines. Verify integrity of connections. Verify fluid line clearance to installed equipment and surrounding structure and sufficient fluid hose slack available through full control travel. Verify proper installation and security.

_____ **Hydraulic Pump:**
Inspect condition. Inspect Telatemp per Section 5-35. Verify no significant leakage. Verify proper installation and security.

5-45 100-Hour / Annual Maintenance and Inspection

MAIN ROTOR GEARBOX COMPARTMENT (continued)

_____ **Upper Steel Tube Frame:**
Inspect condition. Verify no nicks, scratches, dents, cracks, or corrosion. Verify no chafing where wires, hoses, or clamps attach to frame. Examine each weld for cracks with an inspection light and mirror.

> **CAUTION**
>
> Upper steel tube frame is fatigue loaded and therefore susceptible to fatigue cracks. Inspect all joints thoroughly.

_____ **F908-1 (Tail Rotor Drive) Yoke Assembly:**
Inspect condition. Verify no cracks, corrosion, or fretting. Verify proper installation, security, and operating clearance. Verify security of magnets.

_____ **G779-1 Pulley (Air Conditioning; if installed):**
Inspect condition. Verify no cracks, corrosion, or fretting. Verify no nicks or sharp edges in fins that could damage v-belt. Verify proper installation, security, and operating clearance.

_____ **V-Belt (Air Conditioning; if installed):**
Inspect condition. Replace belt if exhibiting frayed edges, excessive cracking, heat damage, or rubber deterioration. Verify 4.5-5.5 lb of force applied mid-span deflects belt 0.16-inch; adjust as required per Section 21-21.

_____ **Compressor Assembly (Air Conditioning; if installed):**
Inspect condition. Verify security of mounting. Verify no loose, chafed, frayed, or broken wires. Verify proper installation and security of pressure switches, snubber, and refrigerant lines.

_____ **Refrigerant Hose Assemblies (Air Conditioning; if installed):**
Verify security, no damage, and clearance to adjacent structure. Verify dust caps installed on service fittings where lines mount to compressor.

INTERMEDIATE STAGE & SCROLL ASSEMBLY

_____ **F196-1 (Tail Rotor Drive) Fan Shaft:**
Inspect condition. Verify no shaft corrosion. Remove any light surface corrosion and apply wax or suitable corrosion inhibitor. Verify no cracks, corrosion, or fretting in fore and aft weldment. Verify proper installation, security, and operating clearance.

_____ **C947-3 (Tail Rotor Drive) Plate Assemblies, Forward and Intermediate:**
Inspect condition. Verify no distortion, cracks, corrosion, or fretting. If fretting is detected, contact RHC Technical Support. Verify bonded washers are installed on both sides of each flex plate ear. Verify proper installation, security, and operating clearance.

_____ **Fanwheel Assembly and Scroll Assembly:**
Clean fanwheel blades and inspect condition. Verify no cracks, corrosion, or obvious damage on blade leading edges or fan assembly. Verify 0.10 inch minimum gap between G174-1 fanwheel assembly and forward and aft F305-5 inlets. Check gap all the way around; rotate fanwheel and check gap again (several positions). If gap does not meet minimum limit, trim inlets per Section 79-11. Verify proper installation, security, and operating clearance. Verify no cracks or damage to scroll assembly.

5-45 100-Hour / Annual Inspection (continued)

INTERMEDIATE STAGE & SCROLL ASSEMBLY (continued)

_____ **Emergency Locator Transmitter (ELT; if installed):**
Inspect condition. Verify proper installation, security, and clearance from drive train components. Comply with 14 CFR § 91.207 (d), if required.

_____ **Pitot Line & Static Vent:**
Inspect pitot and static lines for obstructions, cracking, chafing, pinching or kinking. Verify integrity of pitot and static line connections. Verify line security.

_____ **Horizontal Firewall:**
Inspect condition. Verify no deformation, buckling, wrinkling, nicks, scratches, dents, cracks, corrosion, fretting, or loose rivets. Verify no leakage from fuel tanks.

_____ **Wiring:**
Inspect condition. Verify no loose, chafed, or broken wires or terminals. Verify neatness, proper routing and installation, and security.

_____ **Fasteners & Torque Stripes:**
Inspect condition. Verify proper installation and security of fasteners. Renew deteriorated torque stripes per Figure 5-1.

_____ **Antennas:**
Inspect condition. Verify no cracks where antennas mount to cowling. Verify security.

_____ **Cowling Doors:**
Inspect condition. Verify proper operation of fasteners.

_____ **F910-1 (Main Rotor Drive) Yoke:**
Inspect condition. Verify no cracks, corrosion, or fretting. Verify proper installation, security, and operating clearance.

_____ **A947-2 (Main Rotor Drive) Plate Assemblies:**
Inspect condition. Inspect flex plate for distortion, cracks, corrosion, or fretting. If fretting is detected, contact RHC Technical Support. Verify bonded washers are installed on both sides of each flex plate ear. Verify proper installation, security, and operating clearance.

_____ **F642 (Engine) Shaft Weldment:**
Inspect condition. Verify 0.2 inch minimum clearance between shaft weldment and firewall grommet; verify equal gap concentrically between shaft and box assembly hole edges. Adjust F174-1 support weldment rod ends per § 53-31 as required. Verify no shaft corrosion. Remove any light surface corrosion and apply wax or suitable corrosion inhibitor. Verify no cracks, corrosion, or fretting in fore and aft weldment. Verify proper installation, security, and operating clearance.

5-45 100-Hour / Annual Inspection (continued)

INTERMEDIATE STAGE & SCROLL ASSEMBLY (continued)

_____ **Engine Firewall:**
Inspect condition. Verify no deformation, buckling, wrinkling, nicks, scratches, dents, cracks, corrosion, fretting, or loose rivets. Verify no leakage from fuel tanks.

_____ **Engine Oil Tank:**
Inspect condition. Verify no leakage or obvious damage to oil tank exterior. Check tank interior for foreign objects. Add oil as required per R66 POH Section 8. Verify tank security.

_____ **Tailcone Attachment:**
Inspect condition. Verify no cracks near fasteners attaching tailcone to upper frame. Verify proper installation and security.

_____ **Upper Steel Tube Frame:**
Inspect condition. Verify no nicks, scratches, dents, cracks, or corrosion. Verify no chafing where wires, hoses, or clamps attach to frame. Examine each weld for cracks with an inspection light and mirror.

CAUTION

Upper steel tube frame is fatigue loaded and therefore susceptible to fatigue cracks. Inspect all joints thoroughly.

_____ **Antenna Wiring & Connectors:**
Inspect condition. Verify no loose, chafed, frayed, or broken wires. Verify no damaged connectors. Verify neatness, proper routing and installation, and security. Check grommets for proper installation.

_____ **Fasteners & Torque Stripes:**
Inspect condition. Verify proper installation and security of fasteners. Renew deteriorated torque stripes per Figure 5-1.

_____ **Antennas:**
Inspect condition. Verify no cracks where antennas mount to cowling. Verify security.

_____ **Close & Secure:**
Verify foreign objects are removed. Verify equipment security. Verify cleanliness of interior and of inspection and access doors and cowlings. Connect antenna leads and ground wires, if installed. Install/close doors and cowlings removed in preceding steps. Verify security.

5-45 100-Hour / Annual Inspection (continued)

ENGINE

Refer to RR300 Series OMM, and applicable engine component manufacturer's maintenance publications for service and inspection procedures.

Additional service and inspection intervals are specified in § 5-20.

NOTE
For engine-related matters, if there is a conflict between this manual and Rolls-Royce instructions, Rolls-Royce instructions take precedence. Notify RHC of discrepancy.

_____ **Inlet Plenum and Filter Bypass Indication:**
Inspect plenum condition. Verify no foreign object debris or loose items. Turn battery switch on. Verify annunciator panel warning segment illuminates when bypass doors are opened individually, then simultaneously. Turn battery switch off.

_____ **Standard (Foam) Air Filter Assembly:**
Inspect condition. Verify no tears, punctures, or damage to filter media or cage assembly; verify no corrosion, cracks, or distortion to filter assembly components. Replace filter as required per § 71-21. Verify proper installation and security.

_____ **Inlet Barrier Filter (if installed):**
Inspect condition. Verify no tears, punctures, or damage to filter media or cage assembly; verify no corrosion, cracks, or distortion to filter assembly components. Service or replace filter assemblies as required per § 71-21. Note indication on filter maintenance aid. Verify proper installation and security.

_____ **Engine Hoses:**
Inspect condition. Verify no rips, holes, or collapsed areas. Verify proper installation and security.

_____ **Exhaust Pipe:**
Inspect condition. Verify no cracks near welds at angle where weldment attaches to exhaust collector. Verify no cracks in struts or near strut welds where exhaust gases exit pipe. Inspect condition and security of F173-1 struts; verify no cracks near welds where struts attach to support ears. Inspect condition and security of gearbox vent and clamps.

_____ **Starter-Generator & Wiring:**
Inspect condition. Verify no loose, chafed, frayed, or broken wires. Verify no damaged connectors. Verify neatness, proper routing and installation, and security.

_____ **Engine Oil and Oil Filter:**
Add oil as required per R66 POH Section 8. Change oil and oil filter as required per RR300 OMM. Verify filter security.

5-45 100-Hour / Annual Inspection (continued)

ENGINE (continued)

_____ **Oil Lines:**
Inspect condition. Verify no leakage where lines connect to tank. Verify no leakage, chafing, or obvious damage to oil lines. Verify line clearance to installed equipment and surrounding structure. Verify security.

_____ **Cooling Duct and Oil Coolers:**
Verify installation security with no cracks in duct or mounting. Verify cooler line connections are tight and coolers have no nicks, dents, cracks, or corrosion. Verify duct and cooler cores are free of debris to allow full airflow.

_____ **Fuel Control Unit (FCU) and Control Rigging:**
Verify proper routing and security of throttle and fuel cutoff controls; verify smooth actuation of both controls without binding. Verify FCU throttle arm contacts idle stop with twist grip closed and contacts maximum throttle stop with twist grip open. Verify FCU cutoff lever rests in detent when control is OFF and has 0.030–0.090 inch clearance from maximum fuel stop when control is ON.

_____ **Fuel Filter:**
Inspect condition; service fuel filter per RR300 OMM, as required. Verify proper installation and security of wiring and housing.

_____ **Fuel Hose:**
Inspect condition. Verify no leakage, chafing, or obvious damage to fuel lines. Verify line clearance to installed equipment and surrounding structure. Verify security.

_____ **Firewalls:**
Inspect condition. Verify no deformation, buckling, wrinkling, nicks, scratches, dents, cracks, corrosion, fretting, or loose rivets. Pay particular attention to structural attachment points. Inspect condition of engine-to-firewall seal. Verify no open holes.

WARNING

Open holes in engine-to-firewall seals are potential fire leak paths.

_____ **Engine Mounts:**
Inspect condition. Verify no cracks or corrosion in engine mount weldment. Verify safety wire and security of mounting bolts.

5-45 100-Hour / Annual Inspection (continued)

ENGINE (continued)

_____ **Lower Steel Tube Frame:**

Inspect condition. Verify no nicks, scratches, dents, cracks, or corrosion. Verify no chafing where wires, hoses, or clamps attach to frame. Examine each weld for cracks with an inspection light and mirror.

> **CAUTION**
>
> Lower steel tube frame is fatigue loaded and therefore susceptible to fatigue cracks. Inspect all joints thoroughly.

_____ **Condenser and Fan Assemblies (Air Conditioning; if installed):**

Inspect condition. Verify security of fans, box assembly, condenser, and firewall supports. Verify security of desiccant cap.

_____ **Refrigerant Line Assemblies (Air Conditioning; if installed):**

Inspect condition. Verify security, no damage, and clearance to adjacent structure.

_____ **Wiring:**

Inspect condition. Verify no loose, chafed, or broken wires or terminals. Check for heat or fluid damage. Verify neatness, proper routing and installation, and security.

_____ **Fasteners & Torque Stripes:**

Inspect condition. Verify proper installation and security of fasteners. Renew deteriorated torque stripes per Figure 5-1.

_____ **Close & Secure:**

Verify foreign objects are removed. Verify equipment security. Verify cleanliness of interior and of cover or cowling. Install/close inspection covers or cowlings removed in preceding steps. Verify security.

Intentionally Blank

TAILCONE

_____ **Inspection Plugs:**
Inspect condition. Verify proper operation of fasteners.

_____ **Tail Rotor Drive Shaft Assembly:**
Examine accessible portion through inspection holes with inspection light and mirror. Verify no cracks, corrosion, or fretting in fore and aft weldment. Verify no evidence of drive shaft contact with tailcone bays. Verify no bowing, bends, dents, cracks, or corrosion. Perform tail rotor drive shaft runout per § 65-21. Verify proper installation, security, and operating clearance.

> **CAUTION**
>
> Bowing, bends, dents, cracks, or corrosion are cause for immediate replacement of tail rotor drive shaft.

_____ **Tail Rotor Push-Pull Tube & Forward Bellcrank:**
Examine accessible portion through inspection holes with inspection light and mirror. Inspect condition per § 5-32. Verify no nicks, scratches, chafing, dents, cracks, or corrosion. Inspect rod end bearings per § 5-33; verify rod ends are centered and palnut and jam nut are tight. Check witness holes for proper thread engagement. Inspect bellcrank and bellcrank mount for nicks, scratches, dents, cracks, or corrosion. Inspect spherical bearings per § 5-33. Verify proper installation, security, and operating clearance. Verify tail rotor guard mounting screw shanks clear push-pull tube.

_____ **Tail Rotor Drive Shaft Hanger Bearing & Hanger:**
Inspect condition. Inspect bearing for obvious damage. Verify integrity of bearing seals. Verify bearing's inner race-to-drive shaft torque stripe is intact and no evidence of bearing slippage. Verify no bends, cracks, corrosion, or obvious damage to hanger and hanger mount to tailcone bulkhead. Verify proper installation, security, and smooth operation.

_____ **Tail Rotor Drive Shaft Damper Assembly:**
Inspect condition. Inspect bearing for obvious damage. Verify integrity of bearing seals. Inspect bearing housing for cracks or corrosion. Verify bearing's inner race-to-drive shaft torque stripe is intact and no evidence of bearing slippage. Verify no bends, cracks, corrosion or obvious damage to friction arms and (Teflon) bearings. Verify proper installation, security, and smooth operation.

_____ **Tailcone Interior:**
Inspect condition. Verify no nicks, scratches, dents, cracks, corrosion, fretting or loose rivets. Verify no cracks where damper assembly mounts to tailcone. Verify no excessive wear in bulkhead bushings from push-pull tubes. Retrieve and discard trapped debris.

_____ **Tailcone Exterior:**
Inspect condition. Refer to § 53-41. Inspect tailcone exterior for nicks, scratches, dents, cracks, corrosion, fretting or loose rivets. Verify no obstructions in drain hole at forward edge of each bay (except forward bay).

_____ **Antennas:**
Inspect condition. Verify no cracks where antennas mount to tailcone. Verify security.

TAILCONE (continued)

_____ **Anti-Collision Light:**
Inspect condition. Verify no cracks where anti-collision light mounts to tailcone. Verify lens cleanliness, clarity, and security. Verify proper operation.

_____ **Tail Rotor Visual Warning Guard:**
Inspect condition. Verify no cracks where guard mounts to tailcone. Inspect guard welds for cracks or corrosion. Verify security.

_____ **Wiring:**
Inspect condition. Verify no loose, chafed, or broken wires or terminals. Verify neatness, proper routing and installation, and security.

_____ **Fasteners & Torque Stripes:**
Inspect condition. Verify proper installation and security of fasteners. Renew deteriorated torque stripes per Figure 5-1.

_____ **Close & Secure:**
Verify foreign objects are removed. Verify equipment security. Verify cleanliness of interior and of inspection plugs. Install plugs removed in preceding steps. Verify security.

TAIL ROTOR & TAIL ROTOR GEARBOX

NOTE

Verify proper hardware installation securing plastic inspection cover. Longer screws could contact aft flex coupling and yoke.

_____ **Plastic Inspection Cover:**
Clean cover and inspect condition. Replace as required.

_____ **C947-3 (Tail Rotor Drive) Plate Assembly, Aft:**
Inspect condition. Inspect flex plate for distortion, cracks, corrosion, and fretting. If fretting is detected, contact RHC Technical Support. Verify bonded washers are installed on both sides of each flex plate ear. Verify proper installation, security, and operating clearance.

_____ **Tail Rotor Gearbox Input Yoke:**
Inspect condition. Verify no cracks, corrosion, or fretting. Inspect weld for cracks or corrosion. Verify proper installation, security, and operating clearance.

_____ **Tail Rotor Gearbox:**
Inspect condition. Verify gearbox-to-tailcone mounting security. Verify no leakage at input or output seals, chip detector, vent plug-filler assembly, or sight gage. With ship on level ground, verify correct oil level and oil cleanliness through sight gage and adjust or flush as required. Inspect Telatemp per § 5-35. Inspect output shaft for nicks, scratches, dents, cracks, or corrosion. Verify proper installation of safety wire (if installed).

TAIL ROTOR & TAIL ROTOR GEARBOX (continued)

_____ **Empennage:**
Inspect condition. Verify no nicks, scratches, dents, cracks, corrosion, fretting, or loose rivets on skins or near attachment points. Check tail rotor skid for evidence of tail rotor or tail rotor skid strike. Refer to § 5-61 for tail rotor skid strike inspection criteria. Verify no obstructions in lower vertical stabilizer and skid drain holes. Verify proper installation and security.

_____ **Aft Navigation Light:**
Inspect condition. Verify no cracks where aft navigation light mounts to empennage. Verify lens cleanliness, clarity, and security. Verify proper operation.

_____ **Pitch Control Bearing Assembly & Aft Bellcrank:**
Inspect condition. Verify pitch control assembly has less than 0.25 inch rotational play measured at pitch link attach bolt. Verify no leakage at bearing seals. Verify no nicks, scratches, dents, cracks, or corrosion on pitch control housing or bellcrank. Inspect bellcrank spherical bearings per § 5-33. Inspect spherical bearing atop stud protruding from underside of pitch control for cracks. Verify proper installation, security, and smooth actuation without binding.

> NOTE
>
> B345-4 tail rotor pitch links can have different shaft diameters. Balance tail rotor per § 18-20 if a different shaft diameter pitch link is installed.

_____ **Pitch Links:**
Inspect condition. Inspect rod ends per § 5-33. Remove and reinstall pitch links with outboard end inboard and inboard end outboard as required to obtain maximum service life. Reinstall chordwise weights at respective attachment points for balance purposes. Verify proper installation of hat washers. Verify proper installation, security and operating clearance.

_____ **Tail Rotor Blades:**
Inspect condition. Inspect blade surfaces for excessive erosion, nicks, scratches, buckling, voids or debonding, dents, cracks, or corrosion. Refer to § 64-30 for tap testing instructions and damage limitations. Verify no fretting of tail rotor blade root fitting bearings. Inspect bearings per § 5-33. Verify no obstructions in blade tip drain holes. Verify proper installation, security, and pitch change operation.

> **WARNING**
>
> **Structural damage may occur if compressed air is applied to blade tip drain holes.**

_____ **Tail Rotor Hub:**
Inspect condition. Verify no nicks, scratches, gouges, dents, cracks, or corrosion. Inspect elastomeric teeter bearings per § 5-34. Teeter rotor hub and verify teeter bearing bolt, spacers, and nuts do not rotate. Verify hub teeters smoothly. Verify proper installation and security of blade bolts.

TAIL ROTOR & TAIL ROTOR GEARBOX (continued)

_____ **Wiring:**
Inspect condition. Verify no loose, chafed, or broken wires or terminals. Verify neatness, proper routing and installation, and security.

_____ **Fasteners & Torque Stripes:**
Inspect condition. Verify proper installation and security of fasteners. Renew deteriorated torque stripes per Figure 5-1.

MAST FAIRING

_____ **Mast Fairing:**
Inspect condition. Verify no nicks, scratches, dents, cracks, corrosion, fretting, or loose rivets. Verify no yielding or cracking of pitot line and fuel vent restraint assembly.

> NOTE
>
> Yielding can be caused by over tightening screws in restraint nutplates.

_____ **Upper & Lower Ribs:**
Inspect condition. Inspect for cracks especially around mast tube attachments. Verify proper installation and security of ribs and lower rib clamp.

_____ **Vertical Push-Pull Tubes:**
Examine accessible portion with inspection light and mirror. Inspect condition per § 5-32. Verify no nicks, scratches, chafing, dents, cracks or corrosion. Inspect rod end bearings per § 5-33; verify rod ends are centered and palnut and jam nut are tight. Check witness holes for proper thread engagement. Verify proper installation, security, and operating clearance.

_____ **Pitot Tube & Line:**
Inspect pitot and static lines for obstructions, cracking, chafing, pinching or kinking. Verify integrity of pitot and static line connections. Verify proper routing and security of pitot tube and line. Verify no cracks where pitot tube mounts to mast fairing. Verify no obstructions in pitot tube.

_____ **Fuel Vent Weldment and Tygon® Tubes:**
Inspect condition. Verify no obstructions, cracking, chafing, pinching or kinking in plastic tubes. Inspect vents for cracks or obvious damage. Verify proper installation and security of safety wire.

_____ **Swashplate Upper Scissors:**
Inspect condition. Verify bearing play within limits referenced in § 67-42. Closely examine scissor linkage while a second person raises and lowers collective stick. Verify bolts and washers rotate together through full control travel without binding. Inspect fork assembly rod end bearing per § 5-33; verify rod end is centered and palnut and jam nut are tight. Verify proper installation of all parts, part security, and operating clearance.

MAST FAIRING (continued)

_____ **Swashplate Lower Scissors:**
Inspect condition. Verify bearing play within limits referenced in § 67-42. Closely examine scissor linkage while a second person raises and lowers collective stick. Verify bolts and washers rotate together through full control travel without binding. Inspect fork assembly rod end bearing per § 5-33; verify rod end is centered and palnut and jam nut are tight. Verify proper installation of all parts, part security, and operating clearance.

_____ **Swashplate Slider Tube:**
Inspect condition. Verify no cracks, corrosion, or loose rivets near tube base flange. Verify no damage or wearing through of anodized coating on tube surface.

_____ **Swashplate Interior:**
Remove swashplate boot lower ty-rap. Lift boot from swashplate, and verify no boot defects, tears, or material deterioration. Examine swashplate interior with inspection light and mirror. Verify no corrosion or debris between main rotor drive shaft and inside of slider tube. Install swashplate boot lower ty-rap. Verify proper boot position, security, and operating clearance.

_____ **Swashplate:**
Inspect condition. Verify no nicks, scratches, gouges, dents, cracks, or corrosion. Verify 0.020 inch maximum radial play between swashplate ball and slider tube. Rotate rotor by hand and verify no rough or dry bearings. Verify proper operation.

_____ **Swashplate Shimming:**
Closely examine area between lower swashplate and swashplate ball while a second person slowly raises and lowers collective stick. Verify synchronized movement of swashplate ball with swashplate when swashplate reverses direction.

> NOTE
>
> Swashplate shimming is required when swashplate ball lags collective inputs, indicating axial play. Shim swashplate per Chapter 67.

_____ **Fasteners & Torque Stripes:**
Inspect condition. Verify proper installation and security of fasteners. Renew deteriorated torque stripes per Figure 5-1.

_____ **Close & Secure:**
Verify foreign objects are removed. Verify equipment security. Verify cleanliness of interior and of access fairing. Close mast fairing and verify security.

5-45 100-Hour / Annual Maintenance and Inspection

ROTOR HUB & MAIN ROTOR BLADES

_____ **Hub:**
Inspect condition. Verify no nicks, scratches, gouges, dents, cracks, or corrosion. Verify no brown or black residue indicating bearing wear. Verify proper installation and security.

_____ **Hinge Bolts:**
Inspect condition. Check blade hinge friction by lifting blades until spindle tusks clear droop stops. Hold one blade level and cone opposite blade; rotor hub should not teeter as blade is coned. Repeat check on opposite blade. Verify cotter pins are properly installed and secure. Verify bolt heads and nuts are torque striped to thrust washers.

_____ **Pitch Links & Rod Ends:**
Inspect condition. Inspect rod end bearings per § 5-33; verify rod ends are centered and palnut and jam nut are tight. Check witness holes for proper thread engagement. Verify security of rivet in pitch link barrel. Verify no corrosion of pitch link assembly. Verify proper installation of safety wire and hat washers. Inspect condition of mandatory spacers contacting lower rod end bearings. Verify proper installation, security, and operating clearance.

_____ **Blade Spindles & Root Fittings:**
Inspect condition. Verify no cracks, corrosion, or obvious damage to blade spindles and horns. Verify no cracks, corrosion or missing paint in blade root fittings, especially in area adjacent to inboard edges of skin and doublers.

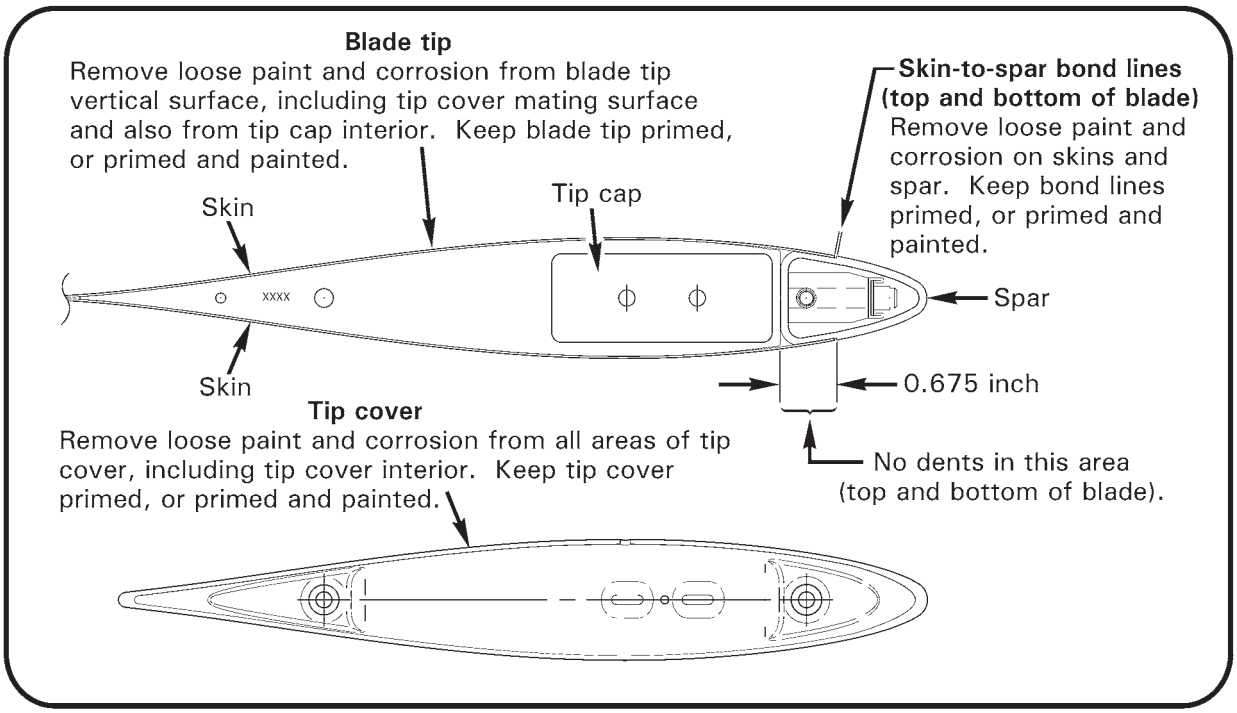

FIGURE 5-5 MAIN ROTOR BLADE TIP AND TIP COVER

ROTOR HUB & MAIN ROTOR BLADES (continued)

_____ **Blade Boots:**
Inspect condition. Verify no boot defects, tears, material deterioration, or pinholes resulting in oil leakage. Verify proper boot position and security. Verify sufficient clearance from hub assembly through full control travel.

_____ **Fasteners & Torque Stripes:**
Inspect condition. Verify proper installation and security of fasteners. Renew deteriorated torque stripes per Figure 5-1.

_____ **Blade Tips and Skin-to-Spar Bond Lines:**
Remove tip covers. Remove corrosion and loose paint from tip covers, blade tips, and skin-to-spar bond lines. Using an AN970-4 washer or 1965-or-later U.S. quarter-dollar coin, tap-test critical bond areas and verify no dull or hollow sounds. Visually inspect critical bond areas and verify no separation. Epoxy prime, or prime and paint, any exposed bare metal on tip covers, blade tips, and skin-to-spar bond lines. Install tip covers, ensuring cover edges are flush with blade profile.

_____ **Blade Inspection and Care:**
Refer to § 62-40. Inspect skins and doublers for scratches and corrosion. Inspect blades for dents, local deformations, and voids. As required, wax blades with soft cleaning cloths using carnauba-type wax (such as SC Johnson® Paste Wax). Ensure tip cover and blade tip drain holes are unobstructed. Verify placard legibility and remove old tracking tape and/or residue.

WARNING

Structural damage may occur if compressed air is applied to blade tip drain holes.

LANDING GEAR

_____ **Landing Gear Fairings (if installed):**
Open as required to access landing gear structure for inspection. Inspect condition. Verify no nicks, scratches, dents, cracks, corrosion, fretting, or loose rivets. Verify hose clamp security and acceptable general cleanliness of fairing interior. Close and secure fairings.

_____ **Skid Tubes & Shoes:**
Inspect condition. Verify skid tube and skid shoe wear is within limits specified in § 32-30 & 32-31. Verify drain holes are not obstructed. Verify security of rain caps; if rain cap is loose or damaged, verify no internal corrosion.

_____ **Struts Assemblies:**
Inspect condition. Verify no cracks or corrosion, especially at collar and gusset joints and in weld areas at bottom of struts. Torque-check strut-to-skid-tube bolts. Verify security.

_____ **Cross Tubes:**
Inspect condition. With helicopter on level ground, verify minimum tail skid height per § 32-20. Verify no cracks, corrosion, or fretting at elbows. Verify security of (clear plastic) rain caps; if rain cap is loose or damaged, verify no internal corrosion. (Note that one vent hole per cross tube is located near left or right end of tube to prevent pressurization.)

5-45 100-Hour / Annual Maintenance and Inspection [24 of 26 Pages]

LANDING GEAR

_____ **Landing Gear Attach Points:**
Inspect condition. Verify no buckling, cracks, fretting, or loose fasteners. Inspect mounts and verify no loose swages or worn bearings.

_____ **Fasteners & Torque Stripes:**
Inspect condition. Verify proper installation and security of fasteners. Renew deteriorated torque stripes per Figure 5-1.

_____ **D679 Cylinder assembly (Pop-out floats; if installed):**
Inspect condition. Verify security. Verify pressure gage indicates correct pressure for ambient temperature; refer to placard on cylinder for limits.

_____ **Inflation manifold (Pop-out floats; if installed):**
Inspect condition. Verify no chafing or pinching of hoses, especially where hoses pass though structure.

_____ **Float assemblies (Pop-out floats; if installed):**
Inspect condition of stowed floats. Verify no holes, cuts, tears, abrasion through or unraveling of, float covers. If cover damage is found, inflate and inspect floats per § 32-64. Annually apply A257-7 dry-film lubricant to float cover snap mating surfaces. Verify snaps and hook-and-loop fasteners are properly secured. Verify float-to-skid attachment security.

CABIN

_____ **General Interior:**
Inspect condition. Verify general cleanliness of cabin and seat compartment interior. Verify no loose objects or equipment, which could foul controls or injure occupants in a hard landing. Verify legibility of placards and markings. Verify serviceable condition of switches, knobs, handles, and other controls.

_____ **Seat Belts & Shoulder Harnesses:**
Inspect condition. Verify no fraying or broken stitching of seat belts or shoulder harnesses. Verify no significant UV damage. Check inertia reels for proper operation by pulling harness quickly to verify locking function. Check buckles for proper operation. Check belt and reel attachment points for security. Verify no cracks in seat belt anchor welds. Verify rear seat suspension straps are not stretched or otherwise damaged. Verify security.

NOTE
TSO tag not required on factory-installed harnesses.

_____ **Windshields & Windows:**
Inspect condition. Minor defects or imperfections that do not impair pilot visibility or indicate impending structural failure are acceptable. Refer to § 52-30 for damage and repair limits. Verify proper installation and security.

_____ **Static Ports:**
Inspect condition. Verify no obstructions.

CABIN (continued)

_____ **Yaw String:**
Inspect condition. Verify minimum string length is 3 inches on each side of clip. Verify security.

_____ **Landing & Taxi Lights:**
Inspect condition. Verify lens cleanliness, clarity, and security. Verify proper operation.

_____ **Landing Light Retainer & Support:**
Inspect condition. Verify no cracks where retainer mounts to support. Verify security.

_____ **Left & Right Navigation Lights:**
Inspect condition. Verify no cracks where right and left navigation lights mount to fuselage. Verify red left, green right, lens cleanliness, clarity, and security. Verify proper operation.

_____ **Exterior:**
Inspect condition. Inspect cabin exterior for nicks, scratches, dents, cracks, corrosion, fretting, or loose rivets. Loose rivets may be indicated by cracked paint and/or black residue around heads. Verify general cleanliness.

_____ **Doors:**
Inspect condition. Verify no cracks and proper fit of door-to-door frame. Verify no structural cracks near door hinges or latches. Verify proper operation of door latching and locking mechanisms. Ensure door hinge pins are secured with cotter rings. Verify security of hinge mounting screws. Verify proper installation and operation of gas struts and door vent assembly.

SPECIAL EQUIPMENT

_____ **Transmit and Intercom Switches:**
Verify proper operation of special transmit and intercom switches.

_____ **PA/Siren Speaker:**
Inspect condition. Verify no cracks in speaker. Verify security of mounting.

_____ **Wiring:**
Inspect condition. Verify no loose, chafed, or broken wires or terminals. Verify neatness, proper routing and installation, and security.

LIFE-LIMITED PARTS, PARTS WITH A RECOMMENDED TBO OR REPLACEMENT TIME, ADs, & SBs

_____ **Life-Limited Parts:**
Refer to § 4-10. Verify life-limited parts correspond with aircraft maintenance records. Verify life-limited parts have sufficient time remaining for projected operations.

_____ **Parts with a Recommended Time Between Overhauls (TBO) or Replacement Time**:
Refer to § 4-20. Verify parts with a recommended TBO or replacement time correspond with aircraft maintenance records. Verify parts with a recommended TBO or replacement time have sufficient time remaining for projected operations.

LIFE-LIMITED PARTS, PARTS WITH A RECOMMENDED TBO OR REPLACEMENT TIME, ADs, & SBs

_____ **Airframe and Engine Accessories:**
Refer to § 4-20 and accessory manufacturer's maintenance publications. Verify accessories correspond with aircraft maintenance records. Verify accessories scheduled for maintenance have sufficient time remaining for projected operations.

_____ **Airworthiness Directives:**
Verify applicable airframe, engine, and accessory Airworthiness Directives (ADs) have been performed according to AD compliance procedures. Some helicopters may be affected by ADs that require recurring inspections at less than 100-hour or annual intervals. Recent U.S. Airworthiness Directives are online at www.faa.gov.

_____ **Service Bulletins and Letters:**
Verify applicable airframe, engine, and accessory Service Bulletins (SBs) and Service Letters (SLs) have been complied with according to manufacturers' instructions. Some helicopters may be affected by SBs or SLs that require recurring inspections at less than 100-hour or annual intervals. RHC Service Bulletins and Service Letters are online at www.robinsonheli.com under the Publications tab.

REQUIRED DOCUMENTS AND PLACARDS

_____ **Documents**:
Check that required documents (Airworthiness Certificate, Registration, applicable Radio Station License, Pilot's Operating Handbook, Equipment List/Weight & Balance Data) are onboard, legible, and current.

_____ **Placards**:
Verify required placards are properly installed, legible, and current. Refer to Pilot's Operating Handbook Section 2 for placard requirements.

INSPECTION AND ACCESS COVERS

_____ **Foreign Objects Removed:**
Verify all tools, loose hardware, rags, and other foreign objects are removed from helicopter.

_____ **Covers Closed and Secure:**
Refer to Section 6-70. Install/close inspection and access covers and cowlings removed in preceding steps. Verify proper installation and security.

MAINTENANCE RECORDS

_____ **Maintenance Records:**
Verify maintenance records are accurate, legible, and complete. Enter maintenance performed (such as part replacement, equipment adjustments, servicing, and lubrication) and inspection data. Data must include a description of (or reference to data acceptable to the Administrator) the work performed, date, helicopter total time in service, signature, certificate type and certificate number of person approving helicopter for return to service.

Inspection Procedures and Checklist completed:

Mechanic's signature: _____ Date: _____

5-50 2000-Hour Maintenance and Inspection

NOTE

Fuel bladder is on condition.

1. Order one R8480 2000-Hour Maintenance and Inspection Kit from any R66 Dealer or Service Center.

2. Refer to helicopter maintenance records and § 4-10. Replace life-limited parts as required.

3. Refer to helicopter maintenance records and § 4-20. Replace parts with a recommended TBO and parts with a recommended replacement time as required. Replace engine and accessories scheduled for maintenance as required.

4. Visually inspect vertical stabilizers. Verify no cracks, corrosion, loose rivets, dents, or deformation.

5. Remove fuel bladder per § 28-10. Visually inspect. Verify no corrosion, residue, microbial growth, or damage to fabric. Visually inspect adjacent structure for evidence of bladder leakage. Replace roll-over vent valve o-rings and packings per § 28-11. Remove any foreign object debris. Install bladder per § 28-10.

6. Perform (engine driveline) forward flex plate shimming per § 63-11 and (tail rotor driveline) intermediate flex plate shimming per § 65-30.

7. Fill and bleed hydraulic system per § 12-34 as required.

8. Perform main rotor flight control and blade angle rigging per §§ 18-30 and 18-40.

9. Perform tail rotor flight control and blade rigging per §§ 18-50 and 18-60.

10. If installed, perform leak check of air conditioning system per § 12-83.

11. Perform 100-Hour / Annual Maintenance and Inspection per § 5-45.

12. Weigh helicopter per § 8-20.

13. Balance tail rotor per § 18-20. Track and balance main rotor per § 18-10. Perform flight checks per § 5-43.

14. Drain and flush tail rotor gearbox per § 12-23.

15. Make appropriate maintenance record entries. Enter maintenance performed (such as part replacement, equipment adjustments, weighing, servicing, and lubrication) and inspection data. Data must include a description of (or reference to data acceptable to the Administrator) the work performed, date, helicopter total time in service, signature, certificate type and certificate number of person approving aircraft return to service.

5-55 12-Year Maintenance and Inspection

[Reserved]

Intentionally Blank

5-60 Special Maintenance and Instructions

WARNING

Do not install or return to service any part removed from a damaged aircraft unless the part can be verified as undamaged. Return suspect parts to RHC, with details of damage history, for airworthiness evaluation.

5-61 Tail Skid Strike

A. If evidence of scuffing is found on the tail skid, inspect the rotorcraft as follows:

1. Visually inspect tail rotor blades for evidence of solid object or ground contact. If tail rotor damage is found, inspect tail rotor for strike per § 5-62. _____
2. Visually inspect vertical stabilizer for evidence of buckling, cracks, or loose rivets at tail skid and at lower vertical stabilizer-to-horizontal stabilizer attach points. _____
3. Visually inspect tail rotor guard for bending or cracking at attach mounts. _____
4. Visually inspect the horizontal stabilizer-to-tailcone attach points for evidence of buckling, loose rivets, or cracking. _____
5. Visually inspect tailcone for damage and tailcone-to-upper steel tube structure attach points for buckling and loose attach bolts. _____

B. For skid bending or breakage, or buckling of lower vertical stabilizer, perform the following inspections in addition to those listed in Step A.

1. Perform tail rotor drive shaft runout per § 65-21. _____
2. Remove tailcone assembly per § 53-40. Perform dye penetrant inspection of F020 upper frame at tailcone attach points per § 5-66. _____
3. Visually inspect tailcone attachment points for elongated holes (0.454-inch diameter maximum). _____
4. Remove empennage assembly per § 53-50. Remove tail rotor gearbox per § 65-40. Remove paint from tailcone casting using a suitable paint remover per § 20-70. Dye penetrant inspect casting according to manufacturer's instructions. _____
5. Visually inspect horizontal stabilizer attach points for elongated holes (0.386-inch diameter maximum) loose rivets or buckling. _____
6. Remove lower vertical stabilizer per § 53-51. Visually inspect attach points on vertical and horizontal stabilizers for elongated holes (0.266-inch diameter maximum); verify no buckling, cracks or loose rivets. Loose rivets may be drilled out and replaced. _____
7. Remove tail rotor guard per § 53-53. Remove paint from forward and aft attachment points and dye penetrant inspect according to manufacturer's instructions. Remove guard mount from tailcone by removing four 10-32 screws and dye penetrant inspect same as above step. _____

5-62 Tail Rotor Strike

The tail rotor strike inspection is listed in two parts. Part 1 concerns damage received by a tail rotor blade due to contact with a small stone, tall grass, or some small object contacting rotor blade in free air. Part 2 is concerned with sudden stoppage of tail rotor due to ground or solid object contact causing bending or shearing of a tail rotor blade or blades.

1. Inspect tail rotor blades per § 64-30 and perform Part 2, step (a).

2. If one or both tail rotor blades contact ground or a solid object causing bending or shearing of blades a tail rotor sudden stoppage inspection must be performed. Inspect per following procedure:

   a. Perform tail rotor drive shaft runout per § 65-21. If runout exceeds 0.025 inch at any location the shaft must be replaced or repaired.

   b. Remove tail rotor assembly per § 64-10 and tail rotor gearbox per § 65-40 and return to RHC.

   c. Visually inspect D224 tail rotor drive shaft for evidence of twisting, nicks, dents or scratches. Nicks and scratches may be polished out to a maximum of 0.003 inch deep. Evidence of twisting or dents is cause for replacement of the drive shaft.

   d. Remove yokes from each end of tail rotor drive shaft. Inspect arms for deformation and holes for any elongation. Strip paint and dye penetrant inspect yokes according to manufacturer's instructions (forward yoke may be magnetic particle inspected).

   e. Remove F196-1 (tail rotor drive) shaft weldment per § 65-10. Strip paint back at least 2 inches from welds at both ends of shaft and dye penetrant or magnetic particle inspect. Verify no cracks.

   f. Replace C947-3 plate assemblies (forward, intermediate, and aft).

   g. Visually inspect F193-2 hanger and F172-3 (bearing) housing for cracks or deformation.

   h. Visually inspect tailcone and empennage for evidence of a tail rotor blade strike.

   i. Visually inspect main rotor system.

5-63 Main Rotor Strike

The main rotor strike inspection is listed in two parts. Part 1 concerns contact of main rotor blades with object in free air such as small stones, brush, small birds, etc. Part 2 is concerned with sudden stoppage of main rotor due to ground or solid object contact.

1. If main rotor blade has contacted a small object in free air such as small stones, brush, small birds, etc., inspect main rotor blades as follows:

   a. Verify any nicks, scratches, and dents are within § 62-10 limits; repair as required.

   b. Visually inspect trailing edge of blade for evidence of buckling or bending. This will be most evident near root of blade.

> **CAUTION**
>
> Any blade buckling or permanent bending is considered sudden stoppage and requires a sudden stoppage inspection of the entire rotorcraft.

2. If main rotor blade or blades have contacted ground or a solid object, they must be inspected for sudden stoppage. Sudden stoppage is evident when buckling or bending of the main rotor blades has occurred. Use the following procedure for inspecting rotorcraft after main rotor sudden stoppage has occurred:

   a. Perform tail rotor drive shaft runout per § 65-21.

   b. Visually inspect G027 scroll assembly and F193 bearing hanger for cracks and/or deformation.

   c. Remove the following components and return to RHC for inspection.

      C005-10 Main Rotor System
      F006 Main Rotor Gearbox
      F018 Clutch Assembly
      A947-2 Flex Plates
      C947-3 Flex Plates
      C017 Swashplate
      F906 Yoke
      F908 Yoke
      F910 Yoke
      F196 Shaft Weldment
      F642 Shaft Weldment
      G174 Fanwheel

   d. Inspect engine for sudden stoppage per engine manufacturer's instructions.

5-64 Rotor/Engine Overspeed

1. For rotor overspeeds between 106 and 112%:

> NOTE
>
> Refer to Part 3 if a power-on overspeed occurs.

   a. Check main rotor and tail rotor dynamic balance. Compare pre-overspeed and post-overspeed balance.

> CAUTION
>
> Any change in rotor dynamic balance greater than 0.3 ips requires inspection per Part 2.

   b. Remove main rotor blades. Drain pitch bearing housings. Remove outer blade boot clamps and fold boots away from pitch horns. Rotate spindles to verify no brinelling of pitch bearings.

> NOTE
>
> Bearings have a high preload; slight drag is normal. If roughness is evident, return blade and spindle assembly to RHC for repair.

   c. Visually inspect main and tail rotor blades.

   d. Check tail rotor drive shaft runout per § 65-21.

2. If an overspeed at or above 112% is reported or suspected or if balance changes or pitch bearing roughness is evident, perform following inspections in addition to Part 1.

> NOTE
>
> Refer to Part 3 if a power-on overspeed occurs.

   a. Perform Part 1 inspection.

   b. Check coning hinge bolts for evidence of bending. Replace any bent bolts.

   c. Coning hinge bolts, washers, and journals must be magnetic particle inspected. Replace any cracked bolts, journals or washers.

   d. Visually inspect hub and dye penetrant inspect any areas suspected of having cracks. Dye penetrant inspect according to manufacturer's instructions.

   e. Reinstall blades and check balance. If a change in balance is evident, rotor system should be returned to RHC for inspection and/or repair.

3. Refer to RR300 Series Operation and Maintenance Manual (OMM) for overspeed inspection requirements.

Intentionally Blank

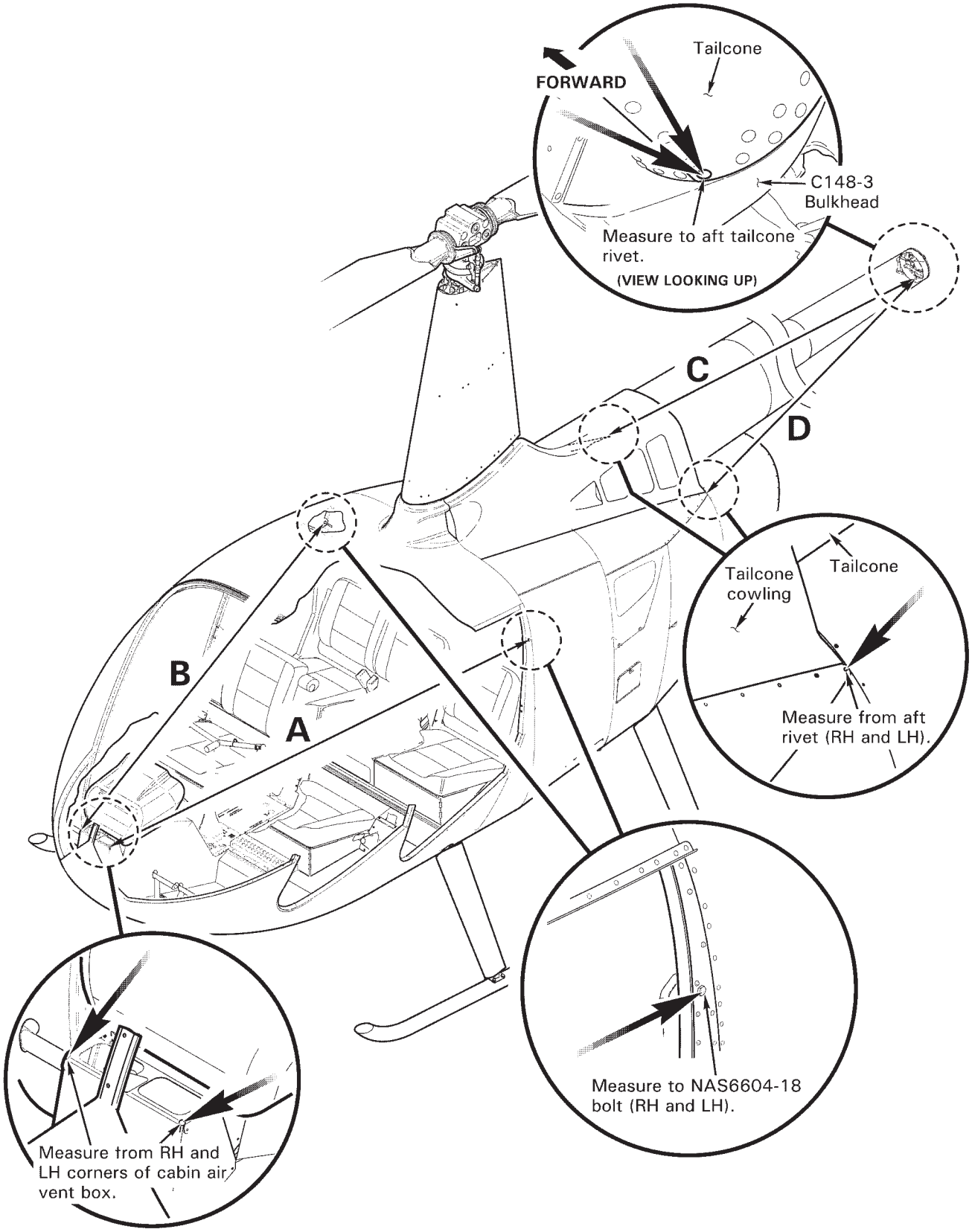

FIGURE 5-5 SYMMETRY CHECK

5-65 Hard Landing

NOTE

RR300 Operation and Maintenance Manual requires special engine inspection (subtask 05-50-00-210-002) when a hard landing exceeds 10g. While there is no single indicator for a 10g impact, an impact was less than 10g if there was no contact between the fuselage belly or landing gear cross tubes and the ground. Yielding or buckling of any engine mount tubes or crushing of the energy absorbers within any occupied seat indicates the impact was likely greater than 10g.

The hard landing inspection is listed in two parts. Part 1 concerns yielding (bending) of the cross tubes due to hard landing such as hovering autorotations or run-on landings that do not apply side loads to the landing gear. Part 2 concerns hard landings that, in addition to yielding of cross tubes, have yielding of steel tube frames or fuselage primary structure.

NOTE

Buckling and bent steel tube structure are evidence of side loads on the airframe.

1. Yielding of cross tube due to hard landing with no side loads:
   a. Perform tail rotor drive shaft runout per § 65-21.
   b. Visually inspect main rotor blades for oil canning of skins and buckling. Inspect and repair main rotor blades per §§ 62-40 and 62-50.
   c. Check landing gear cross tubes for yielding beyond serviceable limit. Place rotorcraft on level ground, push up on tail rotor gearbox and release, allowing rotorcraft to settle, then measure from tip of tail skid to ground. If less than 38 inches, one or both cross tubes must be replaced.
   d. Inspect front seat structure for yielding. Visually inspect, thru vent holes in seat bottoms, the internal box structure for any deformation. Inspect aft seat structure for yielding.
2. If yielding of steel tube frame(s) OR fuselage has occurred, inspect rotorcraft as follows:
   a. Perform Part 1 inspection.
   b. Verify no yielding or cracks in steel tube frames.
   c. Visually inspect fuselage, landing gear attach points, and firewalls for buckling or cracks.
   d. Dye penetrant inspect upper steel tube structure and all welded joints.

5-65 Hard Landing (continued)

2. e. Visually inspect tailcone for buckling or loose rivets.

   f. Visually inspect landing gear skid tube-to-strut attach points for bending and cracks.

   g. Hard landings can be accompanied by tail skid strikes, tail rotor strikes, main rotor blade strikes, etc. To inspect for these conditions, refer to the appropriate instructions in § 5-60. Refer to § 53-11 for cabin repairs. Any cracks, yielding or buckling in steel tube structure or tailcone are cause for replacement.

   h. Replace parts as required.

   i. Check for symmetry if there is evidence of buckling of the cabin assembly per Figure 5-5. Position helicopter on a hard, level surface with the weight of the helicopter settled on the skids. Measure and record distances of lines A, B, C, and D. Verify the difference between lines A & B is not more than 0.30 inch and the difference between lines C & D is not more than than 0.40 inch. If the difference between lines A & B or C & D is greater than the limits given, the cabin assembly must be returned to RHC for repair.

Intentionally Blank

5-66 Dye Penetrant Inspection of F020-1 Upper Frame

1. Carefully clean all paint, primer, oil, grease, etc from steel tube structure around and adjacent to four tailcone mounts.
2. Apply epoxy paint remover and allow the softening action to complete (temperature affects time required).
3. Remove softened paint by hand using a wire brush. Be sure steel structure is perfectly clean before application of dye penetrant.
4. Carefully check for cracks in and around each weld bead and along each steel supporting tube for at least two inches away from weld beads. Replace any frame exhibiting crack indications.
5. If no cracks are found, clean all inspection materials from steel tubing.
6. Prime with good quality zinc chromate or epoxy primer and allow adequate drying time.
7. Refinish area with gray epoxy top coat or equivalent.

5-67 Corrosion on F020-1 Upper Frame

1. Polish out corrosion on steel frame tube members.
   a. Polish out light surface corrosion on frame members using Scotchbrite or 400 grit wet-or-dry sandpaper. Verify 0.002 inch maximum depth after rework.
   b. Polish out corrosion pitting using 320-grit wet-or-dry sandpaper. Verify 0.004 inch maximum depth and 0.10 inch maximum diameter, after rework.

NOTE
For large areas of corrosion, it may be necessary to remove entire upper frame from aircraft and strip off paint to adequately determine extent of damage.

2. Prime bare metal with a good quality zinc chromate or epoxy primer.
3. Refinish area with gray epoxy top coat or equivalent.

5-68 Main Rotor Gearbox Overtemp Illumination

If the gearbox overtemp annunciator segment illuminates, remove main rotor gearbox per § 63-20 and return to RHC.

NOTE
Light illuminates at 240 ± 5ºF.

5-69 Main Rotor Gearbox (MR) Chip Light Illumination

If the MR CHIP annunciator segment illuminates:

1. Remove main rotor gearbox chip detector per § 12-13. Inspect any particles found on the chip detector. Examine the particles and perform following appropriate corrective action:

   a. For fuzz particles: Clean chip detector with compressed air or toothbrush (do not use magnet) and reinstall per § 12-13. Normal wear, especially new gearboxes, will produce fine fuzz.

   b. For flake particles or slivers longer than 0.12 inch or wider than 0.02 inch: Clean chip detector. Replace gearbox filter per § 12-12. Visually examine old filter with 10X magnification; return gearbox to RHC if metallic debris is detected.

   c. For large ferrous chips or chunky particles: Remove gearbox per § 63-20 and return to RHC. Return chips and/or particles if possible.

5-70 Tail Rotor Gearbox (TR) Chip Light Illumination

If the TR CHIP annunciator segment illuminates:

1. Drain the gearbox per § 12-21, straining the oil through a 190-micron (or finer) paint filter into a clean container.

2. Inspect any particles found in the paint filter or on the chip detector. Examine the particles for size; any particles larger (0.09 inch long or 0.02 inch wide) than fine fuzz (normal wear) should be identified as ferrous or non-ferrous by using a magnet. If particles are ferrous, remove tail rotor gearbox per § 65-40 and return it to RHC.

5-71 Main Rotor Gearbox Filter Bypass Indicator

NOTE
Extremely cold temperatures may cause the bypass to activate.

If the main rotor gearbox filter bypass indicator button continues to activate after two consecutive resets (at operating temperature), perform the following:

1. Service filter per § 12-12. Examine filter for particles.

   a. If filter is clean, replace (Purolator-Facet P/N) 1740839 bowl assembly or F651-1 filter assembly.

   b. If filter is contaminated, return main rotor gearbox to RHC for overhaul, replace main rotor gearbox oil cooler and flush oil lines.

5-72 Lightning Strike

Lightning strikes are extremely rare for helicopters operating in VFR conditions.

If a lightning strike does occur, RHC recommends performing a 100-hour inspection per § 5-45 and performing the inspection for lightning strike damage per Rolls-Royce RR300 Operation and Maintenance Manual (OMM).

High voltage that is well conducted through the aircraft structure will dissipate and cause minimal damage. High voltage that is not well conducted through the aircraft structure can result in excessive heat, which can bake, burn, char, or even melt certain materials. Heat damage may or may not be detectable by visual inspection. A component may not exhibit obvious damage, but temperatures above 300º F can alter the strength of some materials and thus affect a component's service life and airworthiness.

Visually inspect main rotor blades, landing gear, drive train, airframe, and flight controls thoroughly for obvious damage such as electrical arcing or burns, pitting, or cracking. Particular attention should be given to rod ends, journals, etc., where the conductive path is most susceptible. If obvious damage is detected in any of the above-mentioned systems, additional components may require replacement. Contact RHC Technical Support with detailed documentation for further guidance prior to approving aircraft for return to service.

5-73 Pop-Out Float-Equipped Helicopter Water Landing with Tail Rotor Contact

1. Clean tail rotor blades, hub, and airframe exterior with a mild soap and water solution per Chapter 20.

CAUTION

Do not spray main rotor hub, tail rotor gearbox vent, hydraulic reservoir vent, swashplate area, or bearing seals with high-pressure water or solvent as water or solvent may cause corrosion or breakdown of lubricants. See RR300 Series Operation and Maintenance Manual (OMM) for engine cleaning instructions and precautions.

2. Inspect tail rotor blades per § 64-30; inspect trailing edges for buckling, and leading edges for bending. If either blade is damaged, remove tail rotor assembly per § 64-10 and tail rotor gearbox per § 65-40 and return components to RHC.
3. Perform tail rotor drive shaft runout per § 65-21. If runout exceeds 0.025 inch at any location:
   a. Remove tail rotor drive shaft assembly per § 65-20 and return drive shaft to RHC.
   b. Visually inspect F193-2 hanger and F172-3 (bearing) housing for cracks or deformation.
   c. Replace C947-3 plate assemblies (forward, intermediate, and aft).

CHAPTER 6

DIMENSIONS AND DESCRIPTIONS

Section	Title	Page
6-10	Version Description	6.1
6-20	Datum	6.1
6-30	Method of Measurement	6.1
6-40	External Dimensions	6.3
6-50	Baggage Compartment Dimensions	6.4
6-60	Station Diagrams	6.6
6-61	Fuselage Station (FS) Locations	6.6
6-62	Tailcone Station (TS) Locations	6.7
6-63	Water Line (WL) Station Locations	6.8
6-64	Butt Line (BL) Station Locations	6.9
6-70	Access and Inspection Panels	6.10
6-71	B526 Screws and B527-08 Washers	6.10
6-80	Antenna Locations	6.11

Intentionally Blank

CHAPTER 6

DIMENSIONS AND DESCRIPTIONS

6-10 Version Description

Refer to Section 4-20 for Type Certificate Data Sheet.

R66, Turbine: Five place, single-engine, single main rotor, light turbine helicopter. Two-bladed teetering main rotor system with conventional two-bladed tail rotor. Rolls-Royce model 250-C300/A1 turboshaft engine normally rated at 300 shaft horsepower (SHP); 270 SHP 5-minute take-off rating. Maximum gross weight 2700 pounds. Primary fuel is Jet-A (see R66 Pilot's Operating Handbook); 74.6 US gallon fuel tank capacity.

6-20 Datum

The datum is located 100 inches forward of main rotor centerline.

6-30 Method of Measurement

Fuselage station, tailcone station, water line station, and butt line station values are measured in inches, rounded to the nearest hundredth.

Intentionally Blank

6-40 External Dimensions

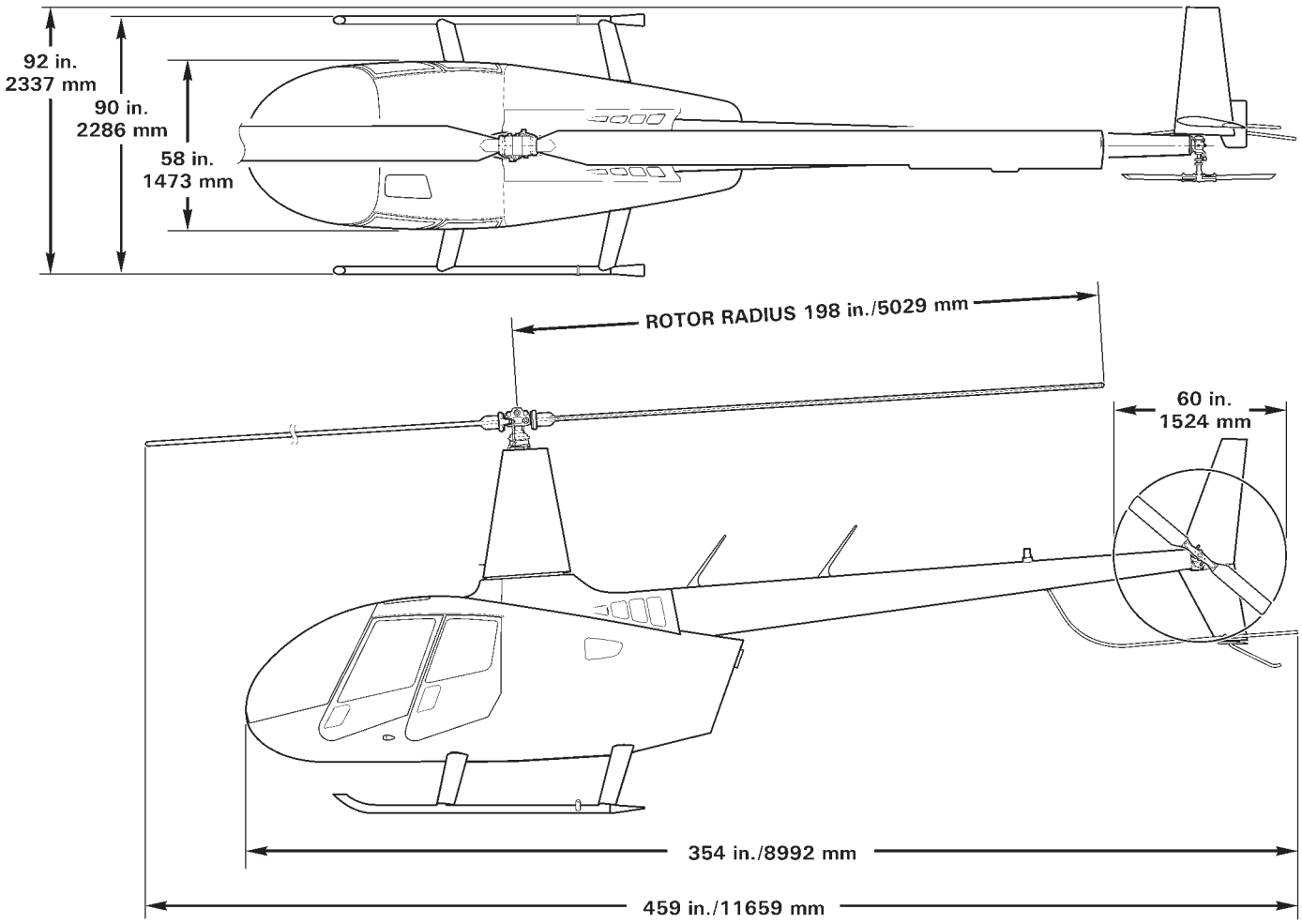

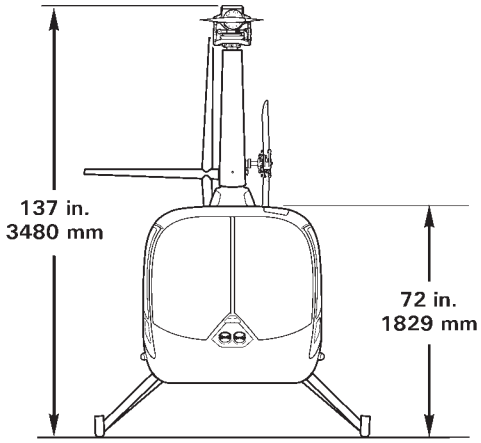

R66 TURBINE

EXTERNAL DIMENSIONS

FIGURE 6-1 EXTERNAL DIMENSIONS

6-50 Baggage Compartment Dimensions

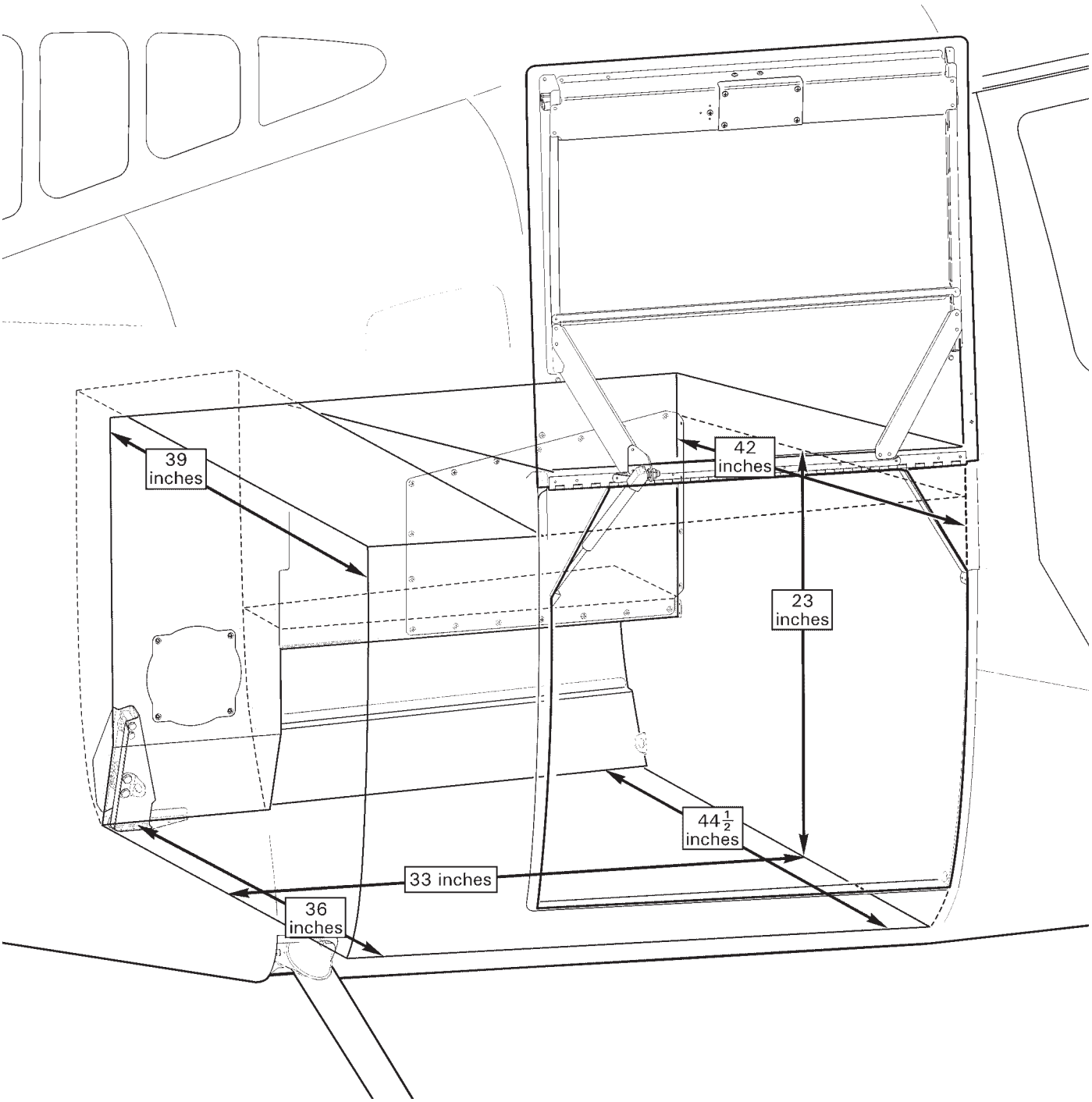

FIGURE 6-2 BAGGAGE COMPARTMENT INTERIOR DIMENSIONS
(Dimensions given are approximate)

6-50 Baggage Compartment Dimensions (continued)

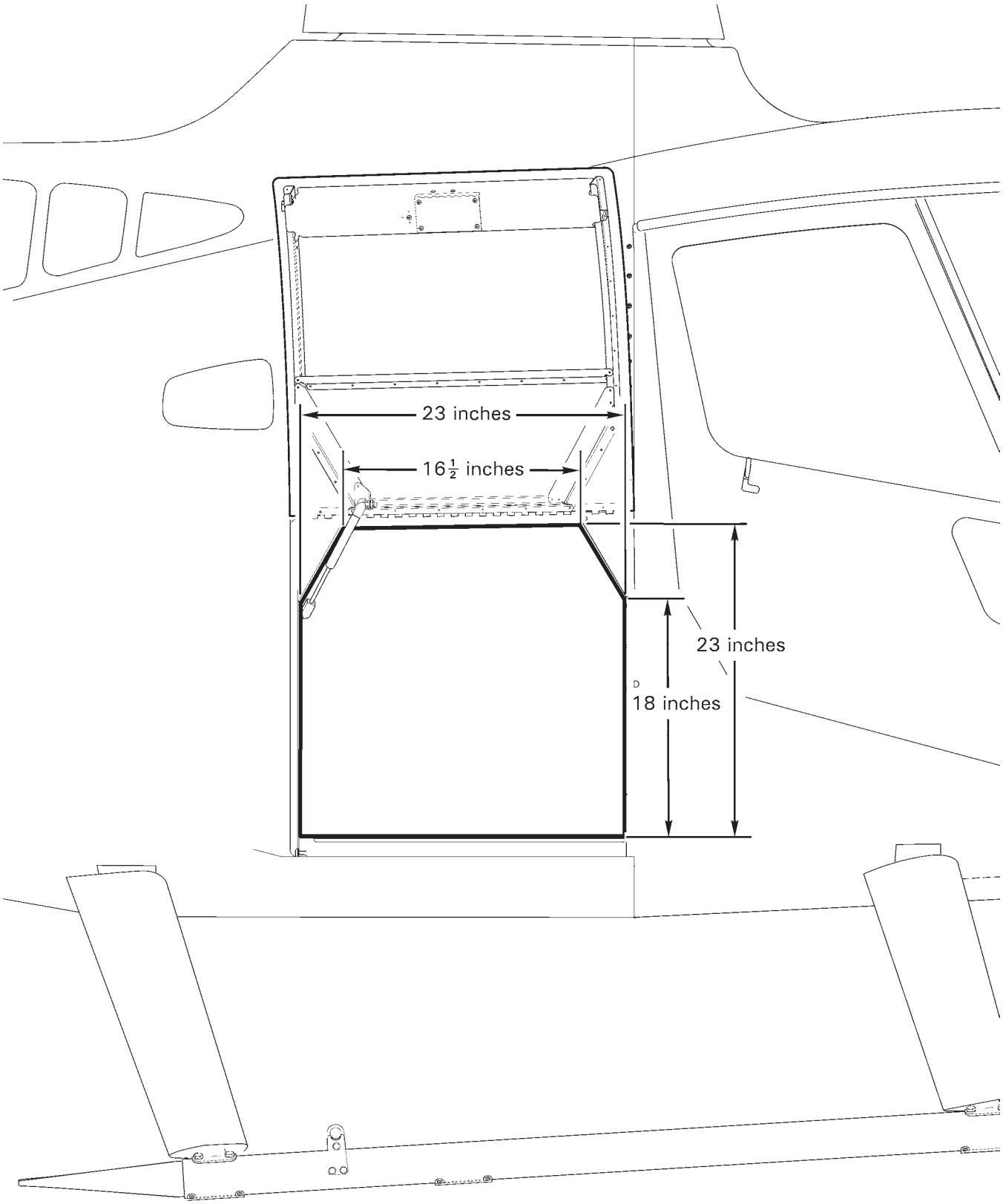

FIGURE 6-3 BAGGAGE COMPARTMENT ACCESS DIMENSIONS
(Dimensions given are approximate)

6-60 Station Diagrams

6-61 Fuselage Station (FS) Locations

1	Datum	FS 0.00
2	Nose Bracket (tie-down)	FS 2.36
3	Ground Handling Ball (center point, bottom)	FS 32.67
4	Seat Box Assembly - Forward (front wall)	FS 39.50
5	Seat Box Assembly - Aft (front wall)	FS 69.30
6	Cross Tube - Forward (centerline, at strut)	FS 71.56
7	Baggage Compartment (forward wall)	FS 92.00
8	Main Rotor Drive Shaft (centerline)	FS 100.00
9	Fuel Cell - Structure (aft wall)	FS 115.00
10	Engine Firewall - Vertical	FS 125.00
11	Cross Tube - Aft (centerline, at strut)	FS 127.35
12	Skid Extension (aft edge)	FS 134.78
13	Engine Cowling (aft point)	FS 171.45

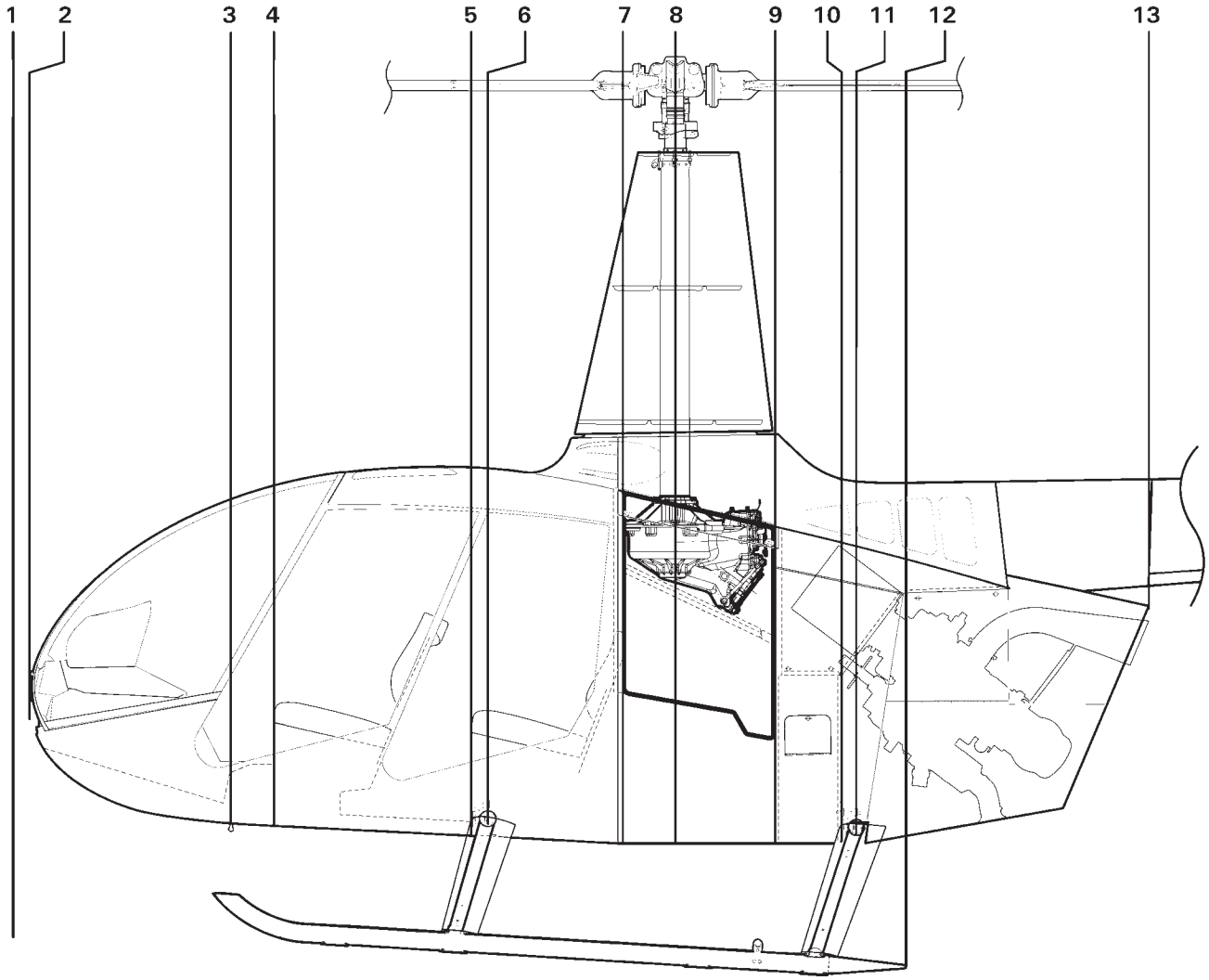

FIGURE 6-4 FUSELAGE STATION LOCATIONS

6-62 Tailcone Station (TS) Locations

> **NOTE**
>
> Typical angle between tailcone station lines & skin aft edges is 4°30′ from longitudinal centerline. Forward edge of C023-6 skin & aft edge of C023-12 skin are (true) tailcone station lines.

1	Forward Edge C023-6 Skin	TS 0.00
2	Aft Edge C023-6 Skin & Tailcone Centerline Intersection	TS 25.00
3	Aft Edge C023-7 Skin & Tailcone Centerline Intersection	TS 51.00
4	Aft Edge C023-8 Skin & Tailcone Centerline Intersection	TS 74.00
5	Aft Edge C023-9 Skin & Tailcone Centerline Intersection	TS 98.00
6	Aft Edge C023-10 Skin & Tailcone Centerline Intersection	TS 122.00
7	Aft Edge C023-11 Skin & Tailcone Centerline Intersection	TS 146.00
8	Aft Edge C023-12 Skin	TS 177.30
9*	Tail Rotor Gearbox (centerline)	FS 327.00

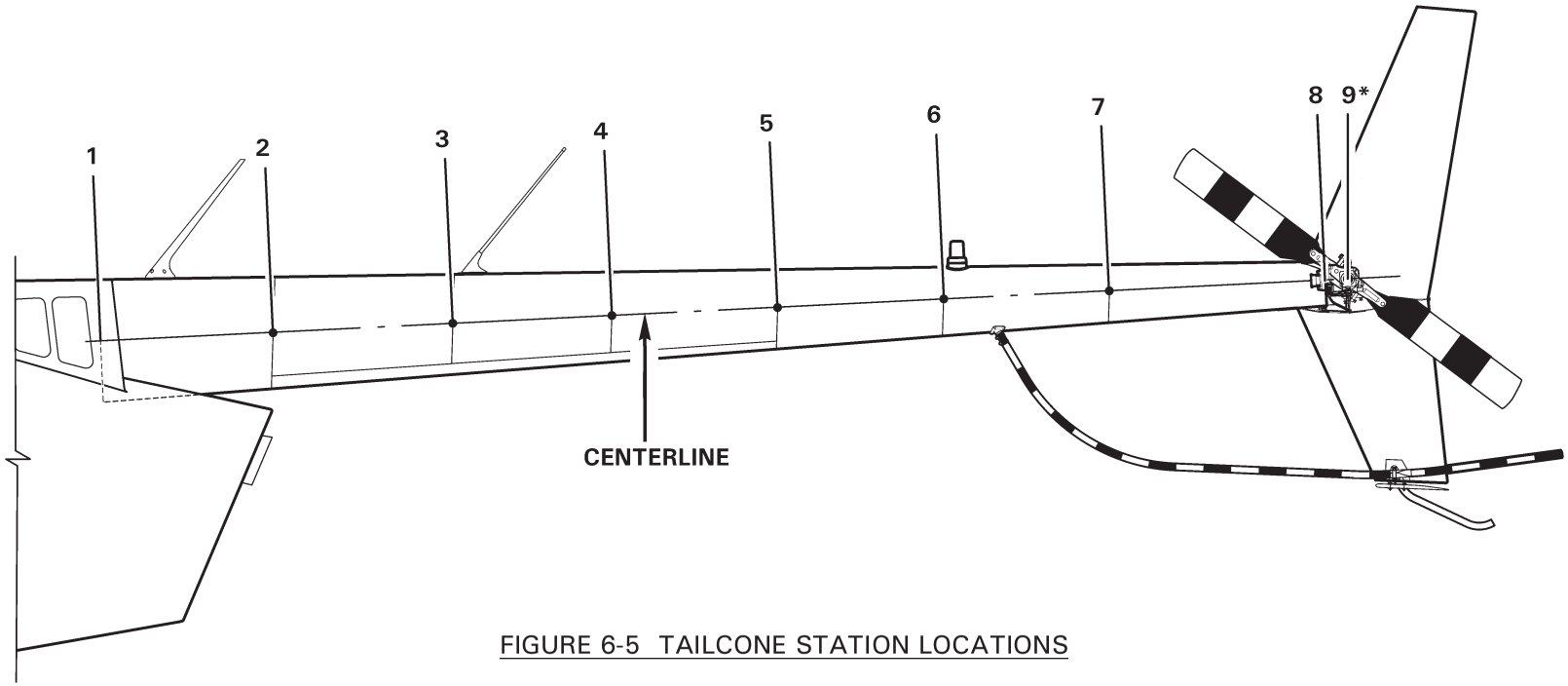

FIGURE 6-5 TAILCONE STATION LOCATIONS

6-63 Water Line (WL) Station Locations

1	Teeter Hinge Bolt (main rotor)	WL 138.00
2	Upper Rib (top)	WL 125.17
3	Middle Rib (top)	WL 104.88
4	Lower Rib (top)	WL 84.59
5*	Tail Rotor Gearbox (centerline)	WL 75.50
6	Main Rotor Gearbox (tail rotor and main rotor drive shaft intersection point)	WL 66.00
7	Baggage Compartment (ceiling, lowest point)	WL 45.60
8	Baggage Compartment (floor)	WL 22.59
9	Belly	WL 20.78
10	Landing Gear	WL 0.79
11	Origin	WL 0.00

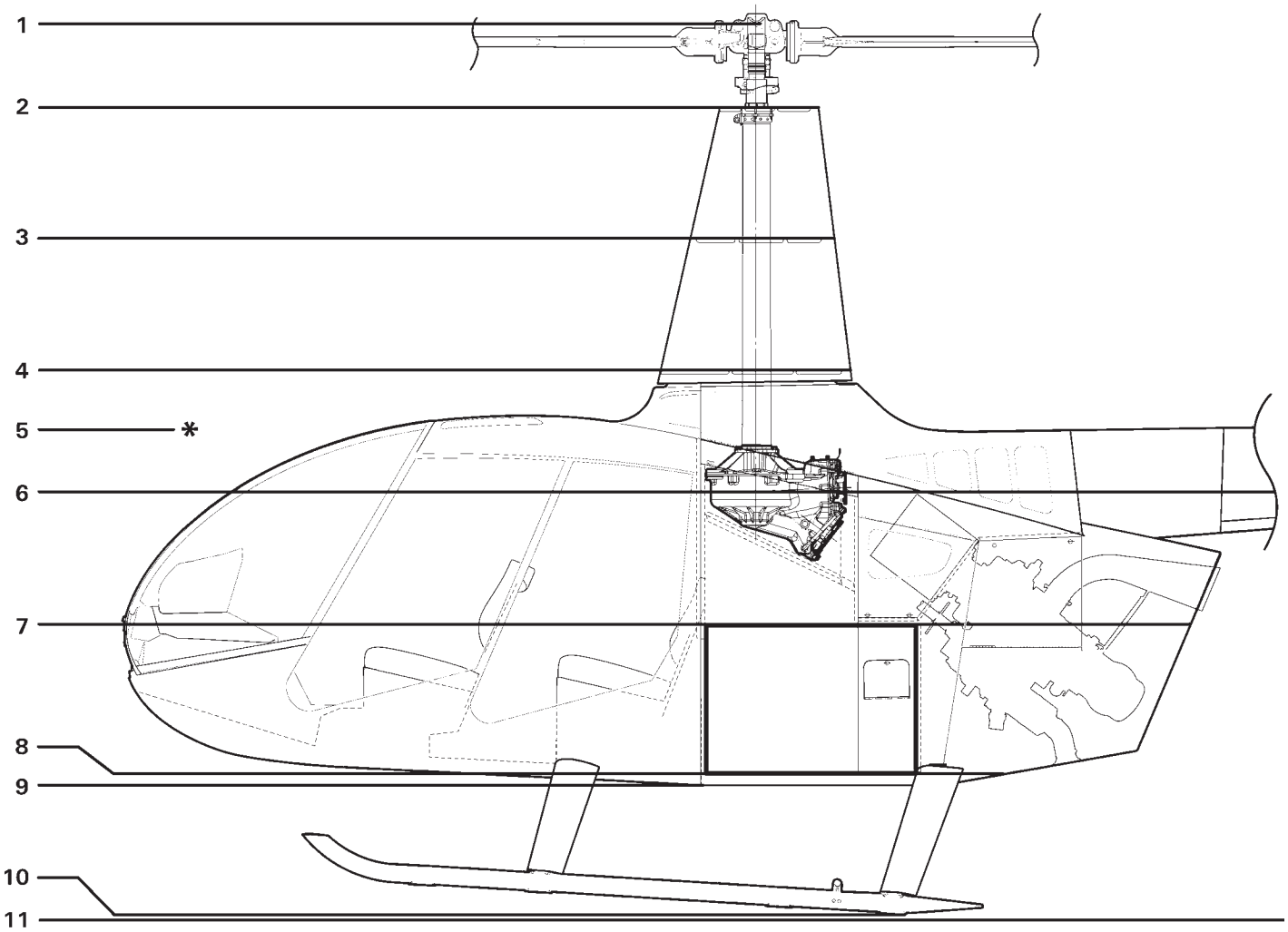

FIGURE 6-6 WATER LINE STATION LOCATIONS

6-64 Butt Line (BL) Station Locations

1	Horizontal Stabilizer (outboard point)	HS 43.00
2	Skid Tube (centerline)	BL 42.00
3	Door Post (between forward & aft doors)	BL 28.25
4	Jack Lug/Tab (aft strut assembly)	BL 16.73
5	Ground Handling Ball (jack point)	BL 4.13
6	Origin	BL 0.00
7	Teeter Hinge Bolt (tail rotor)	LBL 11.01
8	Jack Tab (aft strut assembly)	LBL 16.73

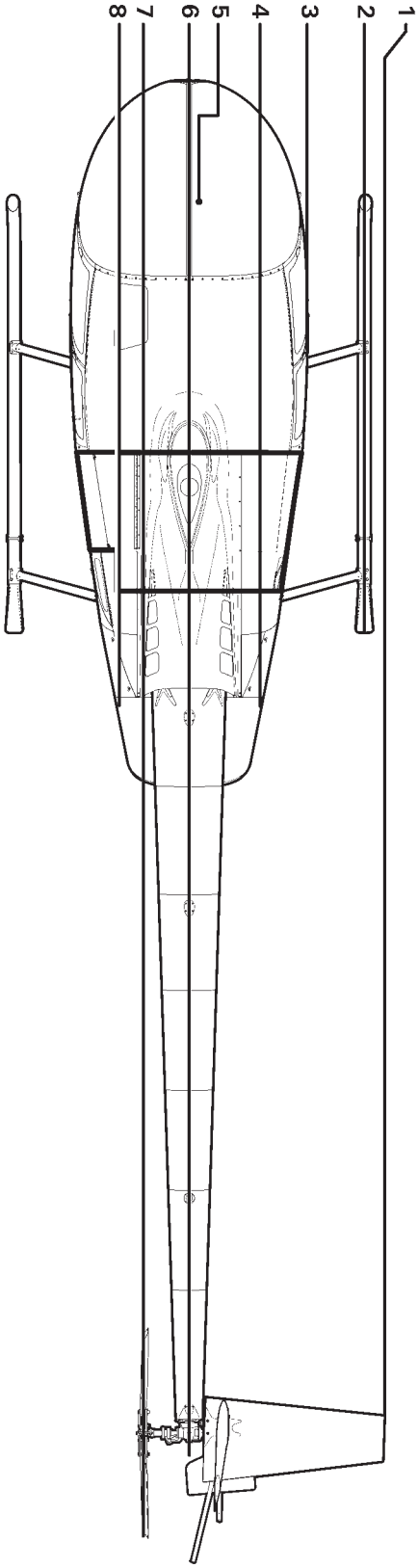

FIGURE 6-7 BUTT LINE STATION LOCATIONS

6-70 Access and Inspection Panels

Refer to R66 Illustrated Parts Catalog Chapter 6 for access and inspection panel locations.

6-71 B526 Screws and B527-08 Washers

B526 (TORX Plus®) truss head screws may be used to secure cowlings and access panels. A B527-08 nylon washer may be used under a B526 screw head to further protect thin or painted surfaces.

B526 screws are interchangeable with MS27039C080_ screws used to secure cowlings and access panels as follows:

PART:	INTERCHANGEABLE WITH:
MS27039C0806 screw	B526-6 screw
MS27039C0807 screw	B526-8 screw
MS27039C0808 screw	B526-8 screw

B526 screws are interchangeable with AN525-832R_ & AN526C832R_ screws as follows:

PART:	INTERCHANGEABLE WITH:
AN525-832R6 or AN526C832R6 screw	B526-6 screw
AN525-832R7 or AN526C832R7 screw	B526-8 screw
AN525-832R8 or AN526C832R8 screw	B526-8 screw

NOTE

B526 screws are compatible with T20 or 20IP drivers.

6-80 Antenna Locations

ITEM	ANTENNA	MHz	PART NO.
1	Glidescope	—	CI 193
2	ADF	—	KA44B
3	Marker Beacon	—	CI 102
4	RH Belly UHF	400-960	CI 285
5	DME	—	CI 105-16, KA60
	Transponder	—	CI 105-16, KA60
	ADS-B	—	CI 105-16, KA60
6	LH/RH Belly (Ref)	—	See items 8 and 9
7	Transponder	—	CI 105-16, KA60
8	RH Belly FM	138-174	CI 292-3
		450-470	CI 177-20
	RH Belly AM/FM	—	CI 222
	RH Belly FM	403-512	CI 273, CI 272-1, CI 271
9	LH Belly FM	138-174	CI 292-3
		450-470	CI 177-20
		220-225	D721-1
	LH Belly FM	403-512	CI 273, CI 272-1, CI 271
	LH Belly COM	118-136	CI 122
10	NAV	108-118 & 329-335	D20543 (VOR & LOCALIZER)
		108-118 & 329-335	D20543 (VOR & LOCALIZER W/DIPLEXER)
11	ELT	—	AV-300
12	Cowling GPS	—	GA 35
	Cowling XM	—	GA 55
13	Upper Fwd COM	—	CI 121, CI 248-5
	Upper Fwd FM	—	CI 177
	Upper Fwd FM	403-512	CI 273, CI 272-1, CI 271
		800-870	CI 306
	Upper Fwd COM/GPS	—	CI 2580-200
14	Upper Mid RSM/GPS	—	921-00003-001
15	Upper Aft COM	—	CI 121, CI 248-5
	Upper Aft FM	—	CI 177
	Upper Aft FM	403-512	CI 273, CI 272-1, CI 271
	Upper Aft COM/GPS	—	CI 2580-200
16	Lower Fwd FM	—	CI 177
	Lower Fwd FM	403-512	CI 273, CI 272-1, CI 271
17	Lower Aft FM	—	CI 177
	Lower Aft VHF	118-136	CI 122
	Lower Aft FM	403-512	CI 273, CI 272-1, CI 271
		800-870	CI 306
18	NAV	108-118 & 329-335	D20543 (VOR & LOCALIZER)
		108-118 & 329-335	D20543 (VOR & LOCALIZER W/DIPLEXER)
19	Cowling GPS*	—	GA 35

*Earlier aircraft.

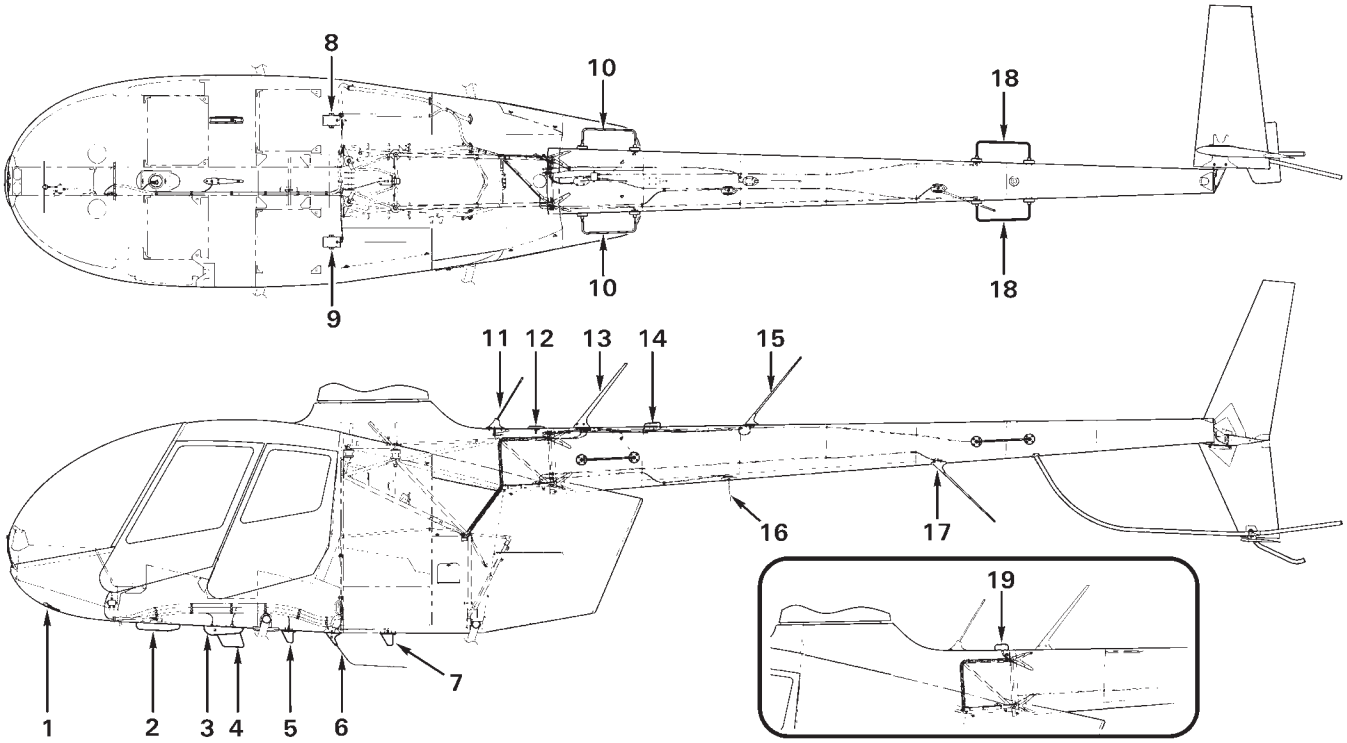

F850 REV I

FIGURE 6-10 ANTENNA LOCATIONS

Intentionally Blank

CHAPTER 7

JACKING AND HOISTING

Section	*Title*	*Page*
7-10	Jacking	7.1
7-20	Hoisting	7.5

Intentionally Blank

CHAPTER 7

JACKING AND HOISTING

7-10 Jacking

CAUTION

When jacking helicopter, use mechanical or locking hydraulic jacks, when available. Unlocked hydraulic jacks are subject to pressure-loss which can affect critical measurements during leveling or cause a raised helicopter to become unstable.

CAUTION

Never jack helicopter in windy conditions.

CAUTION

Perform jacking on a clean, flat, hard surface free of water, oil, solvent, grease, or residue that could cause equipment or personnel to slip during jacking procedure.

CAUTION

Do not actuate jacks from underneath helicopter. Remain clear of landing gear skid tubes when helicopter is raised.

A. Jacking

1. Refer to Figure 7-1. Place one (appropriate capacity) jack under each (landing gear) aft strut assembly jack lug/tab and under the ground handling ball. Install jacking point adapters as required.

CAUTION

Ground handling ball must slide unrestricted across a flat surface during jacking. When weighing, verify ball is not under side load which could produce an erroneous weight indication.

2. Position jack levers for convenient access and engage jacks at lugs/tabs and ball. Sandbag jacks for increased stability, as required.

3. Actuate jacks slowly and simultaneously (one person per jack recommended), maintaining helicopter stability. Raise helicopter to required height.

CAUTION

Minimize personnel movement around raised helicopter.

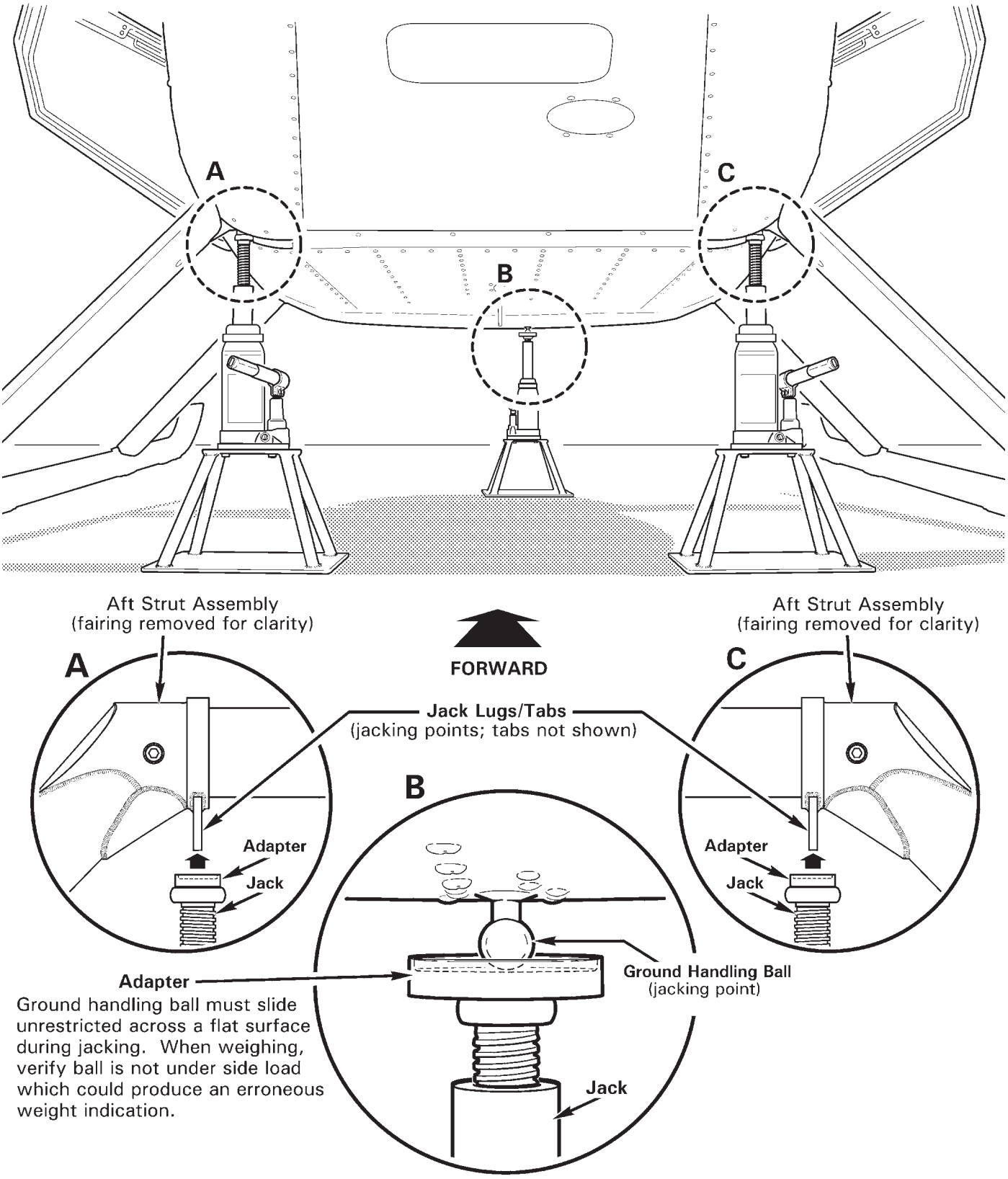

FIGURE 7-1 JACKING

7-10 Jacking (continued)

B. Lowering

CAUTION

Skids spread as aircraft weight settles on landing gear.

1. Refer to Figure 7-1. Slowly and simultaneously (one person per jack recommended) lower each jack ram, maintaining helicopter stability. Lower aircraft to ground.

2. Clear jacks from lugs/tabs and ball, and clear equipment from area.

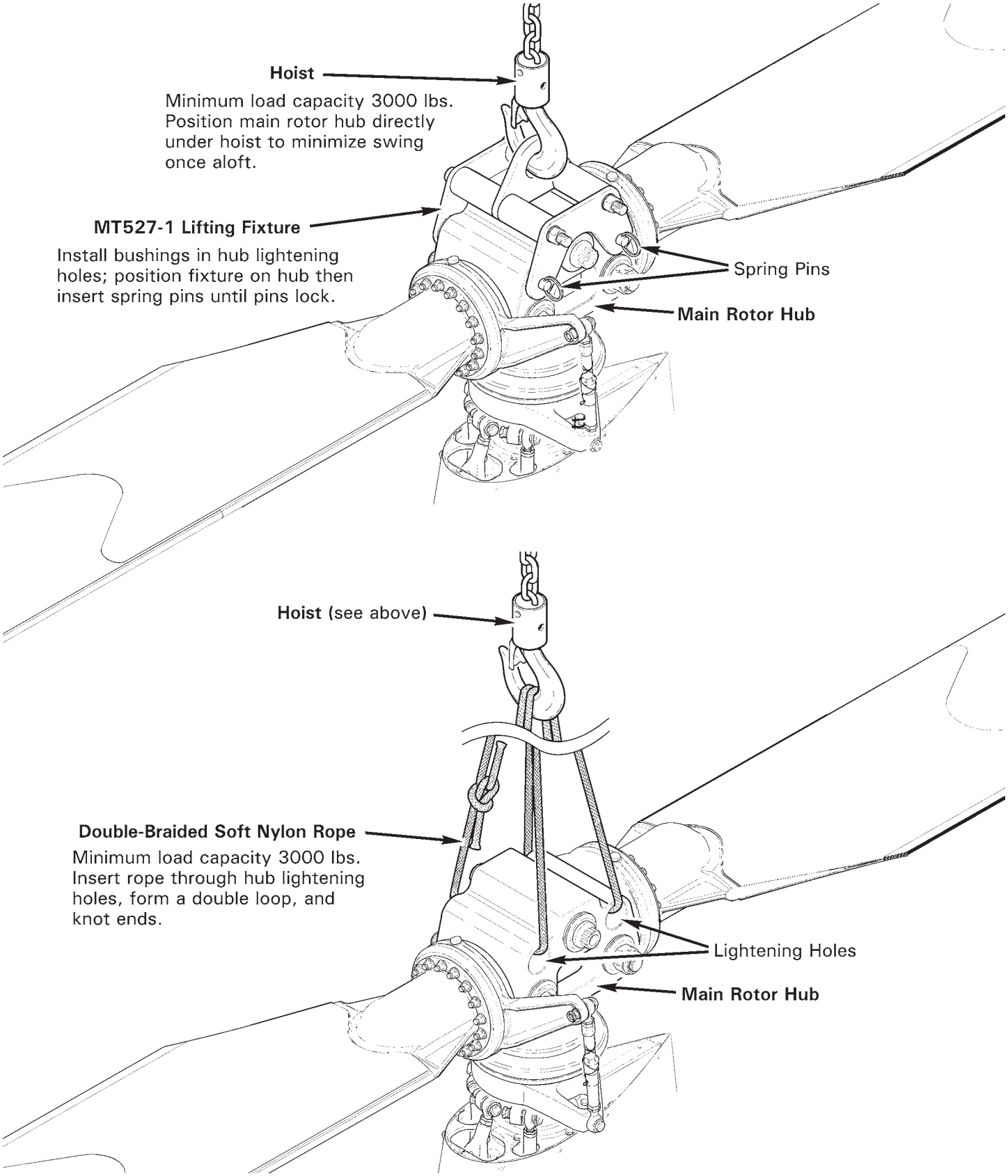

FIGURE 7-2 HOISTING

7-20 Hoisting

CAUTION

Avoid hoisting helicopter in windy conditions.

CAUTION

Verify ground is free of water, oil, solvent, grease, or residue that could cause equipment or personnel to slip during hoisting procedure.

CAUTION

Remain clear of area beneath helicopter when helicopter is raised. Minimize personnel movement around raised helicopter.

A. Hoisting with Lifting Fixture

1. Refer to Figure 7-2. Verify hoisting equipment has minimum load capacity of 3000 lbs.
2. Position main rotor hub directly under hoist to minimize helicopter swing once aloft.
3. Remove two spring pins and four nylon bushings from MT527-1 lifting fixture and install bushings in main rotor hub lightening holes. Position lifting fixture on hub then insert spring pins through fixture and bushings until pins lock. Verify security.
4. Connect hoist to lifting fixture. Verify security.
5. Stabilize helicopter as required by guiding tail skid, but do not exert force (tail skid is secondary structure). Raise helicopter to required height.

B. Hoisting with Nylon Rope

1. Refer to Figure 7-2. Verify hoisting equipment has minimum load capacity of 3000 lbs. Verify minimum work load limit for 1-inch diameter twisted or double braided (preferred) soft nylon rope is 3000 lbs.
2. Position main rotor hub directly under hoist to minimize helicopter swing once aloft.
3. Insert rope through main rotor hub lightening holes, form a double loop, and knot ends. Connect hoist to nylon rope. Verify security.
4. Stabilize helicopter as required by guiding tail skid, but do not exert force (tail skid is secondary structure). Raise helicopter to required height.

7-20 Hoisting (continued)

C. Lowering

CAUTION

Skids spread as aircraft weight settles on landing gear.

1. Refer to Figure 7-2. Stabilize helicopter as required by guiding tail skid, but do not exert force (tail skid is secondary structure). Slowly lower aircraft to ground.

2. Disconnect hoisting equipment, remove lifting fixture or nylon rope from main rotor hub, and clear equipment from area.

CHAPTER 8

WEIGHT AND BALANCE

Section	Title	Page
8-10	Leveling	8.1
8-11	Leveling for Weight and Balance	8.1
8-12	Leveling for Rigging	8.3
8-20	Weighing	8.5
8-21	Preparing Helicopter for Weighing	8.5
8-22	Weighing Procedure and Calculations	8.7
8-30	Fixed Ballast	8.11
8-31	Nose Ballast	8.11
8-32	Empennage Ballast	8.13

Intentionally Blank

CHAPTER 8

WEIGHT AND BALANCE

8-10 Leveling

NOTE

Perform leveling and weighing in a zero-wind environment.

NOTE

Verify spirit level is calibrated by placing level on a designated surface and noting bubble position. Rotate spirit level 180°; verify bubble is in the same position.

8-11 Leveling for Weight and Balance

NOTE

Main rotor blade position does not affect weight and balance calculations.

1. Jack helicopter per Section 7-10.
2. Refer to Figure 8-1. Place a spirit level laterally on F463-1 aft tunnel cover. Verify cover is flat; if cover is not flat, remove cover and place spirit level across keel panel flanges.
3. Adjust jacks at (landing gear) aft strut assembly jack lugs/tabs until helicopter is level laterally.
4. Position spirit level longitudinally on aft tunnel cover, or atop left or right keel panel if cover is removed. Adjust jack under ground handling ball until helicopter is level longitudinally.

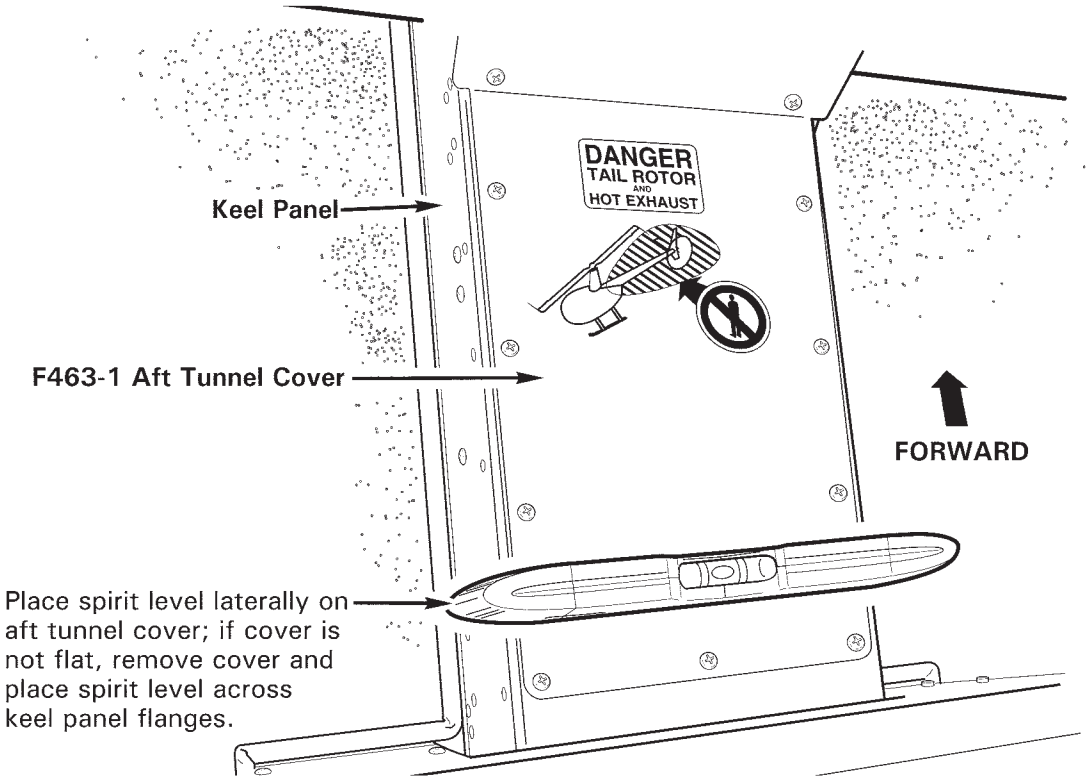

FIGURE 8-1 LEVELING FOR WEIGHT AND BALANCE
(Lateral shown; view looking down between aft seat footwells)

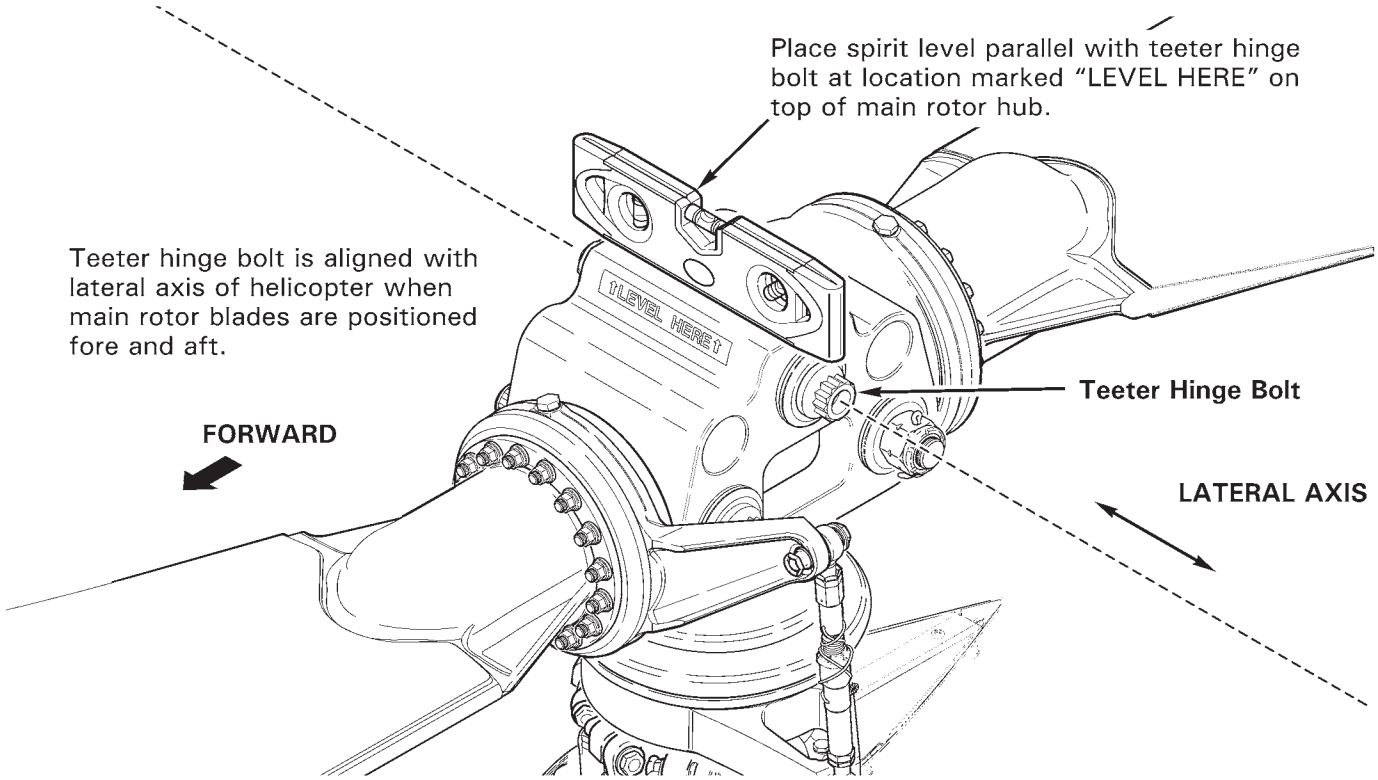

FIGURE 8-2 LEVELING FOR RIGGING
(Lateral shown)

8-12 Leveling for Rigging

1. Refer to Figure 8-2. Place cyclic stick in vertical position and apply cyclic friction. Position main rotor blades approximately fore and aft and apply rotor brake. (Teeter hinge bolt is aligned with lateral axis of helicopter.)

2. Jack helicopter per Section 7-10.

3. Place a spirit level parallel with teeter hinge bolt at location marked "LEVEL HERE" on top of main rotor hub.

4. Adjust jack at (landing gear) aft strut assembly jack lugs/tabs until helicopter is level laterally.

5. Release rotor brake and rotate main rotor until teeter hinge bolt is aligned with longitudinal axis of the helicopter. Apply rotor brake. Verify cyclic stick is in vertical position with friction applied.

6. Adjust jack under ground handling ball until helicopter is level longitudinally. Remove spirit level.

Intentionally Blank

8-20 Weighing

Reweigh helicopter when helicopter empty weight and empty weight center of gravity have been modified and if the accuracy of additional calculations is suspect.

Maintain a continuous record of the helicopter's weight and balance using the Weight and Balance Record in R66 Pilot's Operating Handbook (POH) Section 6.

> NOTE
>
> Verify scales are calibrated. Operate scales according to scale manufacturer's instructions.

> NOTE
>
> Never weigh the helicopter in the wind. Weigh helicopter on a flat, hard surface in a zero-wind environment for accurate scale readings.

8-21 Preparing Helicopter for Weighing

1. Defuel helicopter per Section 12-42.
2. Service engine oil, hydraulic fluid, and main & tail rotor gearboxes per Chapter 12.
3. Clean aircraft per Section 20-10. Ensure helicopter is completely dry prior to weighing.
4. Remove foreign objects from baggage compartments and stowage areas.
5. Verify cowlings, removable panels, cabin doors, removable controls, and R66 Pilot's Operating Handbook (POH) are installed.
6. Verify Equipment List/Weight and Balance Data sheet (RF 134) and modifications recorded in the Weight and Balance Record correspond with installed equipment and recorded equipment locations.

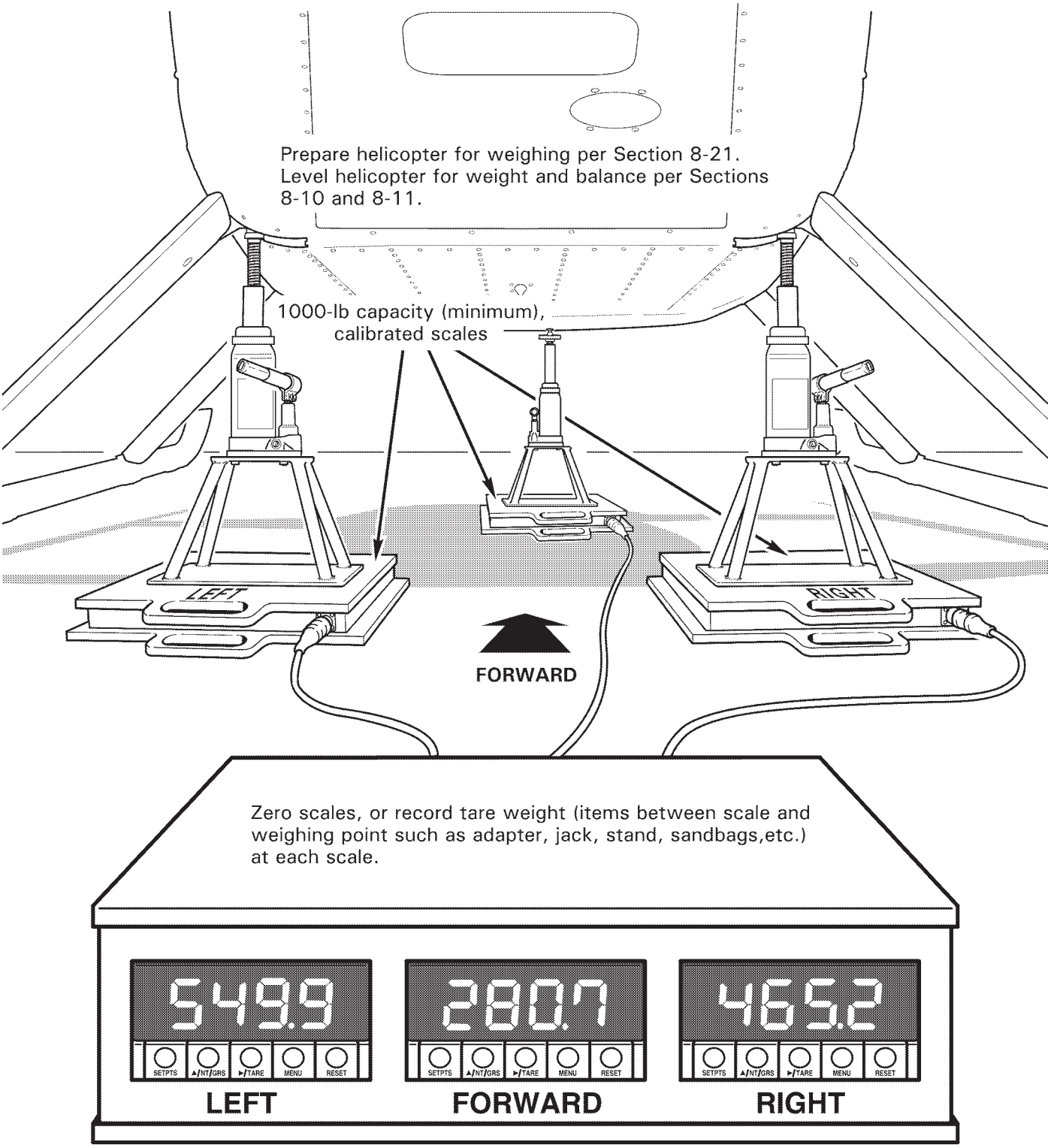

FIGURE 8-3 WEIGHING
(Scale indications for demonstration only)

8-22 Weighing Procedure and Calculations

NOTE

- Arm is the distance in inches from datum.
- Datum is located 100 inches forward of main rotor centerline.
- CG (arm) is determined by dividing total moment by total weight.

1. Refer to Section 8-20. Prepare helicopter for weighing per Section 8-21.
2. Refer to Figure 8-3. Place a jack and one 1000-lb capacity (minimum) scale under each (landing gear) aft strut assembly jack lug/tab and under the ground handling ball.
3. Zero scales, or record tare weight (items between scale and weighing point such as adapter, jack, stand, sandbags, etc.) at each scale.
4. Level helicopter for weight and balance per Sections 8-10 and 8-11. Remove spirit level. If removed, carefully replace F463-1 aft tunnel cover, unsecured, on top of keel panels.
5. Calculate net weights:

Weighing Point	Scale Indication		Tare Weight		Net Weight	
Forward:	_____	–	_____	=	_____	lb
Left:	_____	–	_____	=	_____	lb
Right:	_____	–	_____	=	_____	lb

8-22 Weighing Procedure and Calculations (continued)

6. Calculate weight and CG per the following table. Adjust ballast per steps 6b thru 6e as required until calculated CG is between 101.50 and 102.50 per step 6a.

Item	Weight (lb)		Longitudinal CG (arm, inches)		Moment (in.-lb)
Forward Net:	_____	x	32.67	=	_____
Left Net:	_____	x	127.35	=	_____
Right Net:	_____	x	127.35	=	_____
Pilot (right forward seat; add):	160.00	x	49.00	=	7840.00
Unusable fuel (add):	6.70	x	110.40	=	739.68
Calculated weight and CG:	_____		_____		_____

a. If Calculated CG is between 101.50 and 102.50, (additional) ballast is not required. Proceed to step 7.

b. If Calculated CG is less than 101.50 and nose ballast is not installed, install empennage ballast per Section 8-32. Reweigh helicopter and calculate new weight and CG per the previous steps.

c. If Calculated CG is less than 101.50 and nose ballast is installed, determine (minimum) nose ballast to remove:

$$\frac{(102.50 - \text{Calculated CG}) \times \text{Calculated weight}}{97.35} = _____ \text{ lb}$$

Round down to nearest 0.25 lb. Remove nose ballast per Section 8-31. Reweigh helicopter and calculate new weight and CG per the previous steps.

d. If Calculated CG is greater than 102.50 and empennage ballast is installed, remove empennage ballast per Section 8-32. Reweigh helicopter and calculate new weight and CG per the previous steps.

e. If Calculated CG is greater than 102.50 and empennage ballast is not installed, determine (minimum) additional nose ballast required:

$$\frac{(\text{Calculated CG} - 102.50) \times \text{Calculated weight}}{97.35} = _____ \text{ lb}$$

Round up to nearest 0.25 lb. Install nose ballast per Section 8-31. Reweigh helicopter and calculate new weight and CG per the previous steps.

7. Lower helicopter per Section 7-10. Secure aft tunnel cover.

8-22 Weighing Procedure and Calculations (continued)

8. Calculate basic empty weight and longitudinal CG:

Item	Weight (lb)		Longitudinal CG (arm, inches)		Moment (in.-lb)
Forward Net:	_____	x	32.67	=	_____
Left Net:	_____	x	127.35	=	_____
Right Net:	_____	x	127.35	=	_____
Unusable fuel (add):	6.70	x	110.40	=	739.68
Basic empty weight and longitudinal CG:	_____		_____		_____

9. Calculate basic empty weight and lateral CG:

Item	Weight (lb)		Lateral CG (arm, inches)		Moment (in.-lb)
Forward Net:	_____	x	4.13	=	_____
Left Net:	_____	x	– 16.73	=	_____
Right Net:	_____	x	16.73	=	_____
Unusable fuel (add):	6.70	x	– 20.70	=	– 138.69
Basic empty weight and lateral CG:	_____		_____		_____

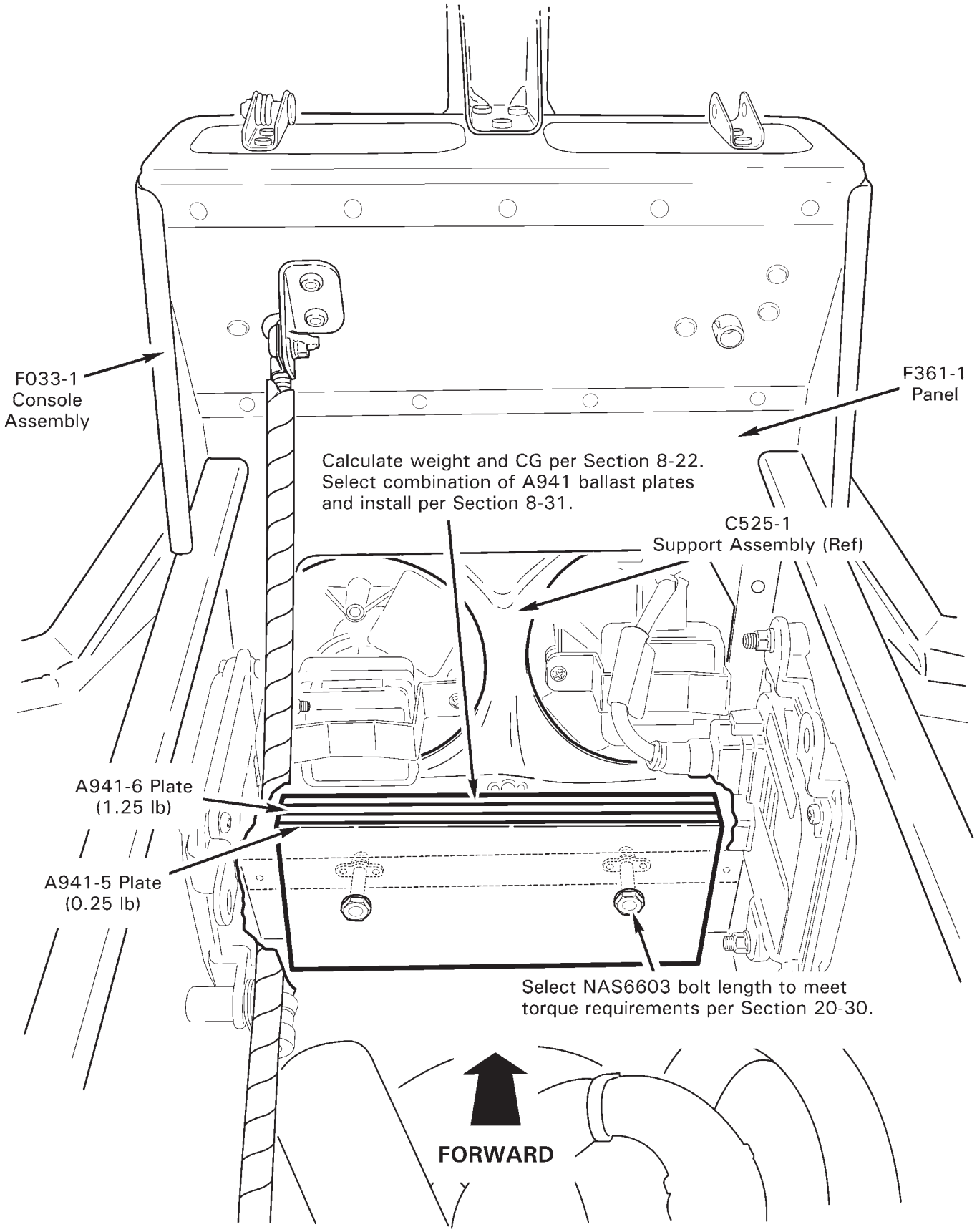

FIGURE 8-4 NOSE BALLAST
(View inside lower console assembly with upper console hinged aft)

8-30 Fixed Ballast

8-31 Nose Ballast

Refer to R66 Illustrated Parts Catalog (IPC) Figure 8-1.

> NOTE
>
> Maximum allowable nose ballast is 15.00 lb.

> **CAUTION**
>
> Altering fixed ballast can appreciably affect helicopter center of gravity (CG). If fixed ballast information is unknown, reweigh helicopter per Section 8-22.

1. Refer to Figure 8-4. Remove screws securing B050-22 or -23 upper console assembly to F033-1 lower console assembly and hinge upper console assembly aft. Protect instrument face with foam support or equivalent.

2. Remove hardware securing A941-5 or -6 ballast plate(s), if installed, to F361-1 panel.

3. Remove or install ballast plates per calculations performed in Section 8-22. Select NAS6603 bolt length to meet torque requirements per Section 20-30. Install hardware, torque bolts per Section 20-32, and torque stripe per Figure 5-1.

4. Hinge upper console assembly forward and install screws securing upper and lower console assemblies. Verify security.

5. Reweigh and/or calculate basic empty weight and CG per Section 8-22.

6. Revise Weight and Balance Record in R66 Pilot's Operating Handbook (POH) Section 6 to reflect ballast removal or installation using the following data:

	Weight	Longitudinal Arm	Longitudinal Moment	Lateral Arm	Lateral Moment
Nose ballast	0-15.00 lb	5.15 in.	Variable	0.00 in.	0.00 in.-lb

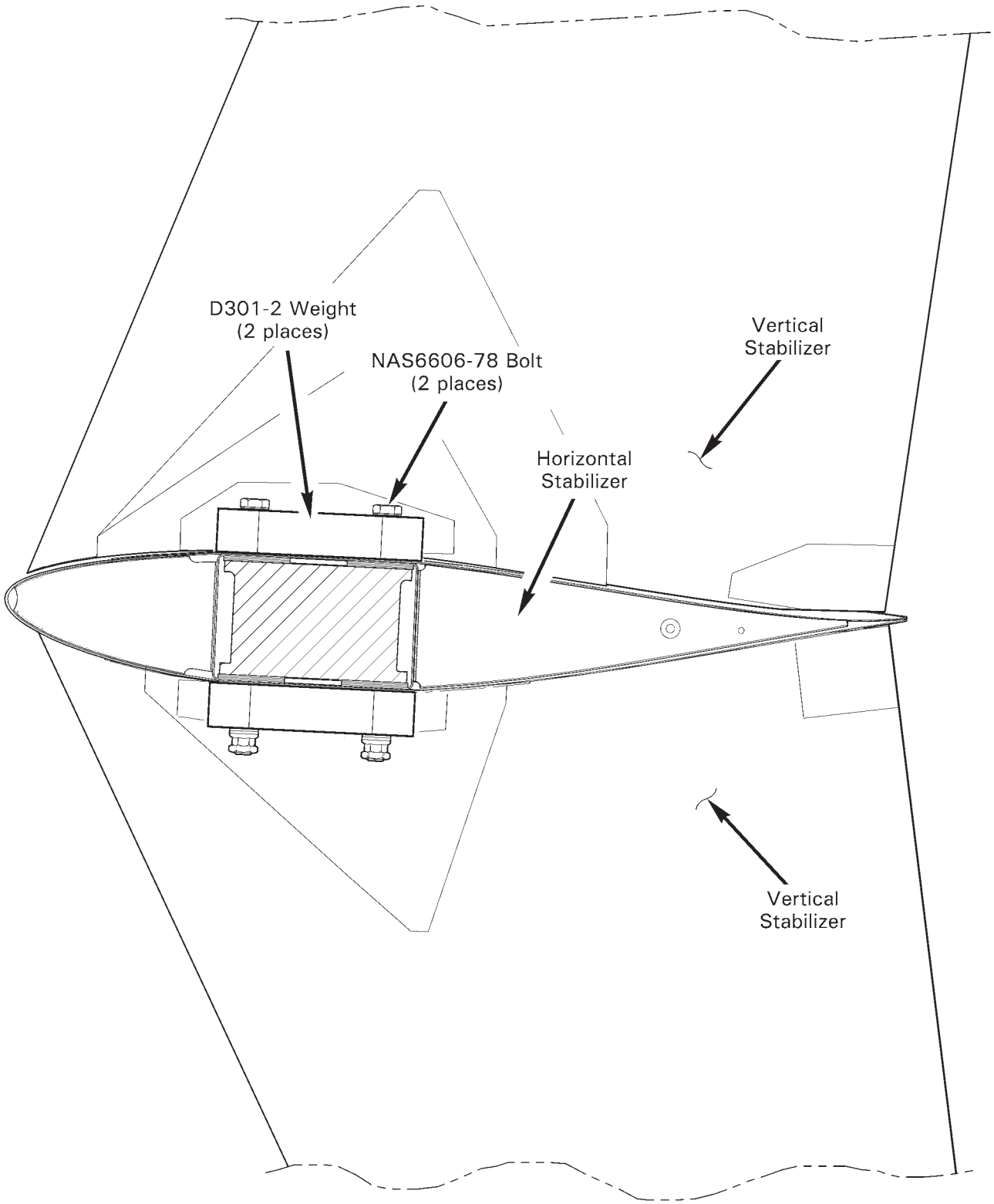

FIGURE 8-5 EMPENNAGE BALLAST

8-32 Empennage Ballast

Refer to R66 Illustrated Parts Catalog (IPC) Figure 8-1.

NOTE

Use only approved materials listed in Section 20-70.

CAUTION

Altering fixed ballast can appreciably affect helicopter center of gravity (CG). If fixed ballast information is unknown, reweigh helicopter per Section 8-22.

WARNING

Maximum allowable empennage ballast is 3.00 lb. If empennage ballast is required per Section 8-22, two D301-2 weights must be installed as shown in Figure 8-5.

A. Removal

1. Refer to Figure 8-5. Remove empennage assembly, including D301-2 ballast weights, per Section 53-50.
2. Solvent-clean bare metal around and between bolt holes on horizontal stabilizer upper and lower surfaces.
3. Apply light coat zinc-chromate or epoxy primer to bare metal surfaces. While primer is wet, install empennage assembly per Section 53-50. Topcoat hardware with colored paint as desired.
4. Reweigh and/or calculate basic empty weight and CG per Section 8-22.
5. Revise Weight and Balance Record in R66 Pilot's Operating Handbook (POH) Section 6 to reflect ballast removal using the following data:

	Weight	Longitudinal Arm	Longitudinal Moment	Lateral Arm	Lateral Moment
Empennage ballast	3.00 lb	325.44 in.	976.32 in.-lb	4.45 in.	13.35 in.-lb

B. Installation

1. Refer to Figure 8-5. Remove empennage assembly per Section 53-50.
2. Solvent-clean bare metal around and between bolt holes on horizontal stabilizer upper and lower surfaces.
3. Temporarily install D301-2 weights per R66 IPC Figure 8-1. Torque bolts per Section 20-32.
4. Trace outline of weights onto horizontal stabilizer upper and lower surfaces using felt-tip, non-permanent marker or tape. Remove weights.

8-32 Empennage Ballast (continued)

B. Installation (continued)

5. Remove paint within traced outlines on stabilizer by block sanding (to maintain flatness). Finish sanding using 320-grit or finer wet-or-dry sandpaper, or using approved stripper per Section 20-71. Similarly, on each D301-2 weight, remove paint from one flat surface which will clamp against stabilizer.

6. Remove tracing media. Solvent-clean bare metal on horizontal stabilizer and weight clamping surfaces.

7. Reweigh and/or calculate basic empty weight and CG per Section 8-22.

8. Revise Weight and Balance Record in R66 Pilot's Operating Handbook (POH) Section 6 to reflect ballast installation using the following data:

	Weight	Longitudinal Arm	Longitudinal Moment	Lateral Arm	Lateral Moment
Empennage ballast	3.00 lb	325.44 in.	976.32 in.-lb	4.45 in.	13.35 in.-lb

CHAPTER 9

GROUND HANDLING

Section	Title	Page
9-10	Ground Handling	9.1
9-11	Ground Handling Wheels	9.1
9-12	Moving Helicopter on Ground Handling Wheels	9.3
9-13	Ground Handling Carts	9.3
9-14	Ground Power Start	9.3
9-20	Trailering	9.4

Intentionally Blank

CHAPTER 9

GROUND HANDLING

9-10 Ground Handling

9-11 Ground Handling Wheels

Refer to R66 Illustrated Parts Catalog (IPC) Figure 9-1.

NOTE

R66 ground handling wheels are installed inboard of landing gear skid tubes. C063-5 (LH) and C063-6 (RH) ground handling wheel assemblies are not interchangeable. When wheels are installed and in locked position, both handles point aft.

CAUTION

Handle has a tendency to snap over when raising and lowering the helicopter. Grip handle firmly with both hands during operation.

CAUTION

Remain clear of landing gear skid tubes when helicopter is raised.

WARNING

Remove ground handling wheels for flight.

A. Installation

NOTE

Verify proper inflation of ground handling wheel tires. Maximum tire inflation pressure is 70 psi.

1. Extend ground handling wheel retractable handle by depressing locking pins and sliding handle out until pins engage outer holes. Verify security.

2. Refer to Figure 9-1. Hold ground handling wheel assembly inboard of skid with handle forward, wheel aft, and spindle pointed outboard. Insert spindle completely into skid-mounted support, then pull handle in rearward arc (raises helicopter) until handle is in locked position, parallel with the skid.

3. Repeat steps to install second wheel assembly. Helicopter will rest on skid toes.

1. Insert spindle into skid-mounted support.

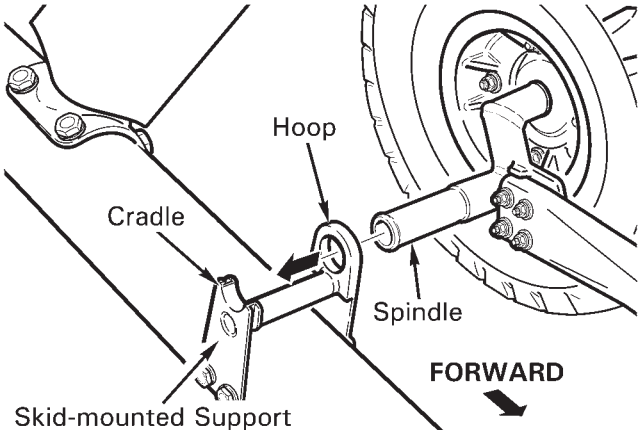

2. Verify flange is outboard of cradle.

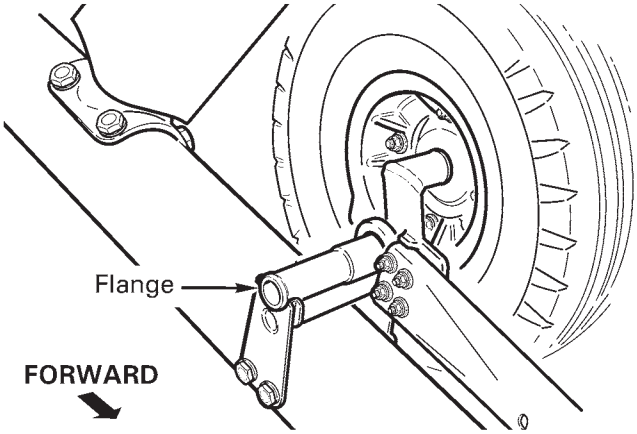

3. Pull handle in rearward arc to raise helicopter.

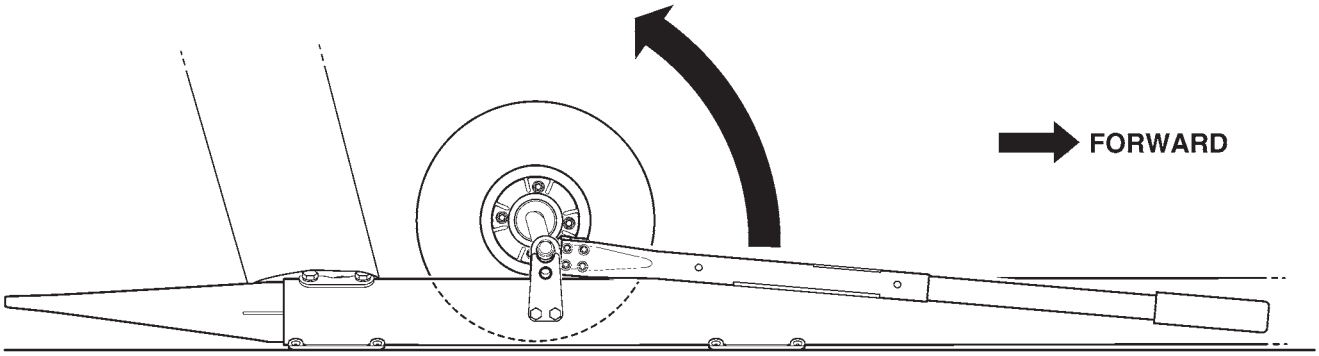

4. Handle is in locked position when parallel with the skid.

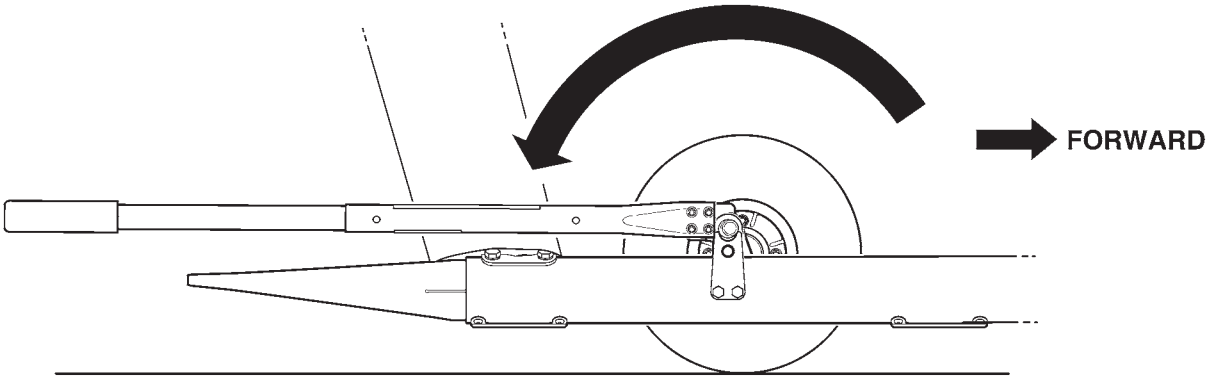

NOTE

R66 ground handling wheels are installed inboard of landing gear skid tubes. C063-5 (LH) and C063-6 (RH) ground handling wheel assemblies are not interchangeable. When wheels are installed and in locked position, both handles point aft.

FIGURE 9-1 GROUND HANDLING WHEELS

9-11 Ground Handling Wheels (continued)

B. Removal

1. Refer to Figure 9-1. Pull ground handling wheel handle in forward arc (lowers helicopter) until handle is in unlocked position, parallel with the skid. Remove spindle from skid-mounted support and remove wheel assembly. Repeat step to remove second wheel assembly.

2. Retract handle by depressing locking pins and sliding handle in until pins engage inner holes. Verify security.

9-12 Moving Helicopter on Ground Handling Wheels

1. Position main rotor blades approximately fore and aft and apply rotor brake.

2. Install ground handling wheels per Section 9-11.

3. Verify ground handling area is free of foreign object debris.

4. Have one person pull down on tail rotor gearbox until skid tubes are parallel with the ground. During ground handling, balance helicopter to minimize wear on forward skid shoes and rear extensions.

NOTE

Steer helicopter by gripping the tail rotor gearbox, aft tailcone section, or inboard part of horizontal stabilizer between tailcone and vertical stabilizers.

CAUTION

Do not steer helicopter by gripping the tail rotor guard, vertical stabilizers, outboard part of horizontal stabilizer, tail rotor, tail rotor controls, or tail skid.

5. a. If moving helicopter forward, nose first: Open engine cowling door(s). Have one person (or two people) push on the engine door frame(s) forward ledge.

   b. If moving helicopter backward, tail first: Have one person (or two people) push on either side of nose vent.

9-13 Ground Handling Carts

The R66 can be handled by one person using the MT950-1 Universal ground handling cart.

Product specifications, as well as MT950 Operating Instructions, Maintenance Manuals, and Illustrated Parts Catalogs are available on our website, www.robinsonheli.com, under the Customer Support tab.

9-14 Ground Power Start

See R66 Pilot's Operating Handbook (POH) Section 4.

9-20 Trailering

CAUTION

Trailering the R66 is not normally recommended. Most trailers large enough to accommodate the helicopter are designed for much heavier loads; the trailer's springs and shock absorbers will not function properly when lightly-loaded. Also, without support, the tailcone can resonate with trailer vibrations, subjecting the tailcone to greatly amplified loads.

If trailering is unavoidable, observe the following precautions:

1. Load trailer with ballast to an average weight the trailer is designed to carry.
2. Support the tailcone. Cushion support point(s) to prevent tailcone damage.
3. Perform one of the following options:
   a. Remove main rotor blades per Section 62-10. Pack blades in shipping crate. See R66 Illustrated Parts Catalog [IPC] Figure 99-11.
   b. Install main rotor blade supports per Section 10-13.
   c. Fabricate blade supports to unload droop stops. Position supports inboard of blade extended tab. Cushion support points to prevent blade damage.
4. Restrain tail rotor to prevent teetering.
5. Fuel helicopter per Section 12-41.
6. Protect windshield, windows, rotor systems, and all fragile equipment from exposure to highway debris and subsequent damage.
7. After trailering, perform 100-hour maintenance and inspection per Section 5-45.

CHAPTER 10

PARKING AND STORAGE

Section	Title	Page
10-10	Parking	10.1
10-11	Parking in High Wind or Turbulent Air	10.1
10-12	Main Rotor Blade Tie-Downs	10.3
10-13	Main Rotor Blade Supports	10.5
10-20	Storage (Greater than 30 days)	10.6

Intentionally Blank

CHAPTER 10

PARKING AND STORAGE

10-10 Parking

1. Place cyclic stick in vertical position and apply cyclic friction.

2. Place collective stick full down and apply collective friction.

> **CAUTION**
>
> Never pull down on main rotor blade. To teeter blades, push up on the opposite blade.

3. Open three left-side fuselage access doors, observe placards, and climb steps to access main rotor. Teeter blades by pushing up on one blade until opposite blade contacts teeter stop. Rotate low blade forward. Position rotor blades approximately fore and aft and apply rotor brake.

4. Install main rotor blade tie-down(s) per Section 10-12. Install engine exhaust cover.

5. Close and latch all access doors. Close and latch baggage compartment door.

6. Verify BATTERY switch is OFF, buckle seat harnesses, and close and latch cabin doors (if installed).

10-11 Parking in High Wind or Turbulent Air

A. High Wind or Turbulent Air

Helicopter should be hangared or moved to a safe area during storm conditions or when storm conditions are forecasted. When parking helicopter in high winds or when aircraft is exposed to prop/rotor wash or jet blast:

1. Position helicopter with nose pointed in the direction of prevailing wind or turbulent air.

2. Park helicopter per Section 10-10. Position rotor blades slightly offset from fore and aft to prevent aft blade from flapping into tailcone, and apply rotor brake.

B. Extreme Conditions

In extreme conditions, at the operator's discretion:

1. Remove main rotor blades per Section 62-10. Remove tail rotor assembly per Section 64-10. Store main rotor blades and tail rotor assembly in hangar or safe area.

2. Remove main rotor pitch links per steps below, or temporarily secure links together using ty-rap(s) or safety wire:

   a. Mark an "X" on one pitch link lower rod end and corresponding swashplate ear using a colored grease pencil. Mark an "O" on opposite link and corresponding swashplate ear.

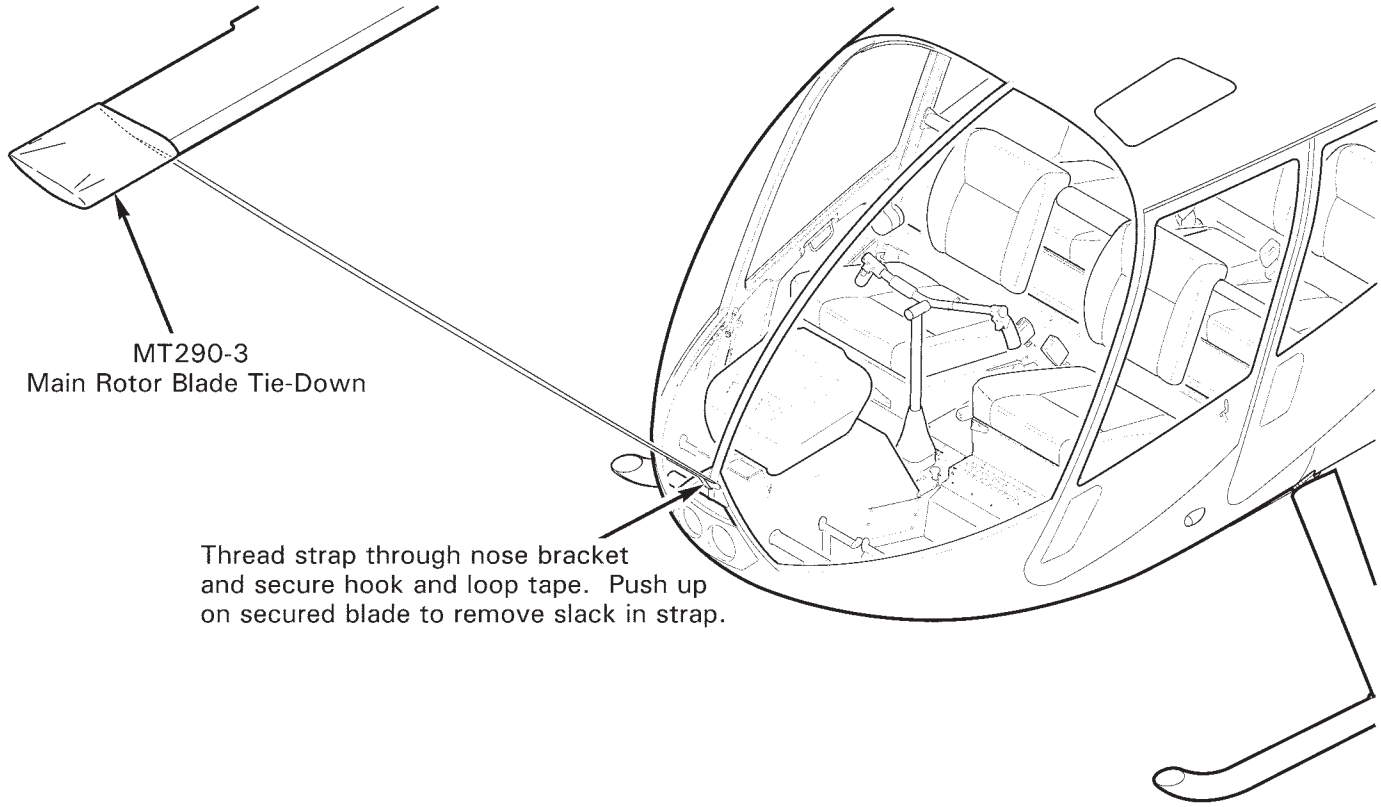

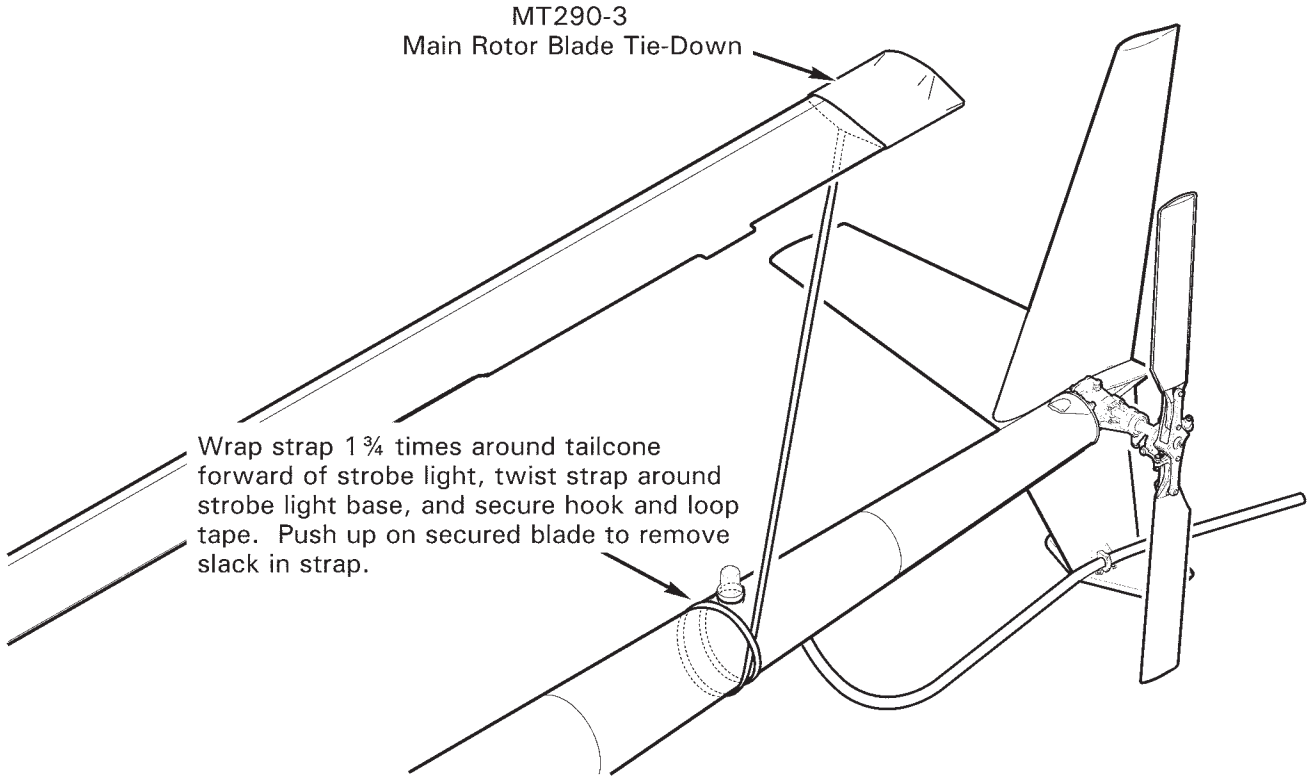

FIGURE 10-1 MAIN ROTOR BLADE TIE-DOWNS

10-11 Parking in High Wind or Turbulent Air (continued)

B. Extreme Conditions (continued)

2. b. Remove hardware securing pitch links to swashplate assembly.

3. Remove tail rotor pitch links per steps below:

   a. Refer to Figure 64-1. Tag each pitch link with corresponding blade serial number. Disconnect pitch links from tail rotor blades; keep associate balancing hardware with each link.

   b. Remove hardware securing pitch links to tail rotor pitch control assembly.

10-12 Main Rotor Blade Tie-Downs

CAUTION

Overtightening tie-down straps can damage main rotor blades. Maximum tie-down tension is 5 lb.

1. Park helicopter and position blades per Section 10-10 or 10-11.

2. Refer to Figure 10-1. Slide MT290-3 tie-down jacket over forward (lowered) main rotor blade tip, with white lettering facing down. Thread strap through nose bracket and secure tie-down hook and loop tape. Push up on secured blade to remove slack in tie-down strap.

3. As required, install MT290-3 tie-down on aft main rotor blade. Slide jacket over blade tip, with white lettering facing down. Wrap strap 1¾ times around tailcone forward of strobe light, twist strap around strobe light base, and secure tie-down hook and loop tape. Push up on secured blade to remove slack in tie-down strap.

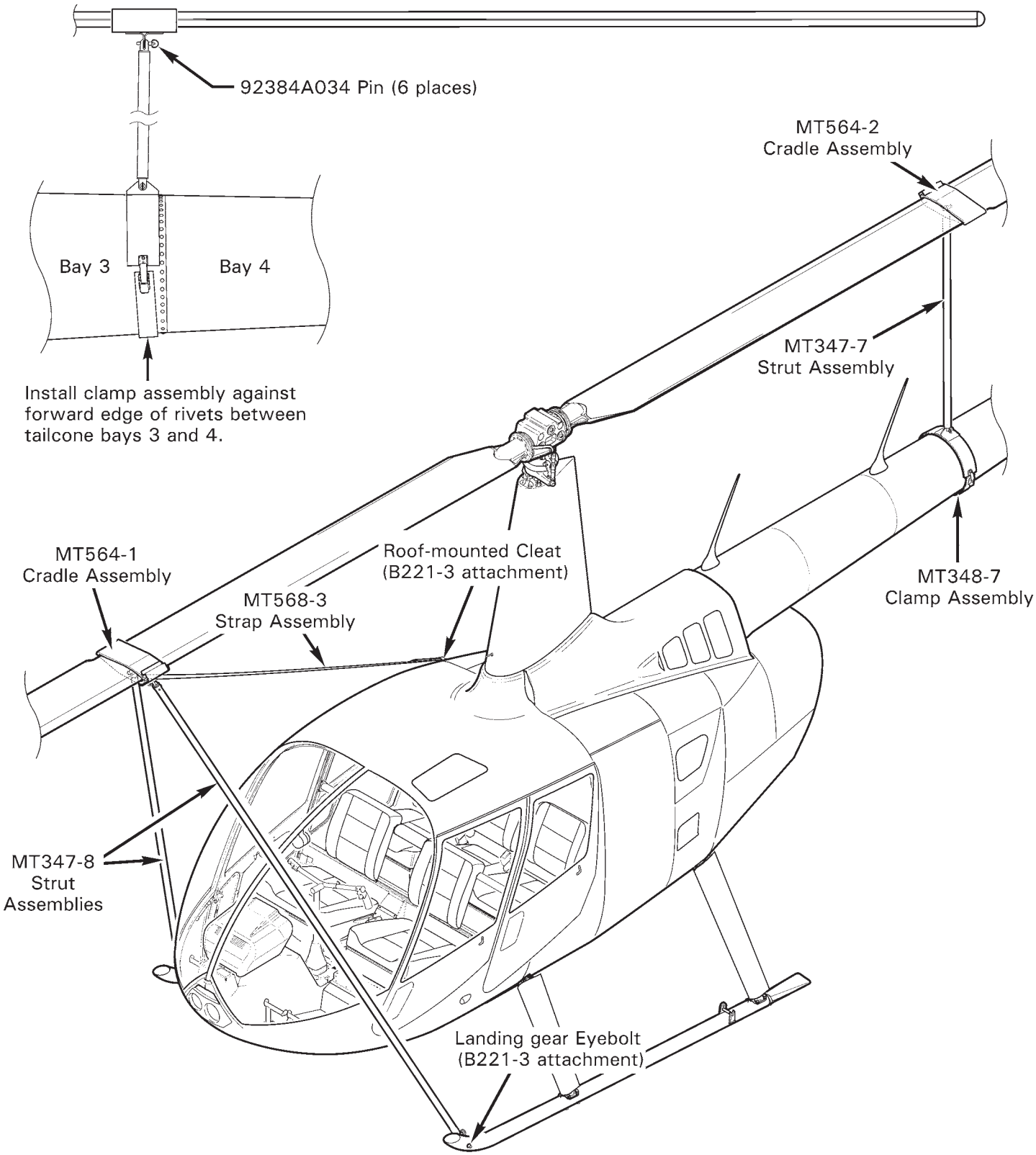

FIGURE 10-2 MAIN ROTOR BLADE SUPPORTS

10-13 Main Rotor Blade Supports

Refer to R66 Illustrated Parts Catalog (IPC) Figure 10-7.

CAUTION

Do not allow strut assemblies to hang from cradle assemblies installed on main rotor blades. Support strut assemblies during strut removal or installation.

A. Removal

1. Refer to Figure 10-2. Remove 92384A034 retaining pins securing MT347-7 strut assembly to MT564-2 cradle assembly and MT348-7 clamp assembly; remove strut assembly. Remove cradle and clamp assemblies.

2. Remove retaining pin securing one MT347-8 strut assembly to landing gear eyebolt, then remove pin securing same strut to MT564-1 cradle assembly. Repeat step to remove second strut assembly.

3. Detach MT568-3 strap assembly hook and loop tape near roof-mounted cleat and unthread strap from cleat. Remove cradle assembly.

B. Installation

NOTE

B221-3 attachment installation (landing gear eyebolts and roof-mounted cleat) is required for mounting blade supports.

1. Refer to Figure 10-2. Position main rotor blades approximately fore and aft.

2. Install MT564-1 cradle assembly inboard of forward blade extended tab, with MT568-3 strap assembly attached. Thread opposite end of strap assembly through roof-mounted cleat and secure strap hook and loop tape.

3. Secure one MT347-8 strut assembly to cradle assembly, then to landing gear eyebolt, using 92384A034 retaining pins. Repeat step to secure second strut assembly.

4. Install MT564-2 cradle assembly inboard of aft blade extended tab. Install MT348-7 clamp assembly against forward edge of rivets between tailcone bays 3 and 4.

5. Secure MT347-7 strut assembly to cradle and clamp assemblies using retaining pins. Verify strut is approximately vertical.

6. Engage rotor brake. If desired, mark cradle assembly location on blade using felt-tip marker, to facilitate future installation.

10-20 Storage (Greater than 30 days)

NOTE

Helicopter should be hangared or moved to a safe area during storage.

NOTE

Periodically inspect aircraft for corrosion and correct as required. Aircraft stored in humid environments are subject to aggressive corrosive reaction and require more frequent inspection.

1. Record the date helicopter is prepared and placed in storage.
2. Preserve engine for aircraft storage per RR300 Series Operation and Maintenance Manual (OMM).
3. Refinish main rotor blades per Section 62-52. Refinish tail rotor blades per Section 64-36.
4. Open applicable circuit breakers.
5. Remove battery per Chapter 96. Inspect & service battery according to battery manufacturer's instructions.
6. Service engine oil, hydraulic fluid, and main & tail rotor gearboxes per Chapter 12.
7. Fuel helicopter per Section 12-41.

NOTE

Fuel lubricates bladder inner liner and keeps it from drying out or cracking. Refuel helicopter after run-ups during storage per Section 12-41.

8. Clean aircraft per Section 20-10. Ensure helicopter is clean and dry prior to storing. Open door vents and doors to ventilate cabin and baggage compartment as required.
9. Close and latch all access doors. Install engine exhaust cover.

CHAPTER 11

PLACARDS AND MARKINGS

Section	Title	Page
11-10	Placards and Markings	11.1

Intentionally Blank

CHAPTER 11

PLACARDS AND MARKINGS

11-10 Placards and Markings

Refer to R66 Illustrated Parts Catalog Chapter 11 for placard and marking locations.

A. Removal

To remove previously installed decals, start at corners and slowly peel off decal by hand or using a plastic wedge. Avoid damaging or removing paint or primer from surfaces. Remove decal entirely.

B. Installation

Verify surfaces are clean and dry before attaching decals. Use a clean cloth wet with acetone or mild soapy water to clean surfaces, but use caution when using acetone near silk-screened lettering. Acetone can smudge or remove silk-screened letters. Attach decal and rub decal surface with finger, applying slight pressure.

Intentionally Blank

CHAPTER 12

SERVICING

Section	Title	Page
12-10	Main Rotor Gearbox	12.1
12-11	Servicing	12.1
12-12	Filter Replacement	12.3
12-13	Chip Detector and Sight Gage	12.3
12-20	Tail Rotor Gearbox	12.7
12-21	Servicing	12.7
12-22	Chip Detector and Sight Gage	12.8
12-23	Drain and Flush	12.8
12-30	Hydraulic System	12.9
12-31	Servicing	12.9
12-32	Filter Replacement	12.9
12-33	Drain and Flush	12.11
12-34	Bleeding	12.12
12-40	Fuel System	12.13
12-41	Fueling	12.13
12-42	Defueling	12.13
12-50	Main Rotor Blades	12.15
12-51	Pitch Bearing Housing	12.15
12-60	Engine Oil Servicing	12.16
12-70	(Engine) Compressor Rinse and Wash	12.17
12-80	Air Conditioning System	12.18
12-81	Refrigerant Recovery and System Charging	12.18
12-82	Desiccant Replacement	12.19
12-83	Leak Detection	12.19

Intentionally Blank

CHAPTER 12

SERVICING

12-10 Main Rotor Gearbox

WARNING

Refer to appropriate Material Safety Data Sheet (MSDS) and take necessary safety precautions when working in proximity to hazardous materials.

12-11 Servicing

NOTE

Inspect main rotor gearbox and gearbox lubrication system for leaks when "top off" is required.

NOTE

Verify aircraft is on level ground when evaluating gearbox oil level.

A. Draining Fluid

1. Refer to Figure 12-1. Disconnect chip detector wiring, as required. Remove chip detector from housing.

2. Refer to Figure 12-2. Insert MT054-1 drain assembly into chip detector housing. Position drain hose overboard into a suitable drain container. Jam wedge between support panel stiffener and drain assembly fitting to open valve.

B. Adding Fluid

1. Install chip detector per Section 12-13, if removed.

2. Refer to Figure 12-1. Remove gearbox filler-plug. Fill gearbox with A257-22 lubricant to center of sight glass.

3. Rotate rotor system by hand for several revolutions and pull down on tail rotor gearbox several times. Check gearbox oil level and adjust level as required.

4. Install filler-plug and special torque plug per Section 20-33.

5. Run-up helicopter approximately five minutes at 60-70% RPM per R66 Pilot's Operating Handbook (POH) Section 4.

6. Check gearbox oil level, and adjust level per steps 2 thru 6 as required.

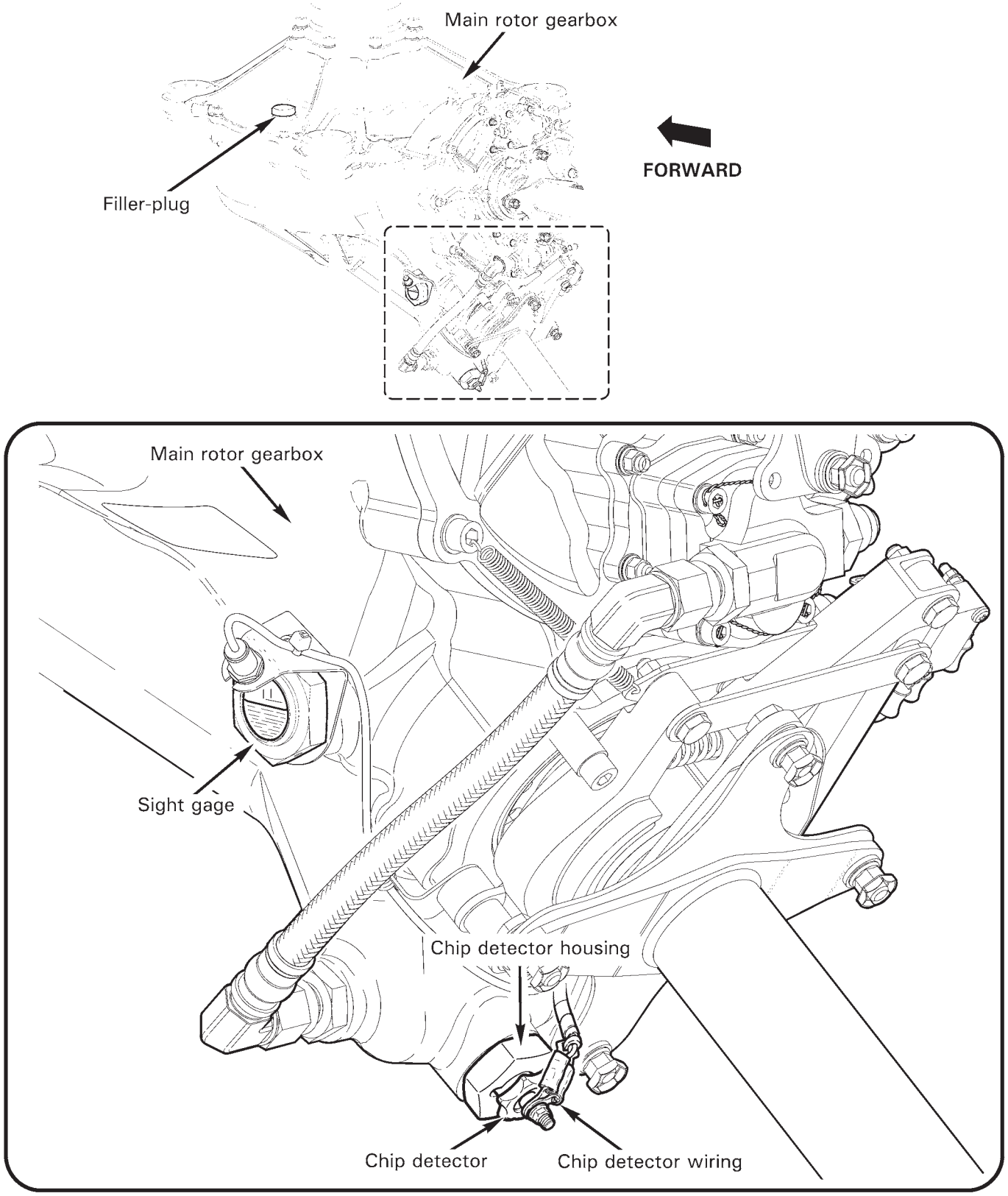

FIGURE 12-1 MAIN ROTOR GEARBOX SERVICING

12-12 Filter Replacement

Refer to R66 Illustrated Parts Catalog (IPC) Figure 63-13.

> NOTE
>
> Replace main rotor gearbox oil every 600 hours. When replacing a filter after new or overhauled main rotor gearbox has accumulated 100 hours, replacing oil is not required.

1. Drain main rotor gearbox oil per Section 12-11, if required.
2. Cut and discard safety wire securing bowl & indicator assembly to head assembly. Unscrew bowl and remove and discard element. Remove o-ring and back-up ring from head assembly.
3. Clean and dry bowl assembly; install new F651-3 seals kit and F651-2 element.
4. Hand-tighten bowl assembly until tight against head assembly. Install 0.032-inch diameter lockwire and safety bowl to head.
5. Service main rotor gearbox per Section 12-11.

12-13 Chip Detector and Sight Gage

A. Removal

1. Refer to Figure 12-1. Disconnect chip detector wiring, as required. Remove chip detector from housing.

> NOTE
>
> Remove chip detector housing and inspect for obvious damage if housing leaks.

2. Drain main rotor gearbox oil per Section 12-11, if removing chip detector housing or sight gage. Remove housing and/or gage as required.

B. Cleaning Chip Detector (and Housing)

1. Scrub chip detector (and housing, if applicable) with a toothbrush and approved solvent per Section 20-70. To remove debris, use compressed air or masking tape; do not use a magnet. Dry chip detector with compressed air or a lint-free cloth.
2. Refer to Figure 12-1. Connect chip detector electrical wiring and special torque terminal nut per Section 20-33. Turn BATTERY switch ON and ground detector's central magnetic probe to airframe. Verify appropriate CHIP warning segment illuminates. Turn BATTERY switch OFF.

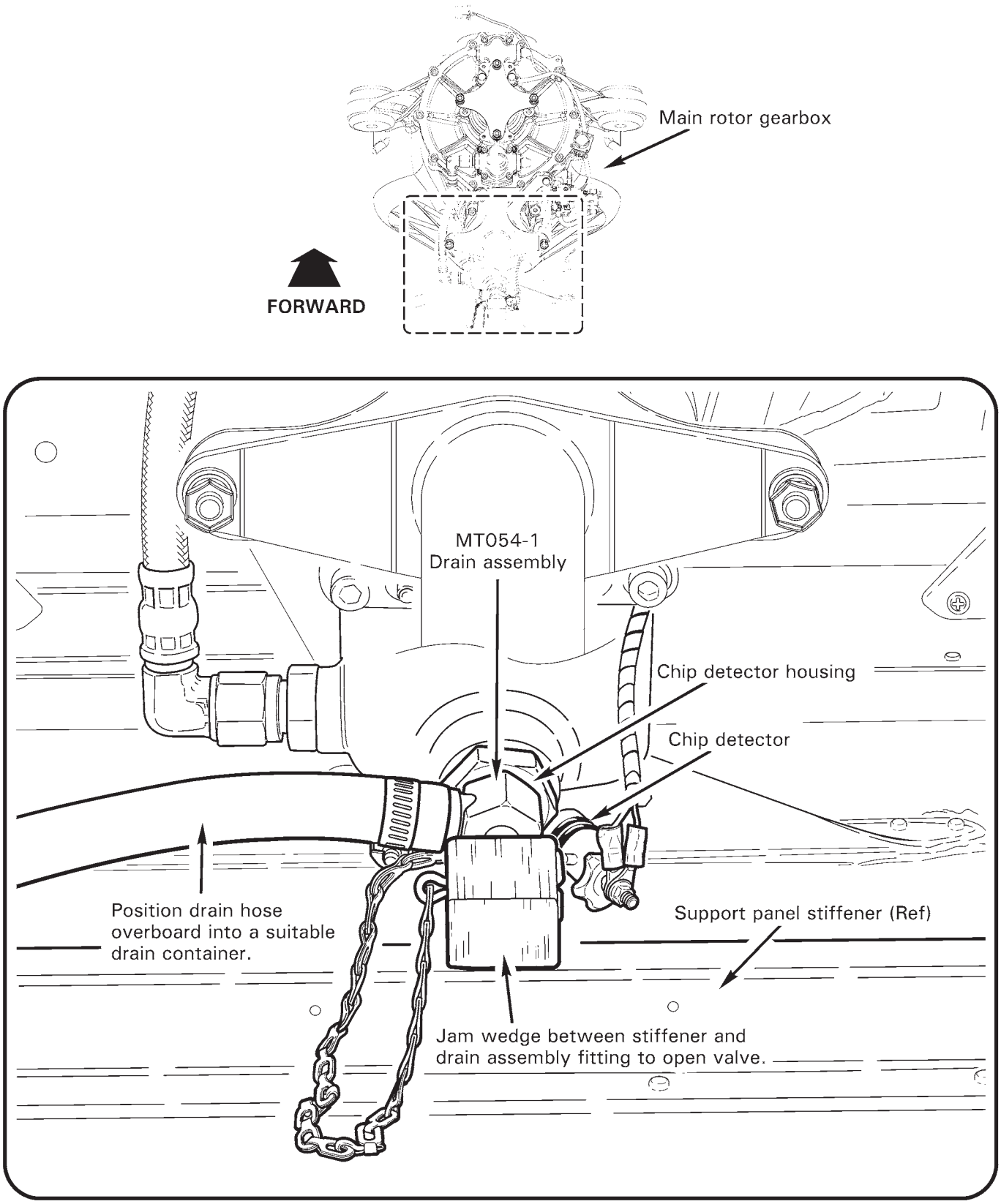

FIGURE 12-2 DRAINING MAIN ROTOR GEARBOX OIL

12-13 Chip Detector and Sight Gage (continued)

C. Installation

1. Refer to Figure 12-1. Verify cleanliness and clarity of sight gage. As required, remove sight gage per Part A and clean with approved solvent per Section 20-70. Install sight gage and special torque per Section 20-33.

2. Verify cleanliness of chip detector and housing. As required, remove and clean chip detector and housing per Parts A and B. Install housing and special torque per Section 20-33. Install chip detector.

3. Turn BATTERY switch ON. Verify MR CHIP warning segment illuminates when test button is depressed. Turn BATTERY switch OFF.

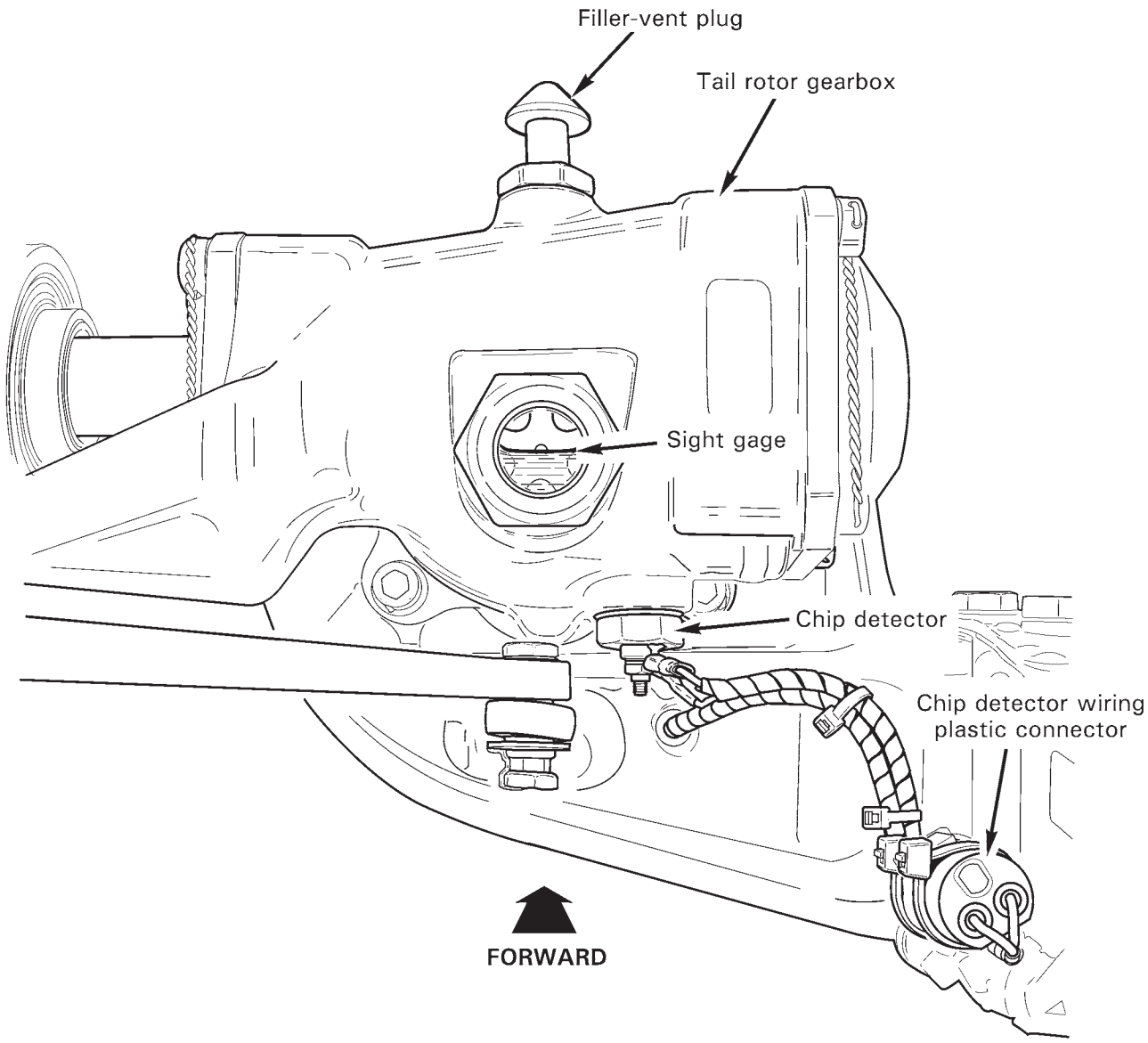

FIGURE 12-3 TAIL ROTOR GEARBOX

12-20 Tail Rotor Gearbox

WARNING

Refer to appropriate Material Safety Data Sheet (MSDS) and take necessary safety precautions when working in proximity to hazardous materials.

12-21 Servicing

NOTE

Inspect tail rotor gearbox for leaks when "top off" is required.

NOTE

Verify aircraft is on level ground when evaluating gearbox oil level.

A. Draining Fluid

1. Refer to Figure 12-3. Cut and discard ty-raps as required and disconnect chip detector wiring from airframe harness at connectors.
2. Place a suitable drain container under gearbox to catch oil, then remove chip detector.

B. Adding Fluid

1. Install chip detector per Section 12-22.
2. Refer to Figure 12-3. Remove filler-vent plug and fill gearbox with A257-22 lubricant to center of sight glass.
3. Install plug and special torque per Section 20-33.

12-22 Chip Detector and Sight Gage

A. Removal

1. Drain tail rotor gearbox oil per Section 12-21.
2. Remove sight gage, as required.

B. Cleaning Chip Detector

1. Clean chip detector per Section 12-13 Part B (main rotor gearbox).

C. Installation

1. Refer to Figure 12-3. Verify cleanliness and clarity of sight gage. As required, remove sight gage per Part A and clean with approved solvent per Section 20-70. Install sight gage and special torque per Section 20-33.
2. Verify cleanliness of chip detector. As required, clean chip detector per Section 12-13 Part B (main rotor gearbox). Install chip detector and special torque per Section 20-33.
3. Connect chip detector wiring and install ty-raps, as required. Cinch ty-raps until snug without over-tightening, and trim tips flush with heads.
4. Turn BATTERY switch ON. Verify TR CHIP warning segment illuminates when test button is depressed. Turn BATTERY switch OFF.
5. Service tail rotor gearbox per Section 12-21.

12-23 Drain and Flush

1. Drain tail rotor gearbox oil per Section 12-21.
2. Install chip detector and special torque per Section 20-33.
3. Remove filler-vent plug and add approximately five ounces of SAE30, SAE40, SAE50, or SAE20W50 straight mineral engine oil to gearbox. Install plug and special torque per Section 20-33.
4. Run-up helicopter approximately five minutes at 60-70% RPM per R66 Pilot's Operating Handbook (POH) Section 4.
5. Drain tail rotor gearbox oil (mineral oil) per Section 12-21.
6. Clean and install chip detector per Section 12-22 Parts B and C.

12-30 Hydraulic System

CAUTION

Do not contaminate hydraulic fluid. Service hydraulic system with clean fluid from sealed containers, using clean tools.

WARNING

Refer to appropriate Material Safety Data Sheet (MSDS) and take necessary safety precautions when working in proximity to hazardous materials.

12-31 Servicing

A. Draining Fluid

1. Perform drain and flush per Section 12-33.

B. Adding Fluid

NOTE

Inspect hydraulic system for leaks when "top off" is required.

1. Refer to Figure 12-4. Remove filler-vent plug. With system filled and bled, fill hydraulic reservoir to center of sight glass with new A257-15 fluid.

2. Install filler-vent plug and special torque per Section 20-33.

12-32 Filter Replacement

1. Refer to Figure 12-4. Remove D516-1 cap and filter and visually inspect element for contaminants. If element is clear, proceed to step 3. If metal contamination is found, use a magnet to determine if metal is ferrous. If metal is ferrous, perform the following:

   a. Install new filter per steps 3 thru 5.

   b. After one flight-hour, remove filter and inspect for ferrous metal. If ferrous metal is found upon second inspection, replace hydraulic pump per Section 67-50, then drain and flush hydraulic system per Section 12-33.

2. Discard cap packing. Clean cap with approved solvent per Section 20-70, and dry cap with compressed air or a lint-free cloth. Lubricate new packing with A257-15 fluid and install on cap.

3. Lubricate packing inside new filter with A257-15 fluid and install filter in reservoir. Install cap and special torque per Section 20-33.

4. Service hydraulic reservoir per Section 12-31.

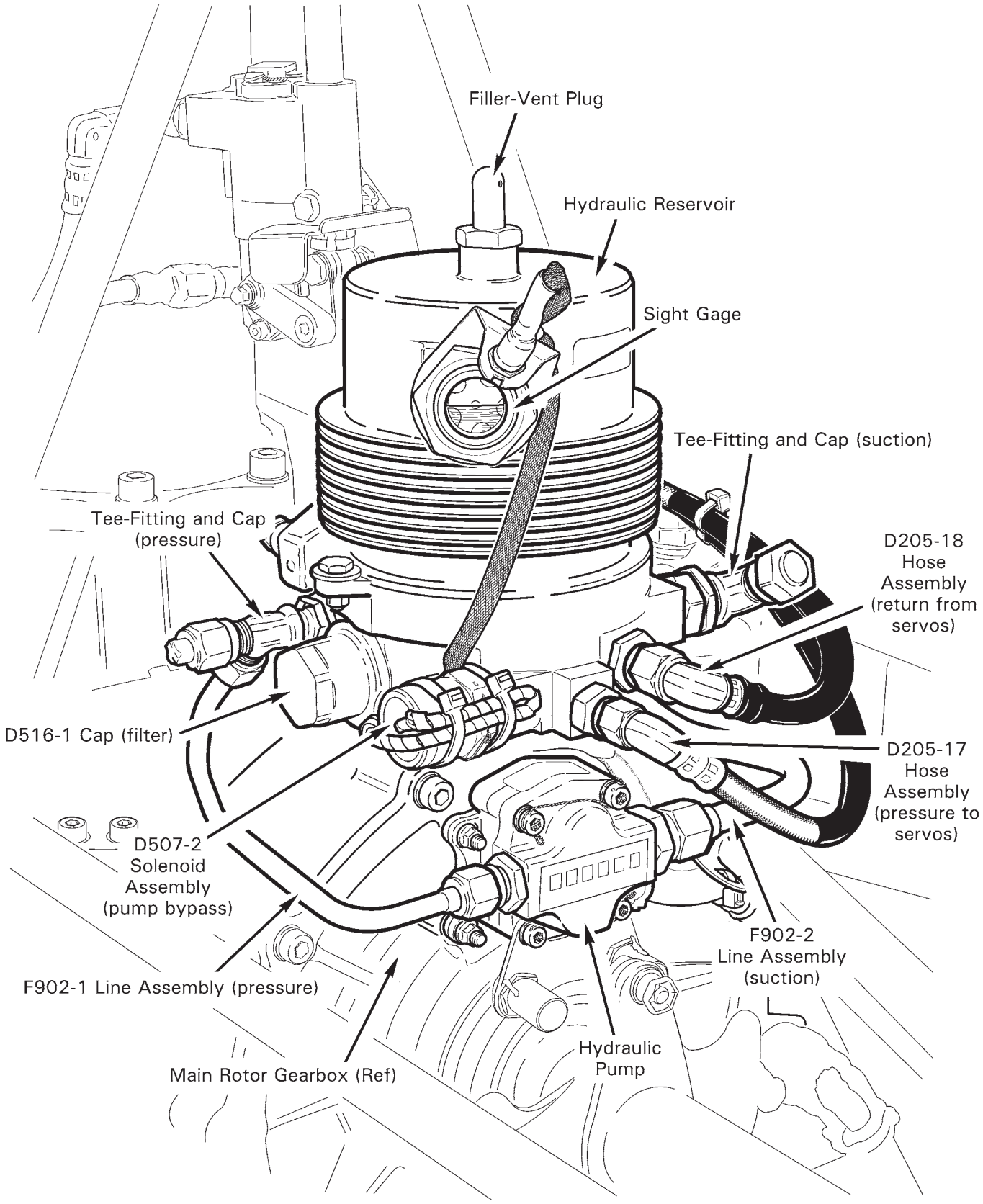

FIGURE 12-4 HYDRAULIC SYSTEM

12-33 Drain and Flush

NOTE

Drain and flush hydraulic system if oil turns dark or emits bad odor.

WARNING

Keep limbs clear of flight controls when operating test pump. Hydraulic forces can cause injury.

1. Refer to Figure 12-4. Remove filler-vent plug. Place a suitable drain container under F902-1 (pressure) and F902-2 (suction) line assembly T-fittings, and remove caps. Pour small amount of new A257-15 fluid into hydraulic reservoir to purge suction line. Pressure line will drain in following step, when D516-1 cap is removed.
2. Replace filter per Section 12-32.
3. Connect MT384 (or equivalent) 0.8-1.2 gpm hydraulic test pump assembly to T-fittings. (Pressure and suction fittings are different sizes to ensure correct connection.)
4. Service hydraulic reservoir per Section 12-31.
5. Disconnect D205-18 hose assembly (return) from reservoir. Place line into drain container; cap union with a T-fitting cap.
6. Activate test pump and inspect hydraulic system for leaks.
7. Simultaneously fully raise collective and move cyclic fully forward then simultaneously fully lower collective and move cyclic fully aft. Monitor reservoir fluid level and fill as required. Repeat procedure until return line fluid is clean.
8. Simultaneously fully raise collective and move cyclic fully aft then simultaneously fully lower collective and move cyclic fully forward. Monitor reservoir fluid level and fill as required. Repeat procedure until return line fluid is clean.
9. Turn off test pump and disconnect equipment. Remove cap and connect hose assembly (return) to reservoir. Using back-up wrench, standard torque hose nut per Section 20-32 and torque stripe per Figure 5-1. Install caps on T-fittings, special torque caps per Section 20-33, and torque stripe per Figure 5-1.
10. Bleed hydraulic system per Section 12-34.
11. Remove cap and filter and visually inspect element for contaminants. If debris is found, repeat drain and flush procedure. If filter is clean, install filter & cap and special torque cap per Section 20-33.
12. Service hydraulic reservoir per Section 12-31.

12-34 Bleeding

WARNING

Keep limbs clear of flight controls when operating test pump. Hydraulic forces can cause injury.

1. Remove F902-1 (pressure) line assembly T-fitting cap. Connect MT384 (or equivalent) 0.8-1.2 gpm hydraulic test pump pressure line to T-fitting. (Pressure and suction fittings are different sizes to ensure correct connection.)

2. Remove filler-vent plug and cover hydraulic reservoir hole with finger to prevent fluid loss (until suction line is connected). Remove F902-2 (suction) line assembly T-fitting cap. Connect test pump suction line to T-fitting. Service reservoir with new A257-15 fluid, as required.

3. Activate test pump and inspect hydraulic system for leaks.

4. Simultaneously fully raise collective and move cyclic fully forward then simultaneously fully lower collective and move cyclic fully aft. Repeat procedure ten times.

5. Simultaneously fully raise collective and move cyclic fully aft then simultaneously fully lower collective and move cyclic fully forward. Repeat procedure ten times.

6. Turn off test pump and verify no leaks in hydraulic system.

7. Cover reservoir hole with finger (until suction line T-fitting is capped). Disconnect test pump suction line from suction line T-fitting and install cap.

8. Disconnect test pump pressure line from pressure line T-fitting and install cap. Special torque caps per Section 20-33 and torque stripe per Figure 5-1.

9. Service hydraulic reservoir per Section 12-31.

12-40 Fuel System

WARNING

Refer to appropriate Material Safety Data Sheet (MSDS) and take necessary safety precautions when working in proximity to hazardous materials.

WARNING

Always fuel helicopter in a well-ventilated area. No smoking within 100 feet of aircraft during fueling.

12-41 Fueling

1. Turn battery switch off.
2. a. **Main Fuel System:** Ground helicopter and ground fuel vehicle. Open fueling cowl door and connect fuel vehicle ground cable to helicopter at location identified by decal.

   b. **Auxiliary Fuel System:** Ground helicopter and ground fuel vehicle. Open baggage compartment door and connect fuel vehicle ground cable to aux fuel tank at location identified by decal.
3. Verify proper grade of aviation fuel. See R66 Pilot's Operating Handbook (POH) Section 2 for approved fuel grades and instructions for use of anti-ice additive.
4. Remove fuel cap and fuel helicopter as required.

   NOTE

   If auxiliary fuel system is installed, press QUANTITY button on aux fuel control panel for aux tank quantity, displayed on fuel quantity gage.
5. a. **Main Fuel System:** Install fuel cap, remove grounding equipment, and close and secure cowl door.

   b. **Auxiliary Fuel System:** Install fuel cap, remove grounding equipment, and close and secure baggage compartment door.

12-42 Defueling

A. Main Fuel System

1. Remove engine cowling per § 53-21.
2. Turn battery switch off. Pull fuel valve control to Off position.
3. Disconnect B283-12 hose at engine and install cap on engine inlet fitting.
4. Position hose into a suitable, grounded drain container.

> NOTE
>
> If desired, perform low-fuel switch assembly check per § 28-22.

5. Push fuel valve control into On position and drain fuel; drain residual fuel via sump valve. Pull fuel valve control to Off position. Perform maintenance tasks as required.
6. Add minimum 5 gallons fuel per § 12-41. Push fuel valve control into On position until fuel flows thru hose without bubbles. Pull fuel valve control to Off position.
7. Remove cap from engine fuel inlet fitting. Connect B283-12 hose, special torque hose nut per § 20-33, and torque stripe per Figure 5-1.
8. Defuel engine as required per RR300 Series Operation and Maintenance Manual (OMM).

B. Auxiliary Fuel System

1. Turn battery switch off. Open baggage compartment door.
2. Release D205-35 (drain) hose assembly from tab. Position hose overboard into a suitable, grounded drain container.
3. Open locking drain valve and drain fuel as required.
4. Close drain valve and secure hose near drain valve at tab. Secure baggage compartment door.

> NOTE
>
> Alternately, and depending on projected operations and main fuel system quantity, fuel may be transferred from the auxiliary fuel tank to the main bladder using the auxiliary fuel pump (use of external power is recommended).

Intentionally Blank

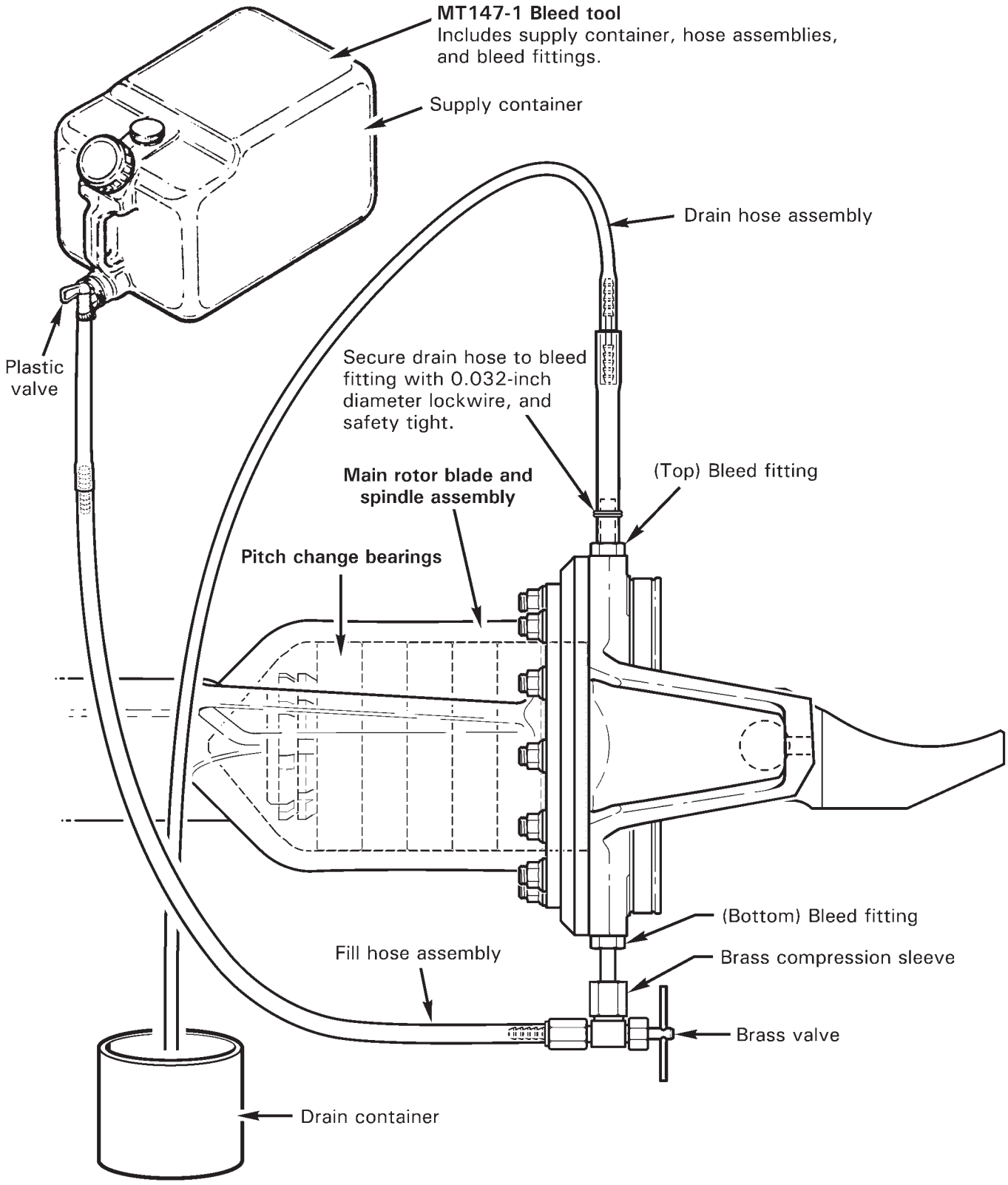

FIGURE 12-5 MAIN ROTOR BLADE PITCH BEARING HOUSING

12-50 Main Rotor Blades

WARNING

Refer to appropriate Material Safety Data Sheet (MSDS) and take necessary safety precautions when working in proximity to hazardous materials.

12-51 Pitch Bearing Housing

NOTE

MT147-1 Main rotor blade spindle air bleed tool includes supply container, hose assemblies, and bleed fittings.

A. Servicing

1. Remove main rotor blades per § 62-10.
2. Refer to Figure 12-5. Place a suitable drain container below main rotor blade spindle assembly. Remove two B289-2 bolts and drain fluid.
3. Install MT147-1 bleed tool fittings into ports. Attach drain hose assembly to (top) bleed fitting, secure with two wraps 0.032-inch diameter lockwire, and safety tight. Position drain hose into drain container.
4. Place supply container with sufficient A257-4 fluid approximately 3 feet above spindle. Route fill hose assembly into drain container and open brass valve. Open supply container plastic valve and purge air from hose. Close valves.
5. Connect brass valve to (bottom) bleed fitting by tightening brass compression sleeve.
6. Open valves and fill spindle housing until no air bubbles are visible in drain hose assembly. Massage spindle boot, “pitch” blade up & down, and raise blade tip up & down to remove trapped air.
7. Remove drain hose assembly and (top) bleed fitting, and install B289-2 bolt. Roll the blade over. After five minutes, inspect the boot for leaks. If no leaks are found, close valves, remove fill hose assembly brass valve and (bottom) bleed fitting, and install other bolt.
8. Torque B289-2 bolts per § 20-33 and torque stripe per Figure 5-1.
9. Repeat steps for opposite blade.

12-60 Engine Oil Servicing

A. Draining Fluid

1. As required, run-up helicopter two to five minutes at 60-70% RPM per R66 Pilot's Operating Handbook (POH) Section 4 to warm engine oil.
2. Remove engine cowling per § 53-21.
3. Place a suitable drain container below B289-2 bolt in bend of F723-1 line assembly, and below AS5169D04 (drain) fitting in F649-1 oil cooler assembly.
4. Remove line assembly bolt and oil cooler assembly (drain) fitting and drain oil.
5. Service the engine oil system per RR300 Series Operation and Maintenance Manual (OMM).

B. Adding Fluid

NOTE

Do not contaminate engine oil. Service engine oil system with clean fluid from sealed containers, using clean tools.

NOTE

When servicing airframe oil tank, full oil quantity is six quarts; minimum quantity for takeoff is four quarts.

Six quart indication is top of knurled section of dipstick. Four quart indication is bottom of knurled section of dipstick or center of oil tank sight gage.

1. Install B289-2 bolt in bend of F723-1 line assembly and special torque per § 20-33.
2. Install AS5169D04 (drain) fitting in F649-1 oil cooler assembly and special torque per § 20-33.
3. Install engine cowling per § 53-21.
4. Open access door, remove dipstick, and service airframe oil tank using approved turbine engine oil per R66 Pilot's Operating Handbook (POH) Section 8.
5. Install dipstick and close access door.
6. Perform engine test per RR300 Series Operation and Maintenance Manual (OMM) as required.

12-70 (Engine) Compressor Rinse and Wash

Refer to R66 Illustrated Parts Catalog (IPC) Figure 71-9.

CAUTION

See RR300 Series Operation and Maintenance Manual (OMM) requirements for compressor rinse and wash intervals.

CAUTION

Always perform compressor rinse or wash with sufficient clearance for possible rotor system rotation.

1. Remove engine cowling per § 53-21.
2. Open access door and remove (engine) compressor fluid-delivery tube cap.
3. Refer to RR300 Series Operation and Maintenance Manual (OMM) for equipment and material requirements. Operate compressor cleaning system per manufacturer's instructions.
4. Connect appropriate cleaning system hose to delivery tube.
5. Refer to RR300 Series OMM for compressor rinse and wash procedures.

   To motor engine without ignition system:

   a. Release rotor brake.
   b. Turn BATTERY switch ON.
   c. Verify fuel cutoff pulled OFF. Verify igniter (key) switched OFF.
   d. Verify area is clear.
   e. Close throttle.
   f. Push and release start button as required to maintain N1 speed for required interval.

6. Disconnect cleaning system hose from delivery tube. Install delivery tube cap and standard torque per § 20-32. Close access door.
7. Refer to RR300 Series OMM for returning engine to service.

   To perform ground run:

   a. Refer to R66 Pilot's Operating Handbook (POH) Section 4 for run-up and shutdown procedures.

8. Install engine cowling per § 53-21.

12-80 Air Conditioning System

12-81 Refrigerant Recovery and System Charging

> NOTE
>
> In the United States, only personnel with EPA certification under Section 609 of the Clean Air Act may charge the system with refrigerant or work on the refrigerant system once it has been charged. Different requirements may apply in countries other than the United States.

Automotive-style air conditioning service equipment, compatible with R134a refrigerant, is required to recover and charge the system with refrigerant. This equipment is available from many manufacturers in varying levels of automation and complexity. Minimum components include a vacuum pump, pressure pump, refrigerant supply, scale to measure refrigerant charge, pressure/vacuum gage, and appropriate lines and fittings.

Ensure that the technician performing the task is appropriately qualified.

A. Refrigerant Recovery

> NOTE
>
> If a leak or other service problem is encountered after system is charged with refrigerant, refrigerant must be recovered before work on system can proceed.

1. Remove tailcone cowling per § 53-23.
2. Automotive-style high- and low-side system service ports are located on G794 hose assemblies where they mount to the compressor assembly. Connect service equipment to system quick-disconnect ports and recover refrigerant per equipment manufacturer's instructions.

B. System Charging

> **CAUTION**
>
> Do not overcharge system. Perform leak detection per Section 12-83 if a leak is suspected, then use correct charge.

1. Remove tailcone cowling per § 53-23.
2. Automotive-style high- and low-side system service ports are located on G794 hose assemblies where they mount to the compressor assembly. Connect service equipment to system quick-disconnect ports.
3. Replace desiccant per § 12-82. Vacuum system, then charge with R134a refrigerant per equipment manufacturer's instructions. Correct charge is 2.25 lb (36 oz) refrigerant.
4. Install tailcone cowling per § 53-23.

12-82 Desiccant Replacement

Refer to R66 Illustrated Parts Catalog (IPC) Figure 21-7.

> NOTE
>
> Replace desiccant when condenser or refrigerant system is exposed to air. To eliminate moisture, replace desiccant, then immediately vacuum system for charging per Section 12-81.

1. Remove engine cowling per Section 53-21.
2. Recover refrigerant per Section 12-81, if not previously accomplished. Remove condenser cap and replace desiccant.
3. Install cap, special torque cap per Section 20-33, and torque stripe.
4. Charge system with refrigerant per Section 12-81.

12-83 Leak Detection

Leaks may be detected using several techniques, depending on equipment available. Leak detection should not be attempted with the aircraft/system running. In addition to safety hazards, leaks are more difficult to detect with the varying pressures and temperatures of an operating system.

An empty system should hold full vacuum (27 to 29 inches mercury vacuum at sea level) with no assistance from the vacuum pump for 20 minutes minimum. If a vacuumed system creeps up in pressure, a leak may be present. The technician should be thoroughly familiar with vacuum equipment to ensure leak is in aircraft system and not in vacuum equipment or connections.

Leaks in a charged system may be detected using a mild soap and water solution applied to lines and fittings in suspected leak areas (bubbles indicate leaks) or using commercially available electronic refrigerant detectors. Follow detector manufacturer's instructions. Large leaks may be detected audibly if area is quiet or by formation of frost in area of leak.

> NOTE
>
> Frost does not necessarily indicate a leak. Normal system operation and/or charging procedures can cause frost to accumulate on some components.

> NOTE
>
> System pressure is not a reliable indicator of charge state or the presence of leaks. Because R134a is a liquid/vapor mixture with the system at rest, pressure will remain constant as more liquid vaporizes until majority of charge is lost.

Very small leaks can be detected by charging the system with helium gas. Helium molecules are smaller than R134a molecules and will leak more quickly. Charge system to 200 psi maximum. Use commercially available electronic helium detector or soap and water solution to locate leaks.

Leaks are most likely to occur at fittings and crimped transitions between hard line and flexible hose. Concentrate initial leak detection efforts in these areas.

Intentionally Blank

CHAPTER 18

TRACK AND BALANCE

Section	Title	Page
18-10	Main Rotor Track and Balance	18.1
18-11	Preparing Helicopter for Main Rotor Track and Balance	18.3
18-12	Flight Checks	18.5
18-13	Track Adjustment	18.7
18-14	Balance Adjustment	18.10A
18-15	Troubleshooting	18.11
18-16	Autorotational RPM Adjustment	18.12
18-20	Tail Rotor Dynamic Balance	18.17
18-21	Preparing Helicopter for Tail Rotor Dynamic Balance	18.17
18-22	Ground Checks	18.19
18-23	Balance Adjustment	18.19
18-30	Main Rotor Flight Control Rigging	18.21
18-40	Main Rotor Blade Angle Rigging	18.23
18-41	Collective Travel	18.24
18-42	Cyclic Travel	18.26
18-50	Tail Rotor Flight Control Rigging	18.28
18-51	Pedals	18.28
18-52	Forward Bellcrank	18.28
18-53	Intermediate Bellcrank	18.28
18-60	Tail Rotor Blade Rigging	18.29
18-70	Fan Shaft and Engine Shaft Balancing	18.33
18-71	Preparing Helicopter for Fan Shaft and Engine Shaft Balancing	18.33
18-72	Ground Checks	18.34

Intentionally Blank

CHAPTER 18

TRACK AND BALANCE

18-10 Main Rotor Track and Balance

NOTE

Calibrate track and balance equipment per manufacturer's recommendation, at least once a year, or if equipment is dropped, misused, or calibration is suspect.

NOTE

The Chadwick-Helmuth Vibrex system, the TEC ACES system, the Dynamic Solutions Systems' MicroVib system, or equivalent equipment is required to perform dynamic rotor balancing and in-flight track checks.

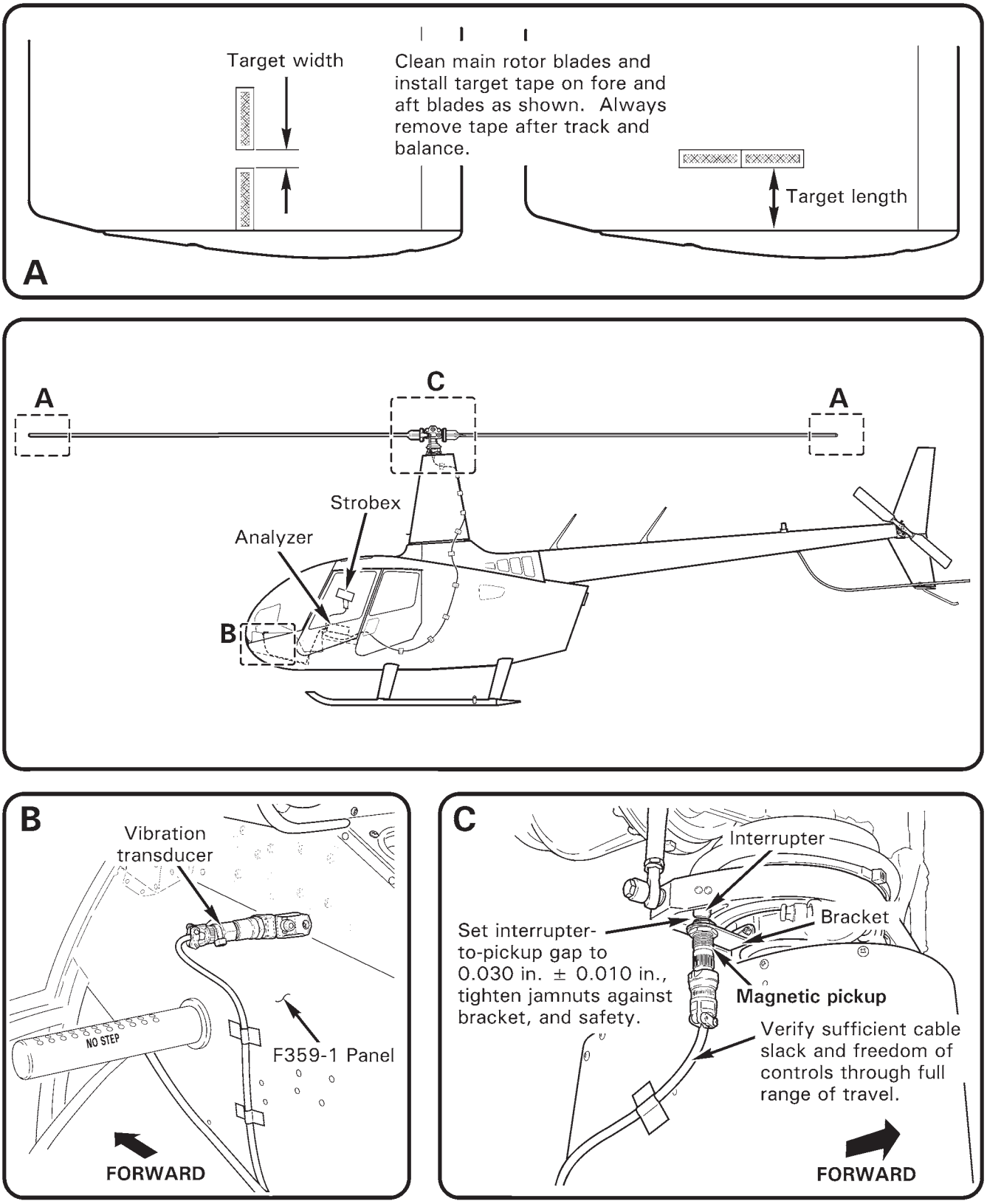

FIGURE 18-1 MAIN ROTOR BALANCING EQUIPMENT INSTALLATION

18-11 Preparing Helicopter for Main Rotor Track and Balance

NOTE

Use the following track & balance procedures in conjunction with approved equipment manufacturer's balancing instructions.

CAUTION

Cable security is critical; helicopter will be flown at V_{NE}.

1. Perform swashplate and rotor hub inspection per Section 5-45. Inspect tail rotor rod ends and elastomeric bearings per Sections 5-33 and 5-34.

2. Clean main and tail rotor blades per Section 20-10. Install main rotor blade target tape per Figure 18-1.

3. Refer to Figure 18-1. Using appropriate hardware, attach brackets to vibration transducer and attach assembly to F359-1 panel as shown. Remove removable controls.

4. Install magnetic pickup onto swashplate bracket. Set (swashplate-mounted) interrupter-to-pickup gap to 0.030 inch ± 0.010 inch and tighten pickup nuts against bracket. Safety nuts using 0.020-inch diameter lockwire. Recheck gap.

5. Pull collective stick full up, push cyclic stick full left, and apply frictions. Connect proper cable to magnetic pickup. Route cable down seam and to base of mast fairing, across the cabin roof left side, and through the aft left door vent door. Attach the cable to the fuselage using MS21919WDG3 clamps and existing fasteners, or secure cable every 12 inches with duct tape. Release control frictions and verify sufficient cable slack and freedom of controls through full range of travel.

6. Connect proper cable to vibration transducer. Connect transducer, magnetic pickup, and tracker or strobe cables to analyzer. If strobe light is used, battery power may be accessed thru auxiliary power socket located on circuit breaker panel. Neatly stow and secure excess cables.

7. Verify security of installation.

DATE _____ SERIAL NO. _____

PAGE _____

CHORD ARM WEIGHTS			
(1) A255-1 Weight	=	(8)	AN970-4 Washers
(1) A255-2 Weight	=	(3)	A255-1 Weights

TIP WEIGHTS			
(1) AN960-10 Washer	=	(2)	AN960-10L Washers
(1) C298-2 Weight	=	(5)	AN960-10 Washers
(1) C298-3 Weight	=	(11)	AN960-10 Washers
(1) C298-4 Weight	=	(4)	C298-3 Weights

TEETER HINGE SHIMS	
C117-8	0.012 inch
C117-9	0.015 inch
C117-10	0.020 inch
C117-11	0.025 inch

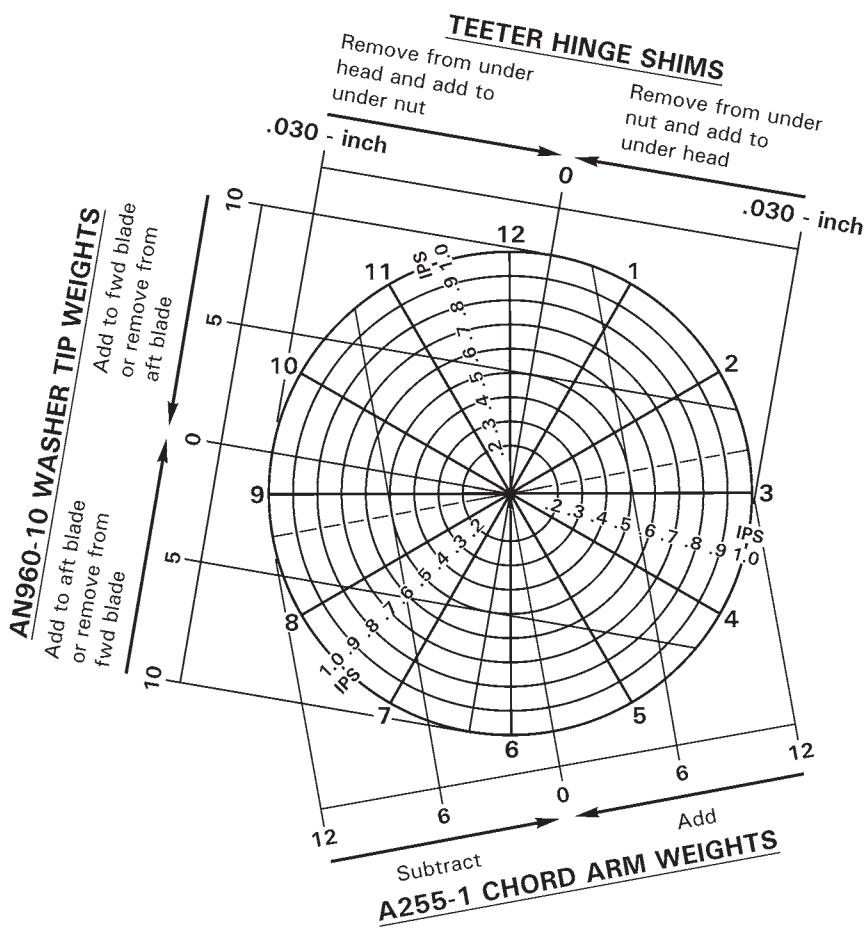

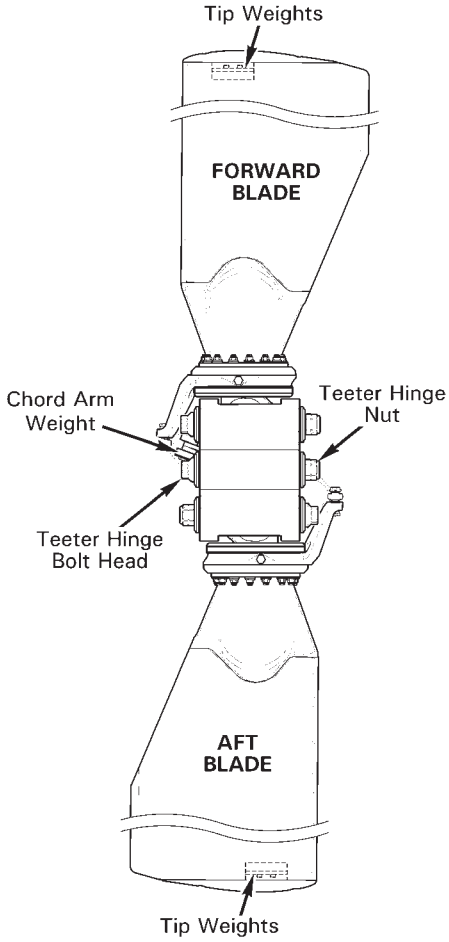

BALANCE		TRACK (KNOTS)										
CLOCK	IPS	HOVER	50	60	70	80	90	100	110	120	130	140

Adjustment: _____

CLOCK	IPS	HOVER	50	60	70	80	90	100	110	120	130	140

Adjustment: _____

CLOCK	IPS	HOVER	50	60	70	80	90	100	110	120	130	140

Adjustment: _____

CLOCK	IPS	HOVER	50	60	70	80	90	100	110	120	130	140

FIGURE 18-2 MAIN ROTOR TRACK AND BALANCE CHART

18-12 Flight Checks

NOTE

Run-up and shutdown helicopter throughout procedure as required per R66 Pilot's Operating Handbook (POH) Section 4.

NOTE

Refer to § 18-15 for track & balance troubleshooting procedures.

WARNING

Tail rotor balancing equipment must be removed for flight.

WARNING

Do not exceed V_{NE} of helicopter during flight checks.

1. Prepare helicopter for main rotor track and balance per § 18-11.
2. As required, make a photocopy of Figure 18-2; use copy to record flight data. Check main rotor blade track in a hover and record data. Maximum blade spread in a hover is 0.25 inch. Adjust track per § 18-13 as required, record change, and recheck blade track in a hover. Repeat step as required until blade track is within limits.
3. Check main rotor balance in a hover and record data. Maximum vibration allowance is 0.2 ips (inches per second). Adjust balance per § 18-14 as required, record data, and recheck balance in a hover. Repeat step as required until main rotor balance is within limits.
4. Fly helicopter at 50, 60, 70, 80, 90, 100, 110, 120, 130, and 140 knots. Check main rotor blade track at each airspeed and record data. Maximum blade spread between airspeeds is 3/8 inch. Adjust trim tab(s) per § 18-13 as required and record data. Repeat step as required until blade track is within limits.
5. Recheck main rotor balance in a hover per step 3.
6. Perform autorotation RPM check per § 18-16. Recheck main rotor balance in a hover per step 3.
7. Evaluate collective trim, longitudinal cyclic trim, and lateral cyclic trim. Adjust as required. Recheck main rotor balance in a hover per step 3.
8. Remove track and balance equipment. Torque stripe fasteners. Reinstall removable controls, as required.

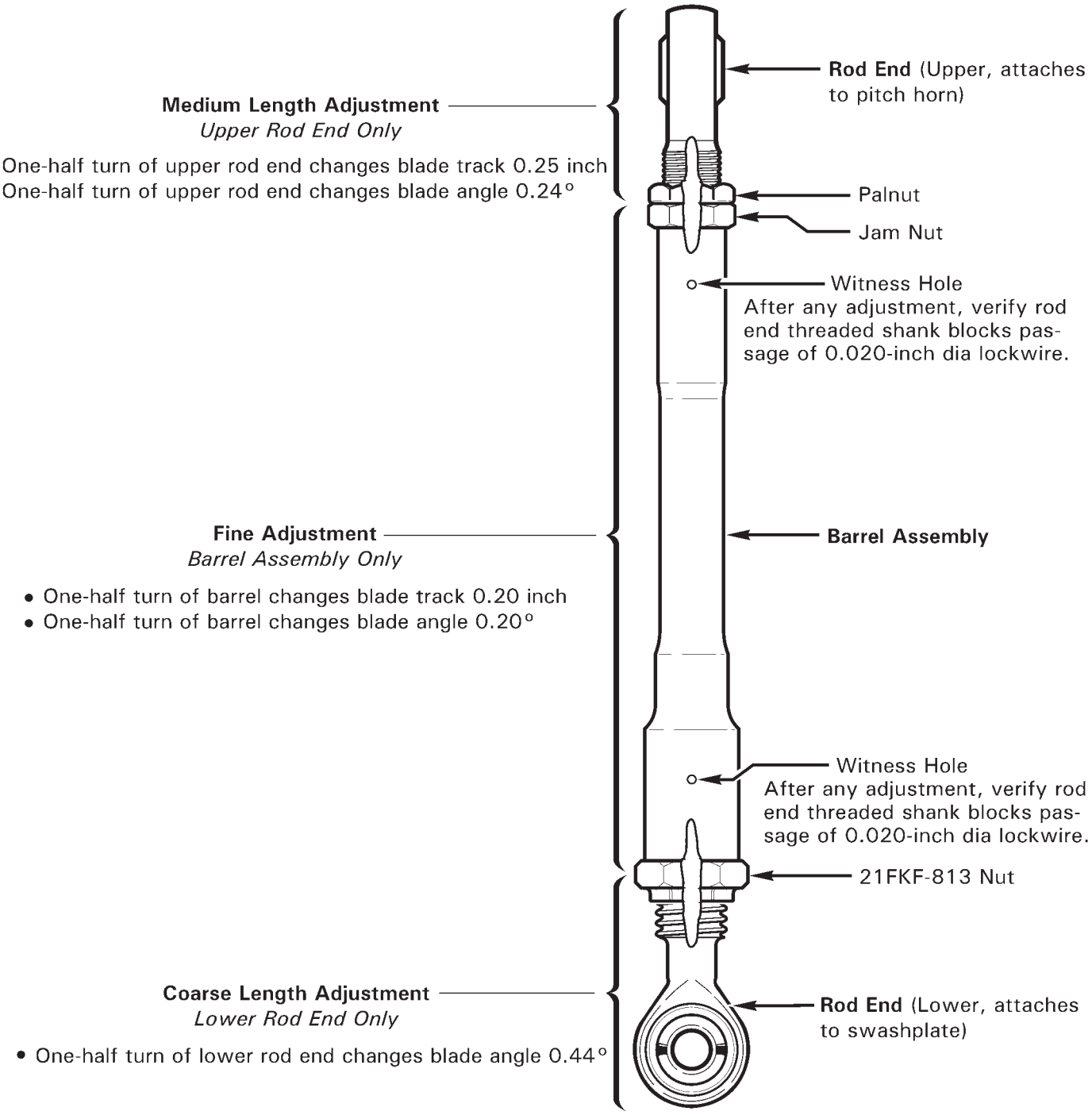

FIGURE 18-3A C258-5 MAIN ROTOR PITCH LINK

18-13 Track Adjustment

A. Main Rotor Blade Pitch Link

NOTE

Shorten high pitch blade when adjusting track in a hover.

NOTE

During rigging, adjust both pitch links exactly the same for collective adjustments.

1. For fine adjustment:

   a. C258-5 Pitch Link: Adjust barrel assembly only per the following steps:

      i. Refer to Figure 18-3A. Using backup wrench on barrel assembly, loosen 21FKF-813 nut at lower rod end, and upper rod end palnut and jam nut.

      ii. Rotate barrel assembly to shorten or lengthen pitch link as required. One-half turn of barrel changes blade track approximately 0.20 inch. One-half turn of barrel changes blade angle approximately 0.20°. For finer adjustment, rotate less than one-half turn as required.

      iii. Refer to Figure 5-1. Verify rod end threaded shank blocks passage of 0.020-inch diameter lockwire through barrel assembly witness holes.

      iv. Position rod ends to allow as much pitch link rotation as possible without binding. Using backup wrench on barrel assembly, special torque 21FKF-813 nut per § 20-33, and standard torque upper rod end jam nut and palnut per § 20-32.

      v. Repeat steps on opposite pitch link as required; torque stripe per Figure 5-1.

   b. C258-1 Pitch Link: Adjust fitting only per the following:

      i. Refer to Figure 18-3B. Cut and discard pitch link assembly safety wire. Using backup wrench on link assembly, loosen 21FKF-813 nut; using backup wrench on fitting, loosen upper rod end palnut and jam nut.

      ii. Rotate fitting to shorten or lengthen pitch link as required. One-half turn of fitting changes blade track approximately 0.20 inch. One-half turn of fitting changes blade angle approximately 0.20°. For finer adjustment, rotate less than one-half turn as required.

      c. Refer to Figure 5-1. Verify rod end threaded shank blocks passage of 0.020-inch diameter lockwire through pitch link witness holes.

      d. Using backup wrench on link assembly, special torque 21FKF-813 nut per § 20-33. Using backup wrench on fitting, standard torque upper rod end jam nut and palnut per § 20-32. Safety fitting to link assembly using 0.032-inch diameter lockwire.

      e. Repeat steps on opposite pitch link as required; torque stripe per Figure 5-1.

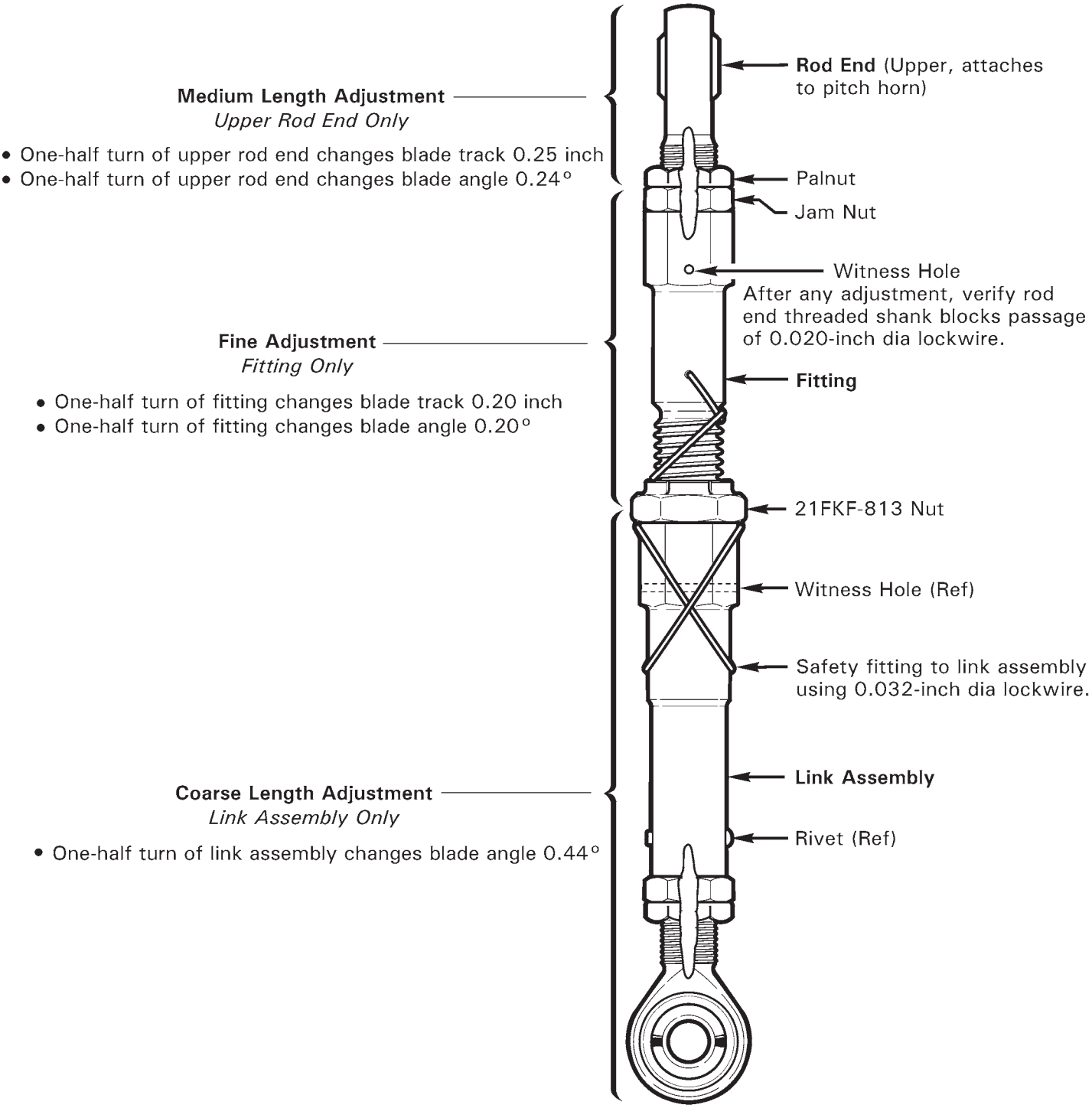

FIGURE 18-3B C258-1 MAIN ROTOR PITCH LINK

18-13 Track Adjustment (continued)

A. Main Rotor Blade Pitch Link (continued)

2. For medium length adjustment, adjust upper rod end per the following:

   a. Refer to Figure 18-3A or 18-3B. Using backup wrench on barrel assembly or fitting, loosen upper rod end palnut and jam nut. Remove hardware securing rod end to pitch horn.

   b. Rotate upper rod end to shorten or lengthen pitch link as required. One-half turn of upper rod end changes blade track approximately 0.25 inch. One-half turn of upper rod end changes blade angle by approximately 0.24°.

   c. Refer to Figure 5-1. Verify rod end threaded shank blocks passage of 0.020-inch diameter lockwire through barrel asssembly (upper), or fitting, witness hole. Install hardware securing rod end to pitch horn and standard torque fasteners per § 20-32.

   d. Position rod ends to allow as much pitch link rotation as possible without binding. Using backup wrench on barrel assembly or fitting, standard torque upper rod end jam nut and palnut per § 20-32.

   e. Repeat steps on opposite pitch link as required; torque stripe per Figure 5-1.

3. For coarse length adjustment:

   a. C258-5 Pitch Link: Adjust lower rod end per the following:

      i. Refer to Figure 18-3A. Using backup wrench on barrel assembly, loosen 21FKF-813 nut at lower rod end. Remove hardware securing lower rod end to swashplate.

      ii. Rotate lower rod end to shorten or lengthen pitch link as required. One-half turn of lower rod end changes blade angle by approximately 0.44°.

      iii. Refer to Figure 5-1. Verify rod end threaded shank blocks passage of 0.020-inch diameter lockwire through barrel asssembly (lower) witness hole. Install hardware securing rod end to swashplate and standard torque fasteners per § 20-32.

      iv. Position rod ends to allow as much pitch link rotation as possible without binding. Using backup wrench on barrel assembly, special torque 21FKF-813 nut per § 20-33.

      v. Repeat steps on opposite pitch link as required; torque stripe per Figure 5-1.

18-13 Track Adjustment (continued)

A. Main Rotor Blade Pitch Link (continued)

3. b. C258-1 Pitch Link: Adjust link assembly per the following:

i. Refer to Figure 18-3B. Cut and discard pitch link assembly safety wire. Using backup wrench on link assembly, loosen 21FKF-813 nut. Remove hardware securing lower rod end to swashplate.

ii. Rotate link assembly to shorten or lengthen pitch link as required. One-half turn of link assembly changes blade angle by approximately 0.44°.

iii. Refer to Figure 5-1. Verify rod end threaded shank blocks passage of 0.020-inch diameter lockwire through link assembly witness hole. Install hardware securing rod end to swashplate and standard torque fasteners per § 20-32.

iv. Position rod ends to allow as much pitch link rotation as possible without binding. Using backup wrench on link assembly, special torque 21FKF-813 nut per § 20-33. Safety fitting to link assembly using 0.032-inch diameter lockwire.

v. Repeat steps on opposite pitch link as required; torque stripe per Figure 5-1.

Intentionally Blank

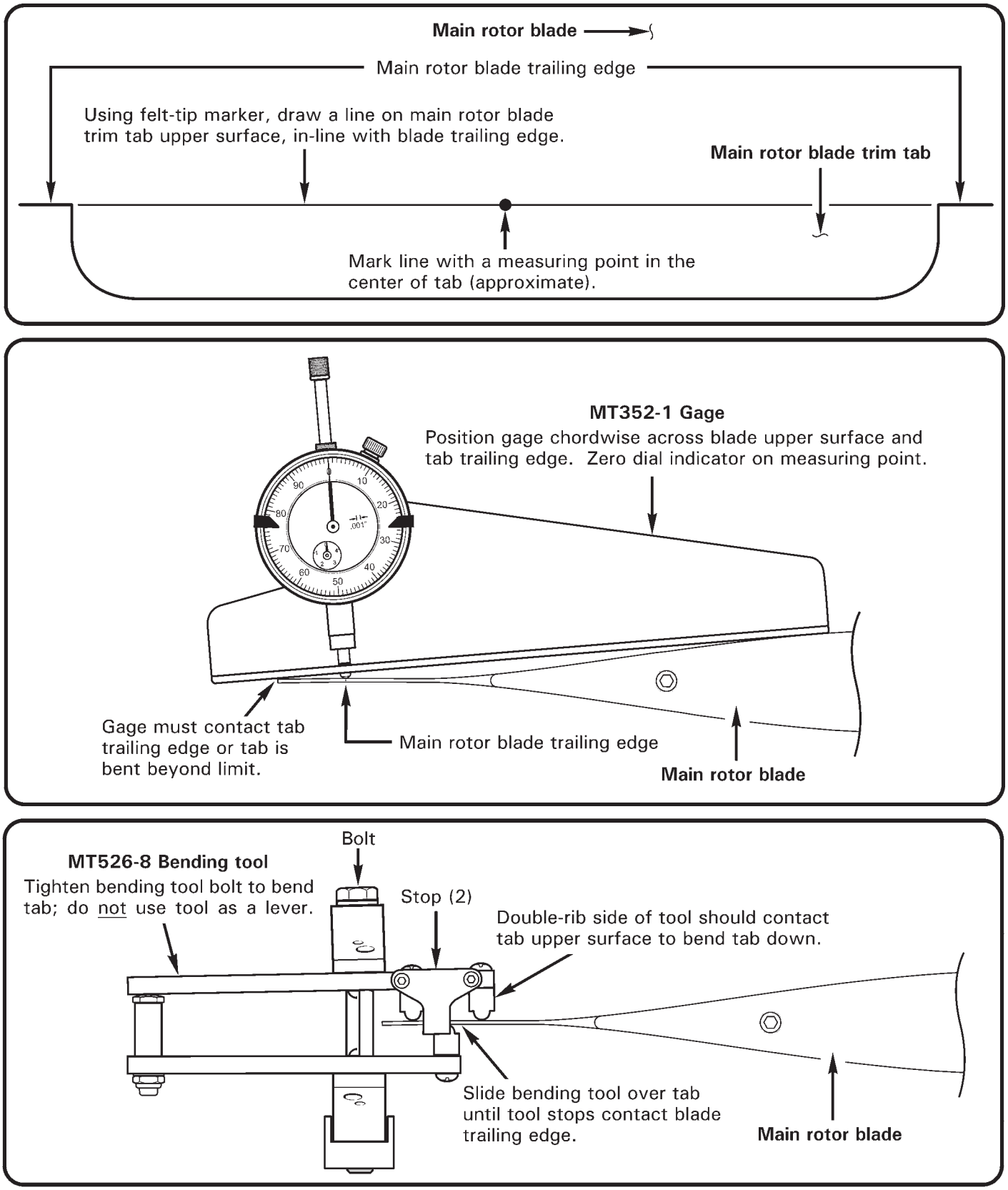

FIGURE 18-4 MAIN ROTOR BLADE TRIM TAB

18-13 Track Adjustment (continued)

B. Main Rotor Blade Trim Tab

NOTE

To correct for a "climbing" blade condition (blade spread that exceeds 3/8 inch with forward airspeed), bend high blade trim tab down.

CAUTION

Do not use other helicopter manufacturers' trim tab bending tools. Use of these tools will damage Robinson blades.

CAUTION

MT352-1 gage must contact trim tab trailing edge. If gage does not contact tab trailing edge, tab is bent beyond limit.

CAUTION

Tighten MT526-8 bending tool bolt to bend tab; do not use tool as a lever.

CAUTION

Bend tab upward only when absolutely necessary; bending tab upward can increase rotor vibration.

1. Using felt tip marker, ink mark main rotor blade trim tab per Figure 18-4. Mark line with a measuring point in the center of the tab (approximate).
2. Position MT352-1 gage chordwise across blade upper surface and tab trailing edge. Zero dial indicator on measuring point.
3. Position MT526-8 bending tool on tab per Figure 18-4. Slide tool completely over tab until tool stops contact blade trailing edge. Double-rib side of tool should contact tab upper surface to bend tab down. Double-rib side of tool should contact tab bottom surface to bend tab up.
4. Tighten MT526-8 bending tool bolt to bend tab. Make slight bends and re-measure tab with MT352-1 gage. Bend trim tab 0.015 inch (down) to effect dynamic movement of main rotor blade tip approximately 0.2 inch (downward).

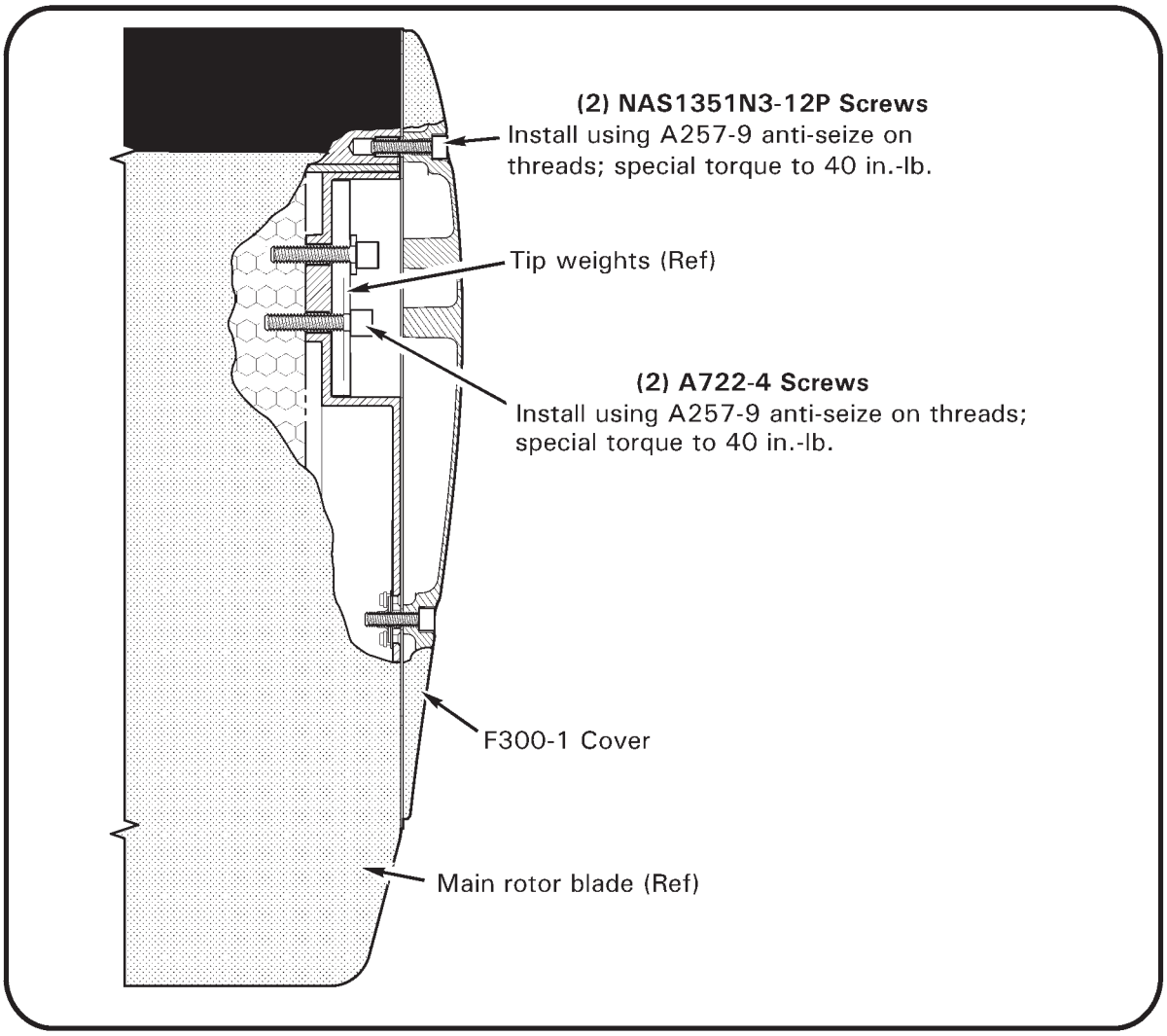

FIGURE 18-4A MAIN ROTOR BLADE TIP

18-14 Balance Adjustment

WARNING

A rotor which is smooth after balancing but goes out of balance within a few flights is suspect and must be examined by RHC before further flight.

A. Tip Weights (Spanwise Balance Adjustment)

1. Remove screws securing tip cover to blade. Balance rotor assembly spanwise by adjusting tip weights as required per Figure 18-2. Washers may be trimmed. Refer to Figure 18-4A. Apply light coat A257-9 anti-seize to threads and install screws securing tip weights to blade; special torque screws to 40 in.-lb. Apply light coat A257-9 anti-seize to threads and install screws securing tip cover to blade; special torque screws to 40 in.-lb.

(1) AN960-10 or NAS1149F0363P Washer	=	(2) AN960-10L or NAS1149F0332P Washers
(1) C298-2 Weight	=	(5) AN960-10 or NAS1149F0363P Washers
(1) C298-3 Weight	=	(11) AN960-10 or NAS1149F0363P Washers
(1) C298-4 Weight	=	(4) C298-3 Weights

B. Teeter Hinge Bolt Shims (Chordwise Balance Adjustment - Coarse Adjustment)

1. Remove and discard teeter hinge nut cotter pin. Remove nut, thrust washer, and any shims.
2. Have two people cone the main rotor blades. Push out teeter hinge bolt (and any shims) with another bolt.
3. Balance rotor assembly chordwise by moving (or exchanging) existing teeter hinge shims to other side of bolt (under head or under nut) as required per Figure 18-2. Install teeter hinge bolt per § 62-10.

C. Chord Arm Weight (Chordwise Balance Adjustment - Fine Adjustment)

1. Balance rotor assembly chordwise by adjusting chord arm weights or washers per Figure 18-2. Total weight not to exceed four A255-2 weights (or equivalent).

(1) A255-1 Weight	=	(8) AN970-4 Washers
(1) A255-2 Weight	=	(3) A255-1 Weights

Intentionally Blank

18-15 Troubleshooting

The following are some of the symptoms and corrections which occur in the Track and Balance operations of the helicopter. Decide on the various causes of a given trouble and then eliminate causes one by one, beginning with the most probable.

	Symptom	Probable Cause	Correction
1.	Excessive Cyclic or Stick Shake	Main rotor (MR) out of track.	Track and balance per Section 18-10.
		Rough or binding A205-7 fork assembly (upper swashplate).	Replace or refer to Section 67-40.
		Brinelled spindle bearing (rough movement).	Send blade(s) to RHC for spindle bearing replacement.
		Rough blade surface (chipped paint).	Repair blades per Section 62-60.
		Rough or binding pitch links.	Replace pitch link rod ends
		MR blade boot misaligned.	Realign or replace boot per Section 62-11.
		MR teeter or coning hinge binding.	Replace bearings per Section 62-21.
		MR blade trim tabs bent upward.	Bend trim tabs evenly down per Section 18-13.
		Blade mismatch.	Send blade(s) to RHC for replacement.
2.	Excessive Ship Vibration	MR out of track and balance.	Track and balance per Section 18-10.
		MR teeter or coning hinge friction.	Adjust hinge friction per Section 62-32.
		MR teeter or coning hinge binding.	Replace bearings per Section 62-21.
		Brinelled spindle bearing (rough movement).	Send blade(s) to RHC for spindle bearing replacement.
		MR teeter hinge bearings worn.	Replace bearings per Section 62-21.
3.	Excessive Cyclic Stick Forces	Brinelled spindle bearing (rough movement).	Send blade(s) to RHC for spindle bearing replacement.
4.	Intermittent Blade Track Picture	MR teeter or coning hinge friction	Adjust hinge friction per Section 62-32.
		MR coning hinge binding.	Replace bearings per Section 62-21.
		MR teeter hinge not "broken-in."	Track and balance per Section 18-10. Adjust track to minimize error.
		Brinelled spindle bearing (rough movement).	Send blade(s) to RHC for spindle bearing replacement.
5.	Radical Changes to Cyclic Trim	MR teeter hinge bearings worn.	Replace bearings per Section 62-21.
		Brinelled spindle bearing (rough movement).	Send blade(s) to RHC for spindle bearing replacement.

18-16 Autorotational RPM Adjustment

Use the following procedure for checking and adjusting autorotational RPM:

WARNING

Failure to properly adjust autorotational RPM (RPM too low) may prevent the rotorcraft from achieving proper RPM at low gross weights.

1. Perform autorotation RPM check at minimum practical gross weight (less than 1900 lb). Calculate the takeoff gross weight of the helicopter. Record the time on the hourmeter.

   Take-Off gross weight: _____

   Take-Off hourmeter reading: _____

2. Set the altimeter to 29.92″ Hg (1013.2 millibars) prior to performing the autorotation. Autorotate with the collective control firmly held against the down stop with an airspeed of 50 KIAS.

WARNING

Do not allow the rotor to overspeed when performing autorotation checks. Progressively lengthen both main rotor pitch link rod ends until full down collective can be obtained without over-speeding the rotor.

Take at least 3 RPM readings at 500 to 1000 foot altitude intervals.

Record the following in-flight data:

Test #	Hourmeter Reading	OAT	Pressure Altitude	Test % RPM
1	_____	_____	_____	_____
2	_____	_____	_____	_____
3	_____	_____	_____	_____
4	_____	_____	_____	_____
5	_____	_____	_____	_____

18-16 Autorotational RPM Adjustment (continued)

3. After test flight, determine the following:

Test #	1	2	3	4	5
Elapsed Time *(in-flight hourmeter reading minus take-off hourmeter reading):*					
Pounds of Fuel Consumed *(elapsed time x 140 lb/hr):*					
Test Gross Weight *(take-off gross weight minus fuel consumed):*					
Test Longitudinal Center of Gravity:					
Chart % RPM*:					
Test % RPM *(from in-flight data):*					
RPM Correction *(chart % RPM minus test % RPM):*					

*Perform step 4 to obtain value.

4. Refer to Figure 18-5. To find Chart % RPM, perform the following:

   a. Start at outside air temperature, and draw a vertical line up to pressure altitude.

   b. Draw a horizontal line from pressure altitude to rotorcraft gross weight at time of autorotation.

   c. Draw a vertical line down from autorotation gross weight to required auto RPM.

5. Adjust pitch links based on average RPM correction required. Lengthen both pitch links to decrease RPM if test RPM is greater than chart RPM; shorten both pitch links to increase RPM. One full rod end turn will change RPM approximately 3½%. Adjust both pitch links exactly the same so track will not be affected.

6. Repeat previous steps as required until the RPM correction is ± 1% of chart RPM.

AUTOROTATION RPM

COLLECTIVE FULL DOWN

50 KIAS

One full turn of rod ends = approximately 3½% RPM change

One full turn of rod end = 1⅙ turns of barrel

Example: OAT = 20°C, Hp = 2000 ft, GW = 1800 lb, RPM = 103%

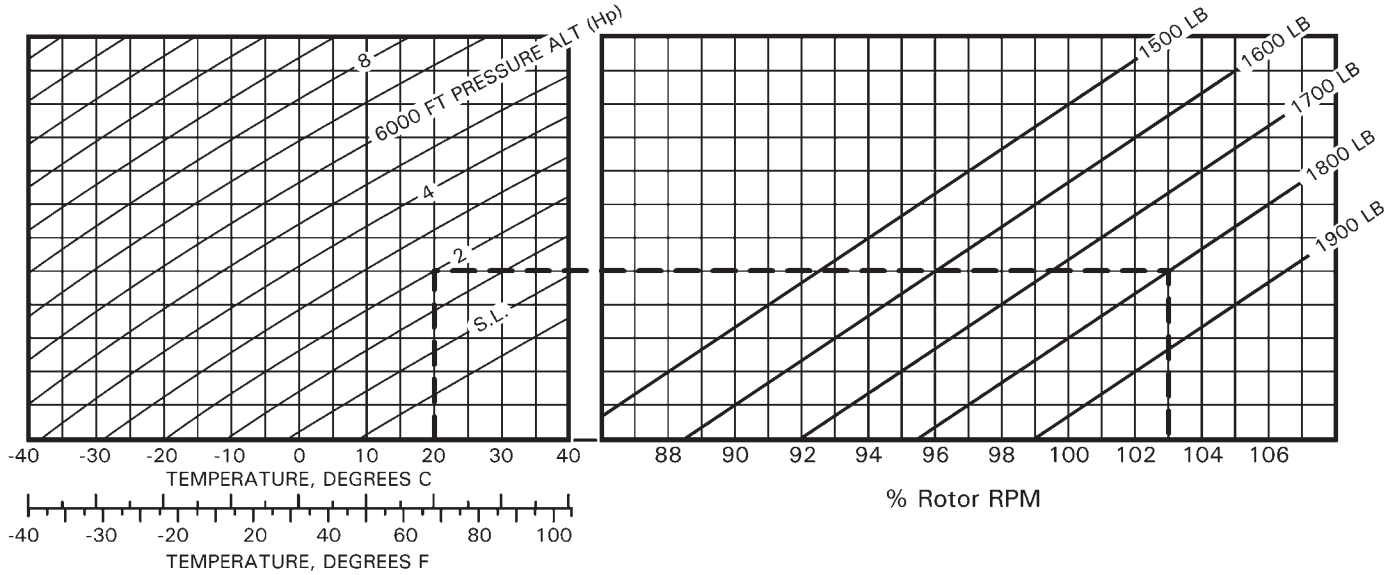

FIGURE 18-5 AUTOROTATION RPM ADJUSTMENT

Intentionally Blank

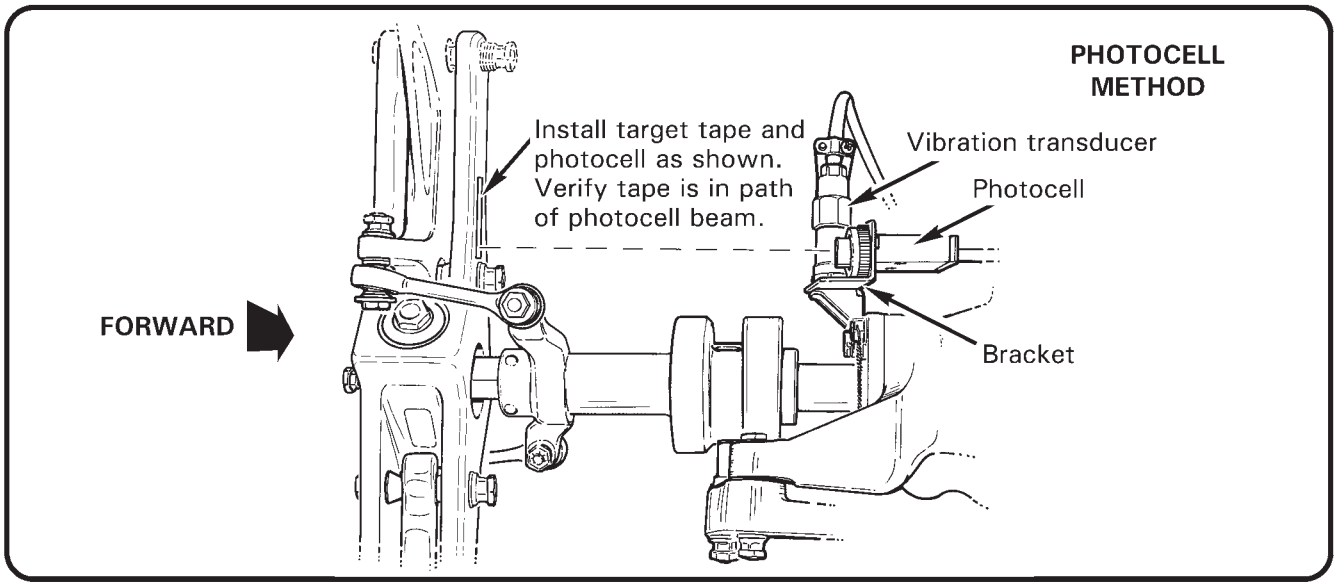

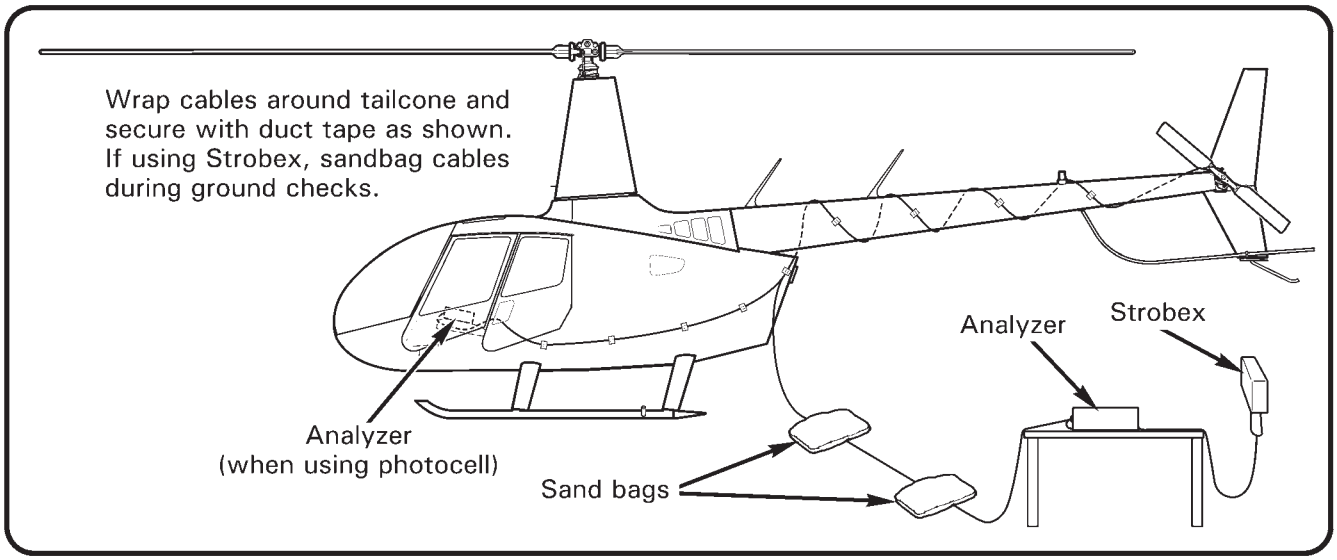

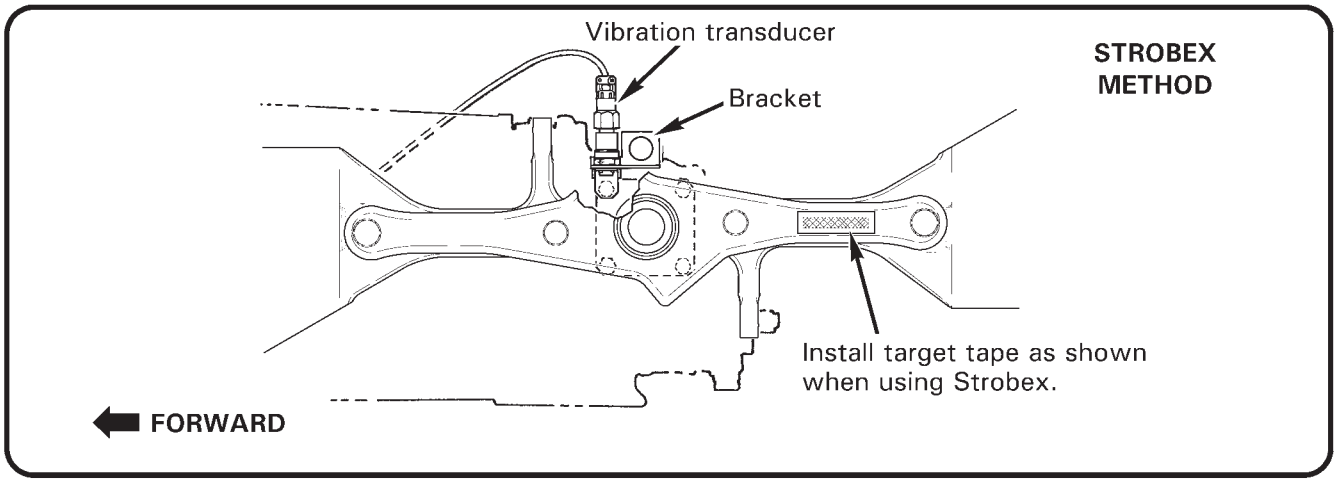

FIGURE 18-6 TAIL ROTOR BALANCING EQUIPMENT INSTALLATION

18-20 Tail Rotor Dynamic Balance

NOTE

Calibrate track and balance equipment per manufacturer's recommendation, at least once a year, or if equipment is dropped, misused, or calibration is suspect.

NOTE

The Chadwick-Helmuth Vibrex system, the TEC ACES system, the Dynamic Solutions Systems' MicroVib system, or equivalent equipment is required to perform dynamic rotor balancing and in-flight track checks.

18-21 Preparing Helicopter for Tail Rotor Dynamic Balance

NOTE

Use the following balance procedures in conjunction with approved equipment manufacturer's balancing instructions.

WARNING

Ensure cable(s) cannot entangle tail rotor.

1. Clean tail rotor blades per Section 20-10. Inspect tail rotor rod ends and elastomeric bearings per Sections 5-33 and 5-34.

2. Track tail rotor blades per Section 64-10.

3. Refer to Figure 18-6. If using photocell to obtain clock angle, install a target tape spanwise on inboard side of one arm of tail rotor hub; if using Strobex, install a target tape spanwise on outboard side of hub.

4. Using appropriate hardware, attach bracket(s) to vibration transducer, and photocell, if used. Secure bracket to tail rotor gearbox output shaft cap at forward, top attachment bolt. Orient vibration transducer vertically.

5. Connect cable(s) to transducer, and photocell, if used. Route cable(s) forward and into cabin; wrap around tailcone several times, and secure with duct tape. If using Strobex, route cable to a position located approximately 20 feet to left of tail rotor. Place sandbags (or similar) on cable to prevent cable movement.

6. Connect cable(s) to balancer. Verify security of installation.

DATE _____ SERIAL NO. _____

PAGE _____

PITCH HORN-TO-PITCH LINK FASTENER (CHORDWISE) WEIGHTS			
(1) NAS1149F0463P Washer	=	(2)	NAS1149F0432P Washers
(1) A214-3 Washer	=	(3.5)	NAS1149F0432P Washers
(1) A141-14 Washer	=	(5)	NAS1149F0432P Washers

BLADE-TO-HUB OUTBOARD FASTENER (SPANWISE) WEIGHTS			
(1) C141-23 Washer	=	(3.5)	NAS1149F0663P Washers
(1) C141-24 Washer	=	(7)	NAS1149F0663P Washers
(2) NAS1149F0632P		(1)	NAS1149F0663P Washer

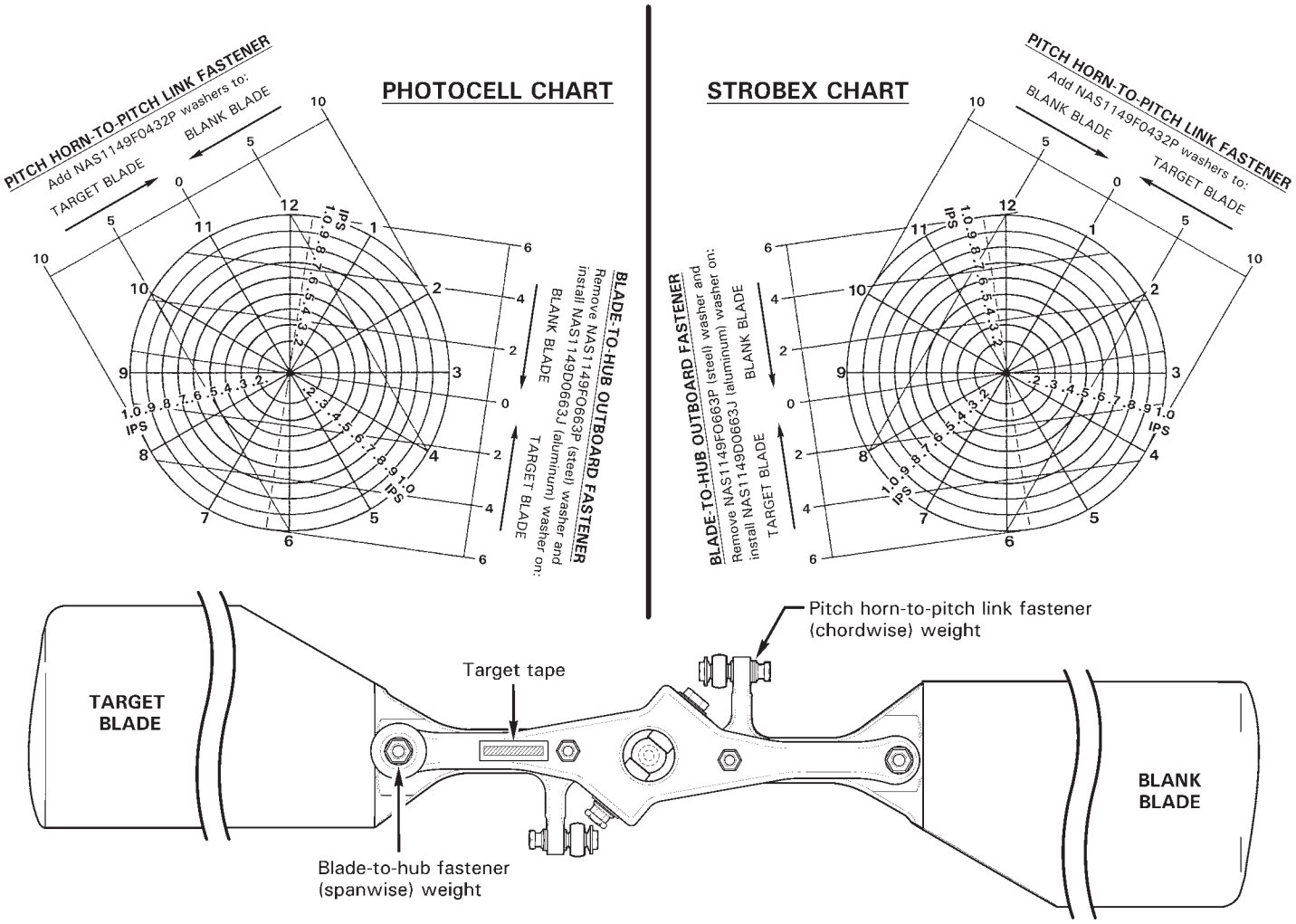

BALANCE	
CLOCK	IPS

ADJUSTMENT: _____

CLOCK	IPS

ADJUSTMENT: _____

CLOCK	IPS

ADJUSTMENT: _____

CLOCK	IPS

ADJUSTMENT: _____

FIGURE 18-7 TAIL ROTOR DYNAMIC BALANCE CHART

18-22 Ground Checks

NOTE

Run-up and shutdown helicopter throughout procedure as required per R66 Pilot's Operating Handbook (POH) Section 4.

NOTE

Use the following balancing procedures in conjunction with approved equipment manufacturer's balancing instructions.

WARNING

Tail rotor balancing equipment must be removed for flight.

1. Prepare helicopter for tail rotor dynamic balance per Section 18-21.

2. Make a photocopy of Figure 18-7; use copy to record ground check data. Check tail rotor balance at 99-101% RPM on ground and record data. Maximum vibration allowance is 0.2 ips (inches per second). (If using Chadwick-Helmuth system, set Function Knob on Balancer to appropriate channel, set balancer RPM Range knob to X10, and set RPM to 231. During ground run, view tail rotor assembly target tape through Strobex and tune Balancer by adjusting RPM dial.)

3. Adjust balance per Section 18-23 as required, record change, and recheck balance. Repeat steps 2 and 3 as required until tail rotor balance is within limits.

4. Remove track and balance equipment. Install tail rotor gearbox output shaft cap forward, top attachment bolt and special torque per Section 20-33. Install 0.032-inch diameter lockwire securing cap retaining hardware and safety in pairs.

WARNING

A rotor which is smooth after balancing but goes out of balance within a few flights is suspect and must be examined by RHC before further flight.

18-23 Balance Adjustment

Refer to R66 Illustrated Parts Catalog (IPC) Figure 64-1. Refer to Section 64-11 for tail rotor assembly static balance procedure.

A. Pitch Horn-to-Pitch Link Fastener (Chordwise Balance Adjustment)

Chordwise dynamic balance is achieved by varying NAS6604 bolt length and nut-side washers on tail rotor blade pitch horn-to-pitch link fastener. Select bolt length and washers as required to balance tail rotor assembly chordwise per Figure 18-7, and to meet torque requirements per Section 20-30. Standard torque nut and palnut per Section 20-32, but do not torque stripe.

B. Blade-to-Hub Outboard Fastener (Spanwise Balance Adjustment)

Spanwise dynamic balance is achieved by varying nut-side washer size on tail rotor blade-to-hub outboard fastener. Four washers are required under outboard nuts. Select a combination of four washers to balance tail rotor assembly spanwise per Figure 18-7, placing largest washers closest to hub assembly. Standard torque nuts and palnuts per Section 20-32, but do not torque stripe.

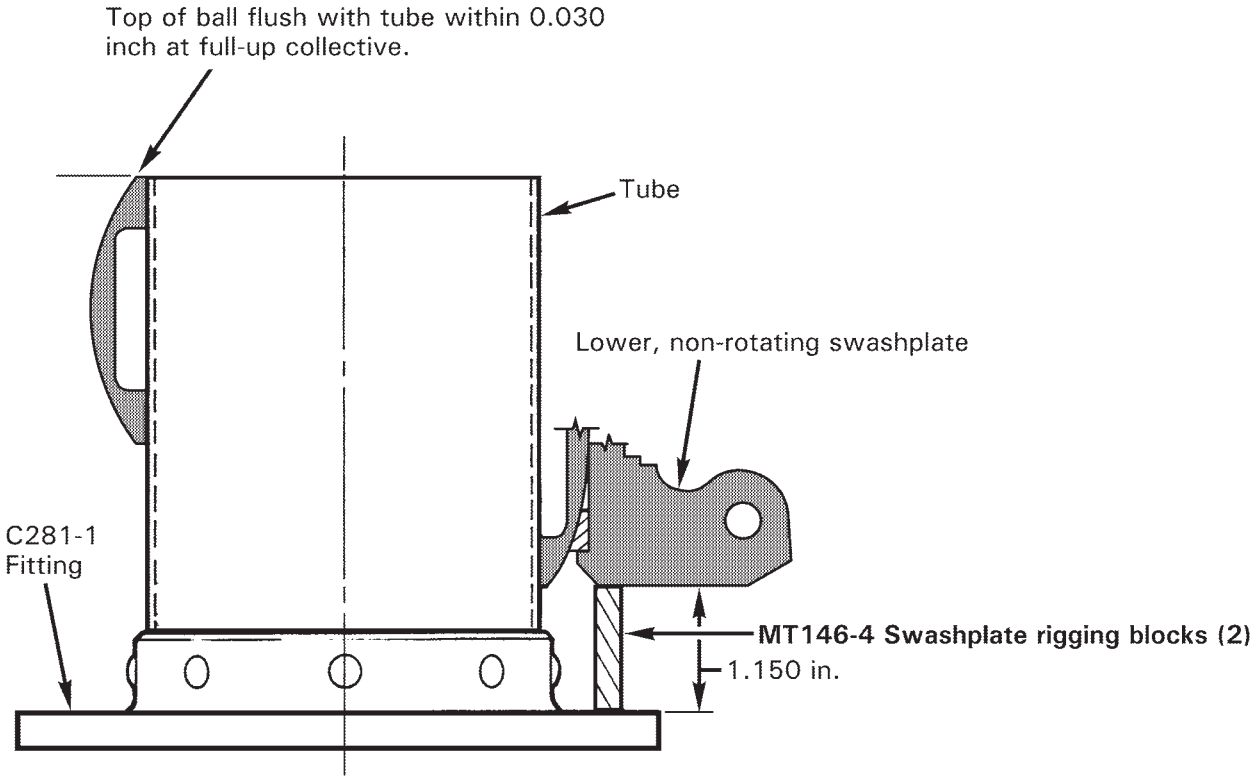

FIGURE 18-8 SWASHPLATE AND COLLECTIVE CONTROL RIGGING

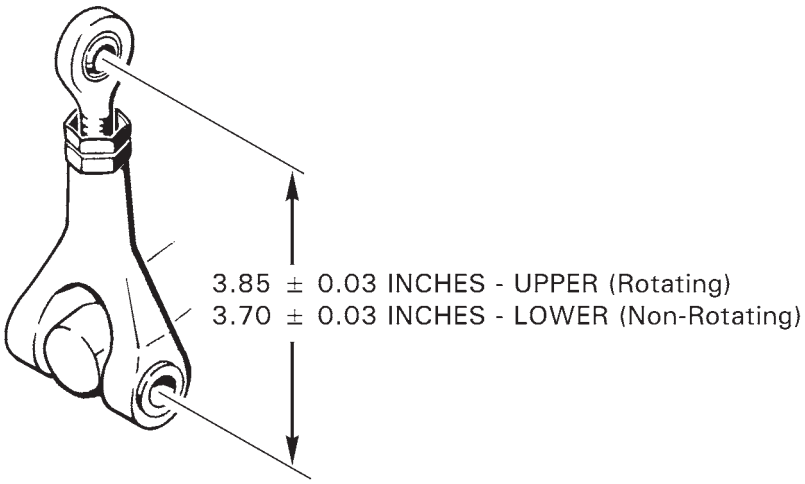

FIGURE 18-9 A205-5 SWASHPLATE FORK RIGGING

18-30 Main Rotor Flight Control Rigging

NOTE

Refer to Section 5-33, and Figures 5-1 & 5-2 for standard rod end adjustment procedures. Refer to Section 18-13 for main rotor pitch link adjustment procedure.

For collective adjustments, both pitch links must be adjusted exactly the same.

Track and balance helicopter per Sections 18-10 & 18-20 as required after adjusting flight controls.

NOTE

Cyclic stick travel is non-adjustable. Travel is limited by A211-4 stop attached to the cyclic box assembly.

Collective stick travel is non-adjustable. Travel is limited by A333-1 stop integral to the collective stick friction assembly. Perform the following check to verify collective travel and swashplate travel do not interfere.

1. Install MT559-1 rigging blocks inside A211-4 cyclic stick stop. Position collective stick full down. Apply cyclic and collective stick frictions.

2. Rig the following push-pull tube assemblies and fork assembly, located between keel panels, to the noted rod end center-to-center dimensions:

PART NUMBER		DIMENSION
C121-1	=	51.15 ± 0.03 inches
F121-1	=	32.36 ± 0.03 inches
G205-1	=	5.40 ± 0.03 inches

3. Adjust length of F121-1 tube so that with collective full up, there is a 0.50 inch gap between G205-1 yoke and F315-1 support.

4. Refer to Figure 18-8. Position MT146-4 swashplate rigging blocks between lower, non-rotating swashplate and C281-1 fitting. Refer to Section 5-33, and adjust push-pull tube rod ends until aligned with swashplate attachment holes.

5. Cut and discard ty-rap(s) as required to lift swashplate boot.

6. Position collective stick full up. Verify top of C201-1 ball assembly is flush with top edge of C208-1 tube within 0.030 inch. Refer to Section 5-33, and adjust push-pull tube rod ends in or out equally to raise or lower swashplate as required.

7. Refer to Figure 18-9. Adjust swashplate A205-5 lower fork assembly (non-rotating) to 3.70 ± 0.03 inch, and upper fork assembly (rotating) to 3.85 ± 0.03 inch.

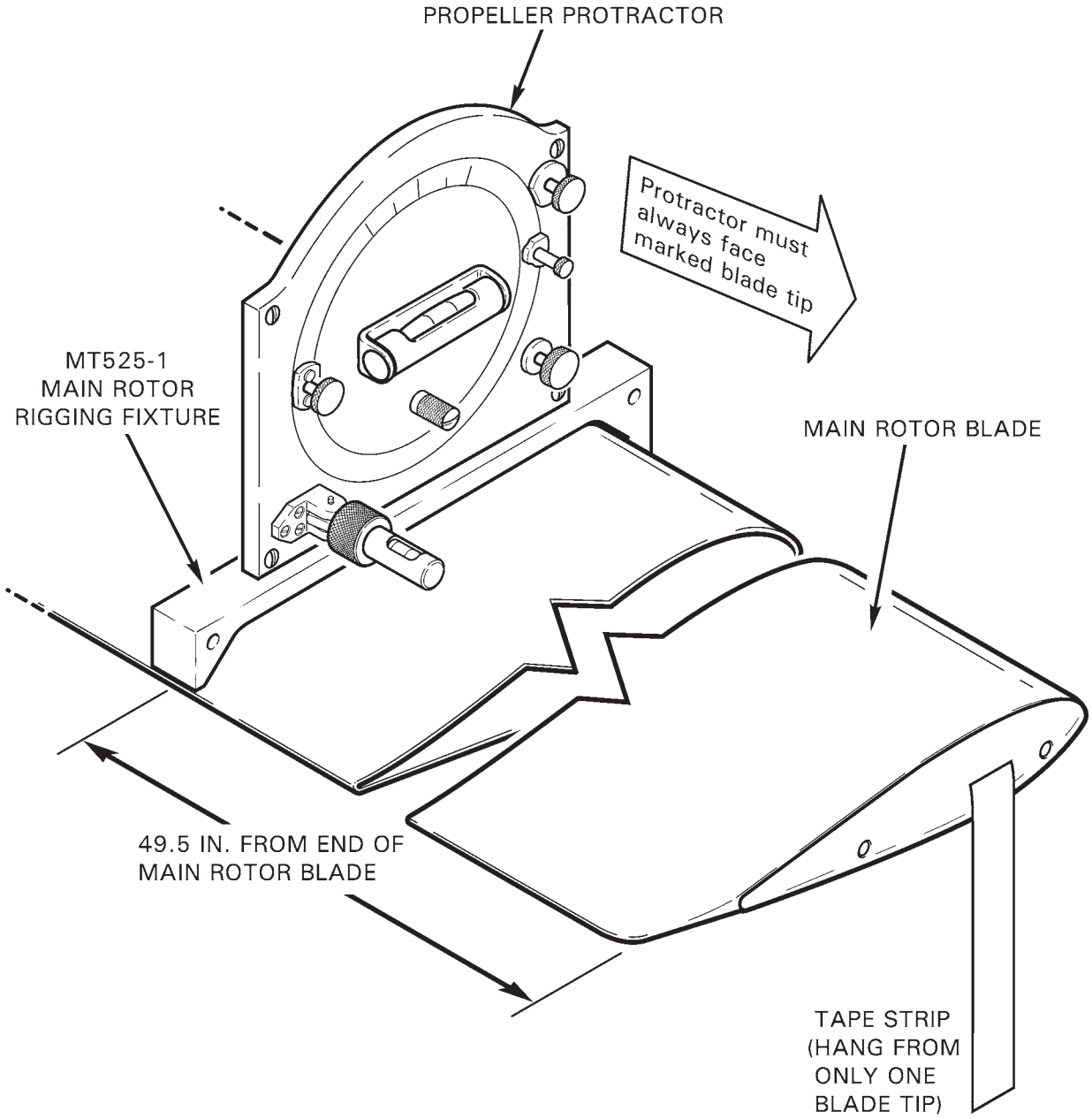

FIGURE 18-10 MAIN ROTOR BLADE RIGGING

18-40 Main Rotor Blade Angle Rigging

A. Procedure

> NOTE
>
> Refer to Section 5-33, and Figures 5-1 & 5-2 for standard rod end adjustment procedures. Refer to Section 18-13 for main rotor pitch link adjustment procedure.

1. Perform main rotor flight control rigging per Section 18-30.
2. Level helicopter laterally and longitudinally via main rotor hub per Section 8-12.
3. Perform collective travel rigging per Section 18-41 Parts A and B.
4. Perform cyclic travel rigging per Section 18-42 Parts A, B, C, and D.
5. Perform track and balance per Section 18-10 as required.

B. Measuring Blade Angles

> NOTE
>
> Hydraulic flight controls must be pressurized while measuring blade angles.

> **WARNING**
>
> **Never adjust flight controls while hydraulics are pressurized. Hydraulic forces can cause injury.**

1. Teeter main rotor hub until blade tips are approximately level. Place a tracking stick at the end of one blade and mark the tip height. Rotate the rotor 180° and mark the opposite blade's tip height. Teeter main rotor hub as required until blade tips are level within 1 inch.
2. Refer to Figure 18-10. Using felt tip marker, mark upper surface of both main rotor blades 49.5 inches inboard of seam between blade tip and tip cover. Lay 1-inch wide length of masking tape chordwise on each blade, centered over marking. Mark each rotor blade with a different color designation, such as red and blue.
3. Hang a 6-inch length of masking tape from one blade tip for reference. Zero Kell-Strom KS113 propeller protractor (or equivalent) on top of the main rotor hub, parallel to the teeter hinge bolt, at location marked "LEVEL HERE". During zeroing, point protractor face toward the blade with hanging tape. When taking blade angle readings, always point protractor face toward the blade with hanging tape.
4. Position MT525-1 fixture on top of the blade's tape at 49.5 inches, and tight against the leading edge. Position protractor on top of fixture, point protractor face toward the blade with hanging tape, and take blade angle reading.

18-41 Collective Travel

> NOTE
>
> Lengthening pitch links increases blade angles.

> NOTE
>
> When making adjustments, keep pitch links as close to neutral (mid-travel) position as possible to preserve the adjustment range for flight checks.

A. Collective Down

1. Refer to Figure 18-8. Position collective stick full up and apply friction. Place MT759-1 rigging blocks around cyclic stick in cyclic box assembly. Verify top of ball is flush with tube within 0.030 inch. Adjust all swashplate push-pull tubes exactly the same amount as required (one full turn = 0.48°).

2. Position collective stick full down and apply friction.

3. Rotate blades so pitch links are aligned with helicopter longitudinal axis.

4. Measure and record blade angles per Section 18-40 Part B to determine the values below. Rotate blades 180° and align per step 3 as required.

BLUE BLADE		**RED BLADE**	
Pitch horn forward	_____°	Pitch horn forward	_____°
Pitch horn aft +	_____°	Pitch horn aft +	_____°
=	_____°	=	_____°
÷ 2 =	_____°	÷ 2 =	_____°

5. Blade angles must average between 1.0° and 2.0° for collective down position. (Final blade angle for collective down position is determined during autorotation rpm adjustment.) Adjust main rotor blade pitch links per Section 18-13 as required (one full barrel turn = 0.72°) until blade angles, when blades are positioned pitch horn forward, are within 0.2°. Adjust pitch links until blade angles, when blades are positioned pitch horn aft, are also within 0.2°.

> NOTE
>
> After making adjustments, position collective stick full up and apply friction. Verify top of swashplate ball is flush with tube within 0.030 inch per Figure 18-8. Adjust all swashplate push-pull tubes exactly the same amount as required (one full turn = 0.48°). Lengthening all push-pull tubes increases blade angles.

18-41 Collective Travel

B . Collective Up

1. Position collective stick full up and apply friction. Place MT759-1 rigging blocks around cyclic stick in cyclic box assembly.

2. Rotate blades so pitch links are aligned with helicopter longitudinal axis.

3. Measure and record blade angles per Section 18-40 Part B to determine the values below. Rotate blades 180° and align per step 2 as required.

BLUE BLADE		**RED BLADE**	
Pitch horn forward	_____°	Pitch horn forward	_____°
Pitch horn aft	+ _____°	Pitch horn aft	+ _____°
	= _____°		= _____°
	÷ 2 = _____°		÷ 2 = _____°

4. For collective up position, blade angles must average between 12.5° and 13.5° more than collective down position average. Adjust main rotor blade pitch links per Section 18-13 as required (one full barrel turn = 0.72°) until blade angles, when blades are positioned pitch horn forward, are within 0.2°. Adjust pitch links until blade angles, when blades are positioned pitch horn aft, are also within 0.2°.

> NOTE
>
> Remeasure collective down blade angles after making adjustment for collective up blade angles.

> NOTE
>
> After making adjustments, position collective stick full up and apply friction. Verify top of swashplate ball is flush with tube within 0.030 inch per Figure 18-8. Adjust all swashplate push-pull tubes exactly the same amount as required (one full turn = 0.48°). Lengthening all push-pull tubes increases blade angles.

18-42 Cyclic Travel

A. Cyclic Left

1. Position collective stick full down. Position cyclic stick in the longitudinal neutral (mid travel) position, and against left stop. Apply control frictions; sandbag cyclic stick as required.

2. Rotate blades so pitch links are aligned with helicopter lateral axis.

3. Measure and record blade angles per Section 18-40 Part B to determine the values below. Rotate blades 180° and align per step 2 as required.

BLUE BLADE		RED BLADE	
Pitch horn right	_____°	Pitch horn right	_____°
Pitch horn left +	_____°	Pitch horn left +	_____°
=	_____°	=	_____°
÷ 2 =	_____°	÷ 2 =	_____°

4. Blade angles must average between 7.5° and 8.5° for cyclic left position. Adjust swashplate forward left or right push-pull tube as required (one full turn = 0.6°).

B. Cyclic Right

1. Position collective stick full down. Position cyclic stick in the longitudinal neutral (mid travel) position, and against right stop. Apply control frictions; sandbag cyclic stick as required.

2. Rotate blades so pitch links are aligned with helicopter lateral axis.

3. Measure and record blade angles per Section 18-40 Part B to determine the values below. Rotate blades 180° and align per step 2 as required.

BLUE BLADE		RED BLADE	
Pitch horn right	_____°	Pitch horn right	_____°
Pitch horn left +	_____°	Pitch horn left +	_____°
=	_____°	=	_____°
÷ 2 =	_____°	÷ 2 =	_____°

4. Blade angles must average between 6.0° and 7.0° for cyclic right position. Adjust swashplate forward left or right push-pull tube as required (one full turn = 0.6°).

> NOTE
>
> Remeasure cyclic left blade angles after making adjustment for cyclic right blade angles.

18-42 Cyclic Travel (continued)

C. Cyclic Forward

1. Position collective stick full down. Position cyclic stick in the lateral neutral (5 inches to left of right stop) position, and against forward stop. Apply control frictions; sandbag cyclic stick as required.

2. Rotate blades so pitch links are aligned with helicopter longitudinal axis.

3. Measure and record blade angles per § 18-40 Part B to determine the values below. Rotate blades 180° and align per step 2 as required.

BLUE BLADE		**RED BLADE**	
Pitch horn forward	_____°	Pitch horn forward	_____°
Pitch horn aft	+ _____°	Pitch horn aft	+ _____°
	= _____°		= _____°
	÷ 2 = _____°		÷ 2 = _____°

4. Blade angles must average between 13.50° and 14.25° for cyclic forward position. Adjust swashplate aft push-pull tube as required (one full turn = 0.44°). A coarse adjustment can be made by adjusting swashplate forward push-pull tubes exactly the same amount (one full turn = 0.6°).

D. Cyclic Aft

1. Position collective stick full down. Position cyclic stick in the lateral neutral (5 inches to left of right stop) position, and against aft stop. Apply control frictions; sandbag cyclic stick as required.

2. Rotate blades so pitch links are aligned with helicopter longitudinal axis.

3. Measure and record blade angles per § 18-40 Part B to determine the values below. Rotate blades 180° and align per step 2 as required.

BLUE BLADE		**RED BLADE**	
Pitch horn forward	_____°	Pitch horn forward	_____°
Pitch horn aft	+ _____°	Pitch horn aft	+ _____°
	= _____°		= _____°
	÷ 2 = _____°		÷ 2 = _____°

4. Blade angles must average between 13.50° and 14.25° for cyclic aft position. Adjust swashplate aft push-pull tube as required (one full turn = 0.44°). A coarse adjustment can be made by adjusting swashplate forward push-pull tubes exactly the same amount (one full turn = 0.6°).

> NOTE
>
> Remeasure cyclic forward blade angles after making adjustment for cyclic aft blade angles.

18-50 Tail Rotor Flight Control Rigging

Refer to R66 Illustrated Parts Catalog (IPC) Figures 67-29 thru 67-39.

18-51 Pedals

1. Refer to Figure 67-4. Insert a 3/16-inch diameter rigging pin through the hole in the right-hand keel panel and the rigging pin holes in the C317-7 bellcrank.

2. Adjust the F121-9 push-pull tube as required to obtain a dimension of 5.24 ± 0.03 in. from the lower forward NAS6604-9 bolt in C317-5 or C317-9 bellcrank and horizontal pedal torque tube.

18-52 Forward Bellcrank

Remove the rigging pin and place the left pedal against its stop. Adjust the F121-11 push-pull tube to obtain 1.08 - 1.18 inches between the end of the rod end and the bulkhead.

18-53 Intermediate Bellcrank

With left pedal at stop, adjust the C121-17 push-pull tube length as required to obtain 0.35 ± 0.03 inch between two faces of pitch control assembly and the housing.

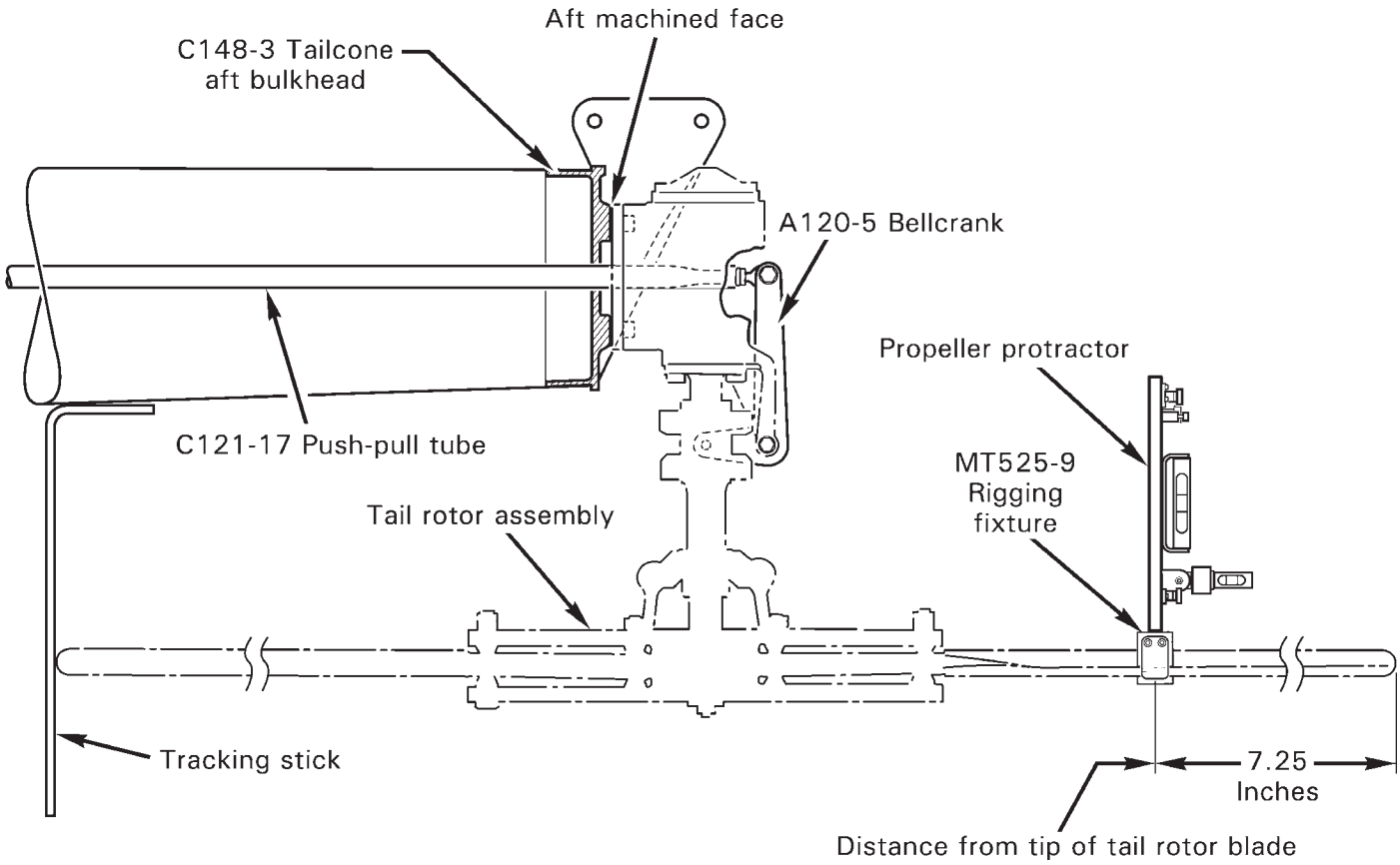

FIGURE 18-11 TAIL ROTOR BLADE RIGGING

18-60 Tail Rotor Blade Rigging

1. Level helicopter laterally, and longitudinally via main rotor hub, per § 8-12.

2. Place left (or right) pedal against its stop. Position tail rotor blades parallel to the tailcone.

3. Refer to Figure 18-11. Tape a tracking stick to tailcone at blade tip. A tracking stick can be made using a 1″ x 12″ strip of aluminum with a 90º bend 2 inches from one end.

4. Rotate tail rotor shaft weldment and mark tracking stick where each blade tip drain hole passes. Adjust (teeter) tail rotor hub on output shaft until both blade tips pass the same point on the tracking stick.

5. Using felt tip marker, mark inboard surface of both tail rotor blades 7.25 inches from each blade tip. Lay 1-inch wide strip of masking tape chordwise on each blade, centered over marking. Mark each blade with a different color designation, such as red or blue.

6. Have a second person hold one blade tip at the left pedal track mark with the left pedal against its stop. Position MT525-2 rigging fixture on the aft blade, against the inboard surface. Position propeller protractor against the fixture, measure the blade angle, and record data below. Rotate the tail rotor 180º, and record the opposite blade angle.

		Pedals Full Left	
Blue Blade		_____º	
Red Blade	+	_____º	
	=	_____º	
	÷ 2 =	_____º	(18.5/19.0º required)

7. Difference between blue and red blade angles may not exceed 0.4º. If blade angles exceed this limit, remove tail rotor assembly per § 64-10, rotate assembly one-half revolution, and install assembly per § 64-10. Repeat previous steps. If blade angles still exceed relative limit, contact RHC Technical Support for replacement blade assistance.

8. Adjust C121-17 push-pull tube rod ends per § 5-33 and Figures 5-1 & 5-2 as required to obtain blade angle between 18.5º and 19.0º. One full turn of the rod end will change the blade angle 0.33º.

9. Have a second person hold one blade tip at the right pedal track park with the right pedal against its stop. Position MT525-2 rigging fixture on the aft blade, against the inboard surface. Position propeller protractor against the fixture, measure the blade angle, and record data below. Rotate the tail rotor 180º, and record the opposite blade angle.

		Pedals Full Right	
Blue Blade		_____º	
Red Blade	+	_____º	
	=	_____º	
	÷ 2 =	_____º	(15.5/16.5º required)

10. Adjust C121-17 push-pull tube rod ends per § 5-33 and Figures 5-1 & 5-2 as required to obtain blade angle between 15.5º and 16.5º. If adjusted, recheck left pedal blade angles per previous steps.

18-60 Tail Rotor Blade Rigging (continued)

11. If the blade angle range for left and right pedal settings cannot be obtained using the preceding steps, pedal total travel is either too great or too small. Use the following procedure to check and adjust pedal travel:

    a. Add right and left pedal blade angles together. If total is less than 34.0°, pedal total travel is too small. If total is greater than 35.5°, pedal total travel is too great.

    b. If pedal total travel is too small, increase C343-11 push-pull tube length and/or decrease C343-13 push-pull tube length.

    c. If pedal total travel is too great, decrease C343-11 push-pull tube length and/or increase C343-13 push-pull tube length.

    d. Recheck left and right pedal blade angles per previous steps.

12. Balance tail rotor per § 18-20.

Intentionally Blank

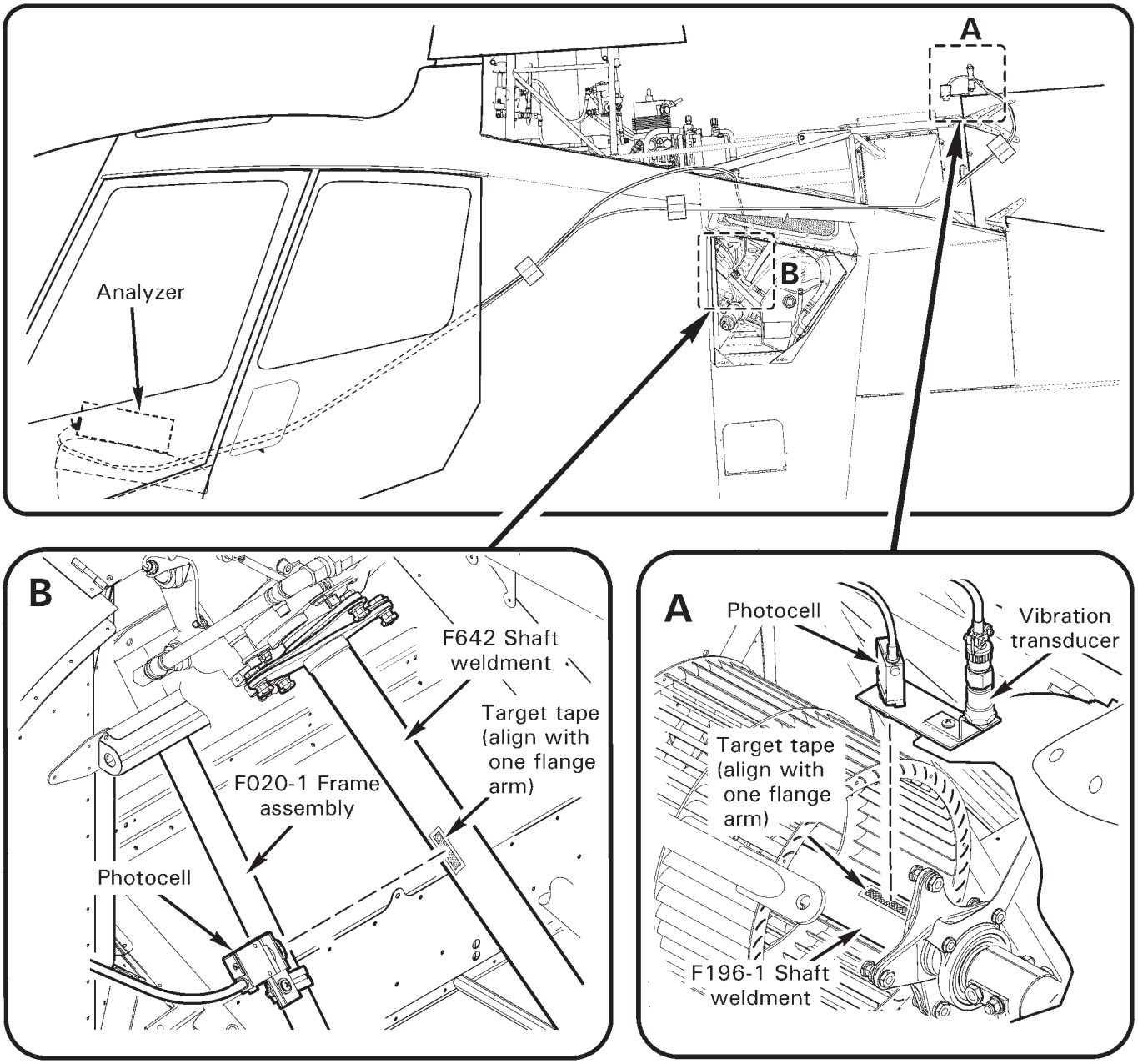

FIGURE 18-12 FAN SHAFT AND ENGINE SHAFT BALANCING

18-70 Fan Shaft and Engine Shaft Balancing

> NOTE
>
> Calibrate track and balance equipment per manufacturer's recommendation, at least once a year, or if equipment is dropped, misused, or calibration is suspect.

> NOTE
>
> The Chadwick-Helmuth Vibrex system, the TEC ACES system, the Dynamic Solutions Systems' MicroVib system, or equivalent equipment is required to perform dynamic rotor balancing and in-flight track checks.

18-71 Preparing Helicopter for Fan Shaft and Engine Shaft Balancing

> NOTE
>
> Use the following balance procedures in conjunction with approved equipment manufacturer's balancing instructions.

1. Remove tailcone cowling per § 53-23. Clean F196-1 fan shaft weldment, G174-1 fanwheel assembly, and F642 shaft weldment. Inspect condition of flex plates, weldment flanges, and adjacent yokes. Verify proper fastener installation and unbroken torque stripe.

2. Refer to Figure 18-12.

   a. Fan Shaft: Using a #8 screw, attach vibration transducer and photocell (cables pointed up) to mounting bracket(s). Secure bracket(s) to top of tailcone at the forward nutplate, aiming photocell toward center of shaft.

   b. Engine Shaft: Using appropriate hardware, attach photocell (cable pointed outboard toward access door) to mounting bracket. Secure bracket to F020-1 frame assembly using MS21919WDG16 clamp and associated hardware, aiming photocell toward center of shaft.

3. Install a target tape on each shaft weldment and align tape with a flange arm. Verify photocell beam will hit target tape. (Tape becomes the 12 o'clock position.)

4. Route cable(s) forward into cabin; secure cables to cabin with duct tape.

5. Connect cable(s) to balancer. Verify security of installation.

18-72 Ground Checks

NOTE

Run-up and shutdown helicopter throughout procedure as required per R66 Pilot's Operating Handbook (POH) Section 4.

NOTE

Use the following balancing procedures in conjunction with approved equipment manufacturer's balancing instructions.

WARNING

Fan shaft and engine shaft balancing equipment must be removed for flight.

1. Prepare helicopter for fan shaft and engine shaft balance per § 18-71.

2. Configure balance equipment per manufacturer's instructions.

3. Ground run helicopter at 100% RPM (2114 fan shaft RPM and 6016 engine shaft RPM). Verify cyclic stick and tail rotor pedals are in neutral position.

4. Determine vibration level per balance equipment manufacturer's instructions. Maximum vibration allowance is 0.2 IPS (inches per second). If reading is over 0.2 IPS:

   a. Fan Shaft: Adjust balance by selecting one or more NAS1149D0463J, NAS1149F0432P, NAS1149F0463P, A214-3, or A141-14 washers as required and install under one nut of intermediate flex plate (tail rotor driveline) fastener.

   b. Engine Shaft: Adjust balance by selecting one or more NAS1149D0463J, NAS1149F0432P, NAS1149F0463P, A214-3, or A141-14 washers as required and install under one nut of aft flex plate (engine driveline) fastener.

   NOTE

   If a large diameter washer is installed at a shaft flange, also install one NAS1149F0432P washer against flange to prevent flange damage (not required for flat flange). Additionally, an NAS6604-5, -6, -7, or -8 bolt may be substituted for a bolt at a flex plate fastener; verify thread engagement meets torque requirements per § 20-30.

5. Adjust as required until reading is 0.2 IPS or less.

CHAPTER 20

STANDARD PRACTICES

Section	Title	Page
20-10	Cleaning	20.1
20-20	Lubrication	20.2
20-30	Torque Requirements	20.3
20-31	Torque Seal	20.5
20-32	Standard Torques	20.6
20-33	Special Torques	20.7
20-34	Push-Pull Tube Rod End Adjustment	20.11A
20-35	D210-series Nuts on Critical Fasteners	20.11B
20-40	Non-Destructive Testing	20.12
20-41	Magnetic Particle Inspection	20.12
20-42	Fluorescent Penetrant Inspection	20.13
20-50	Corrosion Control	20.13
20-60	Priming and Painting	20.13
20-70	Approved Materials	20.16
20-71	Paint Strippers	20.16
20-72	Solvents and Cleaners	20.16
20-73	Fillers and Putty	20.17
20-74	Torque Stripe	20.17
20-75	Primers	20.17
20-76	Powder Coat	20.18
20-77	Paints	20.19
20-78	Lubricants	20.22
20-79	Adhesives and Sealants	20.23
20-80	Storage Limits	20.24
20-90	Miscellaneous Practices	20.25
20-91	Part Interchangeability	20.25
20-92	Thermal Fitting Parts	20.25
20-93	Replacement Component Identification (Data) Plates	20.25
20-94	Crimp Inspection	20.26

Intentionally Blank

CHAPTER 20

STANDARD PRACTICES

20-10 Cleaning

NOTE

Remove turbine exhaust stains from engine cowling, tailcone, empennage, and tail rotor blades after every flight to prevent permanent discoloration.

CAUTION

Wash helicopter exterior surfaces, windshields, and windows with mild soap and water. Harsh abrasives, alkaline soaps, or detergents can scratch painted or plastic surfaces, or cause corrosion of metal. Protect areas where cleaning solution could cause damage.

CAUTION

Never use high-pressure spray to clean helicopter. Never blow compressed air into main or tail rotor blade tip drain holes, pitot tube, or static ports.

WARNING

Refer to appropriate Material Safety Data Sheet (MSDS) and take necessary safety precautions when working in proximity to hazardous materials.

A. Cleaning Exterior Surfaces

1. Rinse away loose dirt and debris from exterior surface with clean water.
2. Apply mild soap and clean warm water solution to exterior surface using a clean, soft cloth, sponge, or soft bristle brush. Use caution near antennas and sensitive equipment.
3. Remove oil and grease using a cloth wetted with aliphatic naphtha.
4. Rinse all surfaces thoroughly.
5. If desired, polish painted surfaces with a good quality automotive wax using soft cleaning cloths, or a chamois cloth, free of abrasive debris.

20-10 Cleaning (continued)

B. Cleaning Windshield and Windows

CAUTION

Do not use gasoline, other alcohols, benzene, carbon tetrachloride, thinner, acetone, or window (glass) cleaning sprays.

1. Rinse away loose dirt and debris from windshield and windows with clean water.
2. Apply mild soap and clean warm water solution, or aircraft plastic cleaner, to windshield and windows using a clean, soft cloth or sponge in a straight back and forth motion. Do not rub harshly.
3. Remove oil and grease using a cloth wetted with isopropyl alcohol (rubbing alcohol) or aliphatic naphtha.
4. After cleaning plastic surfaces, apply a thin coat of hard polishing wax. Rub lightly with a soft cloth. Do not use a circular motion.
5. To remove scratches, rub windshield or windows with jeweler's rouge then hand polish with commercial plastic polish. Polish in figure eight motion.

C. Cleaning Seat Assemblies and Back Rests

1. Vacuum and brush, then wipe with damp cloth. Dry immediately.
2. Soiled upholstery, except leather, may be cleaned with a good upholstery cleaner suitable for the material. Follow manufacturer's instructions. Avoid soaking or harsh rubbing.
3. Leather should be cleaned with saddle soap or a mild hard soap and water.

D. Cleaning Carpet

Remove loose dirt with a whisk broom or vacuum. For soiled spots and stains, use nonflammable dry cleaning liquid.

20-20 Lubrication

WARNING

Refer to appropriate Material Safety Data Sheet (MSDS) and take necessary safety precautions when working in proximity to hazardous materials.

All R66 bearings are sealed or self-lubricating and do not require periodic lubrication.

The engine oil tank, the main and tail rotor gearboxes, and the hydraulic reservoir require servicing when indicated by sight gage level. Additionally, change engine, gearbox, or hydraulic oil and clean respective sight gage when oil becomes so dirty its level cannot be determined. Change hydraulic oil when notedly odorous.

When installing a new or overhauled main rotor gearbox, replace filter at first 100-hour inspection after installation. Thereafter, replace filter at scheduled intervals per Section 5-20. When installing a new or overhauled tail rotor gearbox, drain and flush after first 4 hours of flight or first chip light, whichever occurs first. Thereafter, drain and flush gearbox at scheduled intervals per Section 5-20.

Servicing procedures are located in Chapter 12.

20-30 Torque Requirements

A. Tool Calibration

Dimensions and tolerances given in this manual are critical. Calibrate measuring tools per manufacturers recommendation at least once a year, when tool is dropped, misused, or calibration is suspect. This includes torque wrenches, micrometers, calipers, dial indicators, and spring scales.

WARNING

Proper torque is critical. Always use calibrated wrenches and undamaged, properly lubricated (where applicable) hardware. Ensure clamping surfaces are clean, and clamp only bare metal or wet-primed surfaces. Improper torque or dirty or painted clamping surfaces may result in loss of clamp-up, hardware or part damage, and premature failure.

B. Torque Value

Torque fasteners to standard dry values listed in Section 20-32 unless otherwise specified. If torque is applied by rotating bolt, increase torque value by 10% to account for higher friction at bolthead and shank.

For example, the torque wrench setting for an NAS1305 bolt used with a NAS1068 nutplate is determined as follows:

NAS1305 bolt (5 indicates 5/16 inch size) dry torque per Section 20-32	240 in.-lb
Add 10% because torque must be applied at bolt head	+ 24 in.-lb
Torque wrench setting	264 in.-lb

C. Secondary Locking Mechanism

A secondary locking mechanism is required on all critical fasteners. B330 stamped nuts (palnuts) serve as secondary locking mechanisms in most areas on the helicopter, and are torqued per Section 20-32. The R66 Illustrated Parts Catalog (IPC) lists secondary locking mechanisms for specific fasteners.

D. Critical Fastener

A critical fastener is one which, if removed or lost, would jeopardize safe operation of the helicopter. This includes joints in the primary control system, and non-fail-safe structural joints in the airframe, landing gear, and drive system.

WARNING

Assembly of flight controls is critical and requires inspection by a qualified person. If a second person is not available, RHC recommends the installer take a 5-minute break prior to inspecting flight control connections he has assembled.

Given		Symbols	
Y	= Unknown	Y	= Torque wrench setting
T	= 135 in.-lb	T	= Torque applied to fastener
L	= 10 in.	L	= Length of torque wrench
A	= 1.5 in.	A	= Length of adapter

When using an adapter that lengthens torque wrench effective length, calculate torque wrench setting using the formula below:

EXAMPLE

$$\textbf{Solve for Y} = \frac{T \times L}{L + A} = \frac{135 \times 10}{10 + 1.5} = \frac{1350}{11.5} = 117.39$$

Set torque wrench to 117 in.-lb to torque fastener to 135 in.-lb.

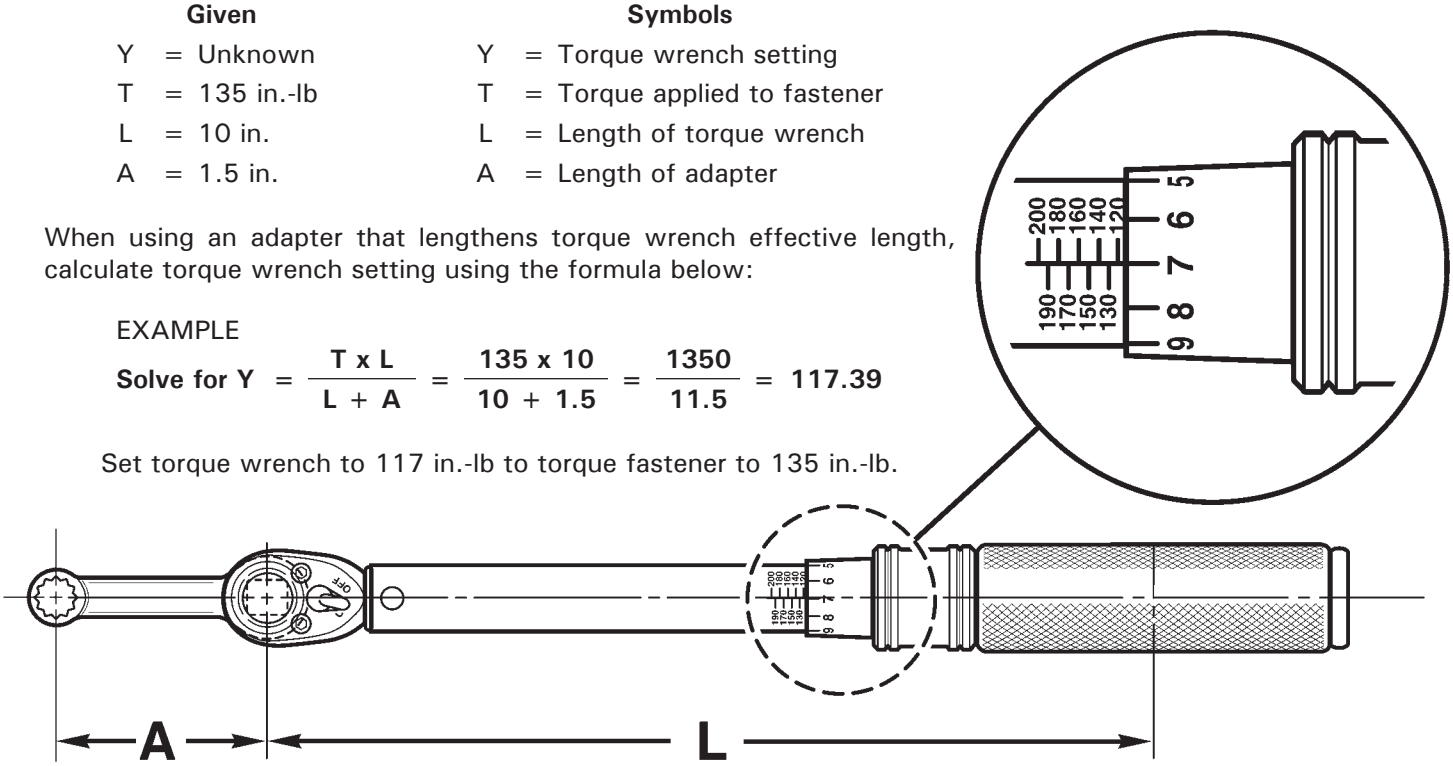

FIGURE 20-1 LENGTHENING TORQUE WRENCH EFFECTIVE LENGTH

Given		Symbols	
Y	= Unknown	Y	= Torque wrench setting
T	= 135 in.-lb	T	= Torque applied to fastener
L	= 10 in.	L	= Length of torque wrench
A	= 1.5 in.	A	= Length of adapter

When using an adapter that shortens the torque wrench effective length, calculate torque wrench setting using the formula below:

EXAMPLE

$$\textbf{Solve for Y} = \frac{T \times L}{L - A} = \frac{135 \times 10}{10 - 1.5} = \frac{1350}{8.5} = 158.82$$

Set torque wrench to 159 in.-lb to torque fastener to 135 in.-lb.

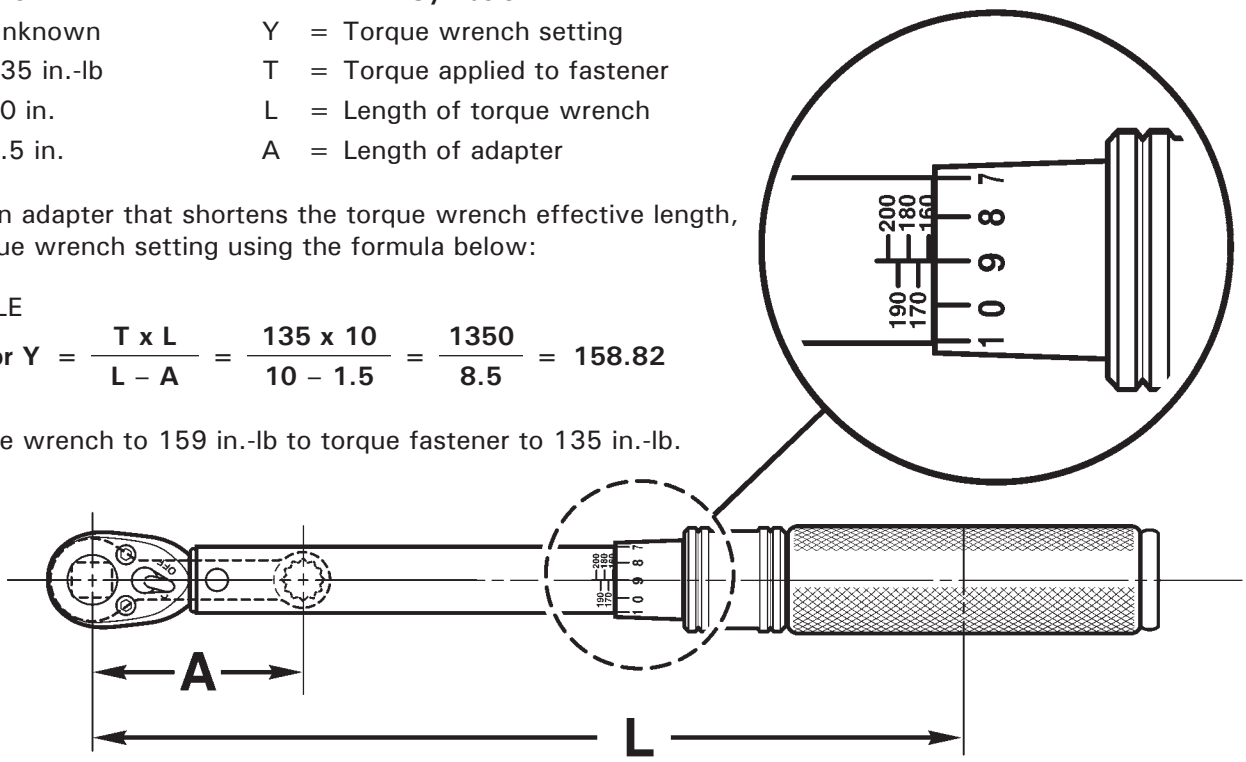

FIGURE 20-2 SHORTENING TORQUE WRENCH EFFECTIVE LENGTH

20-30 Torque Requirements (continued)

WARNING

Two threads minimum must be exposed beyond nut on any installation to insure proper locking of fastener. Four threads maximum may be exposed. More than four threads exposed may allow nut to seat against bolt shank, resulting in insufficient joint clamping.

CAUTION

Never substitute AN bolts for NAS bolts. NAS bolts have higher tensile strength.

E. Torque Requirements

1. Bolt and nut are to be clean and dry except when assembly procedure specifies anti-seize or thread-locking compound.

2. If chattering or jerking occurs, disassemble and re-torque fastener.

3. If special adapters which change effective length of torque wrench are used, final torque value must be calculated using formulas in Figures 20-1 and 20-2.

4. Proper thread engagement requires 2-4 threads beyond primary self-locking nut (palnuts excepted).

5. Torque wrenches must be calibrated annually, when dropped, or when a calibration error is suspected.

Any self-locking nut whose drag has deteriorated appreciably must be replaced. Damaged hardware must be replaced.

20-31 Torque Stripe

WARNING

Refer to appropriate Material Safety Data Sheet (MSDS) and take necessary safety precautions when working in proximity to hazardous materials.

Refer to Figure 5-1. Lacquer-paint Torque Seal® is applied to all critical fasteners after palnut installation in a stripe ("torque stripe") extending from the fastener's exposed threads across both nuts and onto the component. Subsequent rotation of the nut or bolt can be detected visually. Position torque stripes for maximum visibility during preflight inspections. Approved Torque Seal® is listed in § 20-74.

20-32 Standard Torques

FASTENER SERIES	SIZE	EXAMPLE FASTENER	DRY TORQUE (IN.-LB)
NAS 1300 Bolts NAS 6600 Bolts NAS 600 THRU 606 Screws NAS 623 Screws NAS 1351 Screws NAS 1352 Screws	10-32	NAS6603	50
	1/4-28	NAS6604	120
	5/16-24	NAS6605	240
	3/8-24	NAS6606	350
	7/16-20	NAS6607	665
	1/2-20	NAS6608	995
AN3 Bolts AN4 Bolts AN6 Bolts AN8 Bolts AN502 Screws AN503 Screws AN509 Screws AN525 Screws MS24694 Screws MS27039 Screws	10-32	AN3	37
	1/4-28	AN4	90
	3/8-24	AN6	280
	1/2-20	AN8	795
STAMPED NUTS (PALNUTS)	10-32	B330-7 (MS27151-7)	6 to 15
	1/4-28	B330-13 (MS27151-13)	11 to 25
	5/16-24	B330-16 (MS27151-16)	20 to 40
	3/8-24	B330-19 (MS27151-19)	29 to 60
	7/16-20	B330-21 (MS27151-21)	42 to 85
	1/2-20	B330-24 (MS27151-24)	54 to 110
TAPERED PIPE THREADS	1/8-27	N/A	60
	1/4-18	N/A	85
	3/8-18	N/A	110
	1/2-14	N/A	160
	3/4-14	N/A	230
ROD END JAM NUTS (AN315 and AN316)	10-32	AN315-3	15
	1/4-28	AN316-4	40
	5/16-24	AN316-5	80
	3/8-24	AN316-6	110

1. Values include nut self-locking torque.
2. Increase values 10% if torqued at bolt head.
3. For elbow & tee fittings which require alignment, torque to indicated value then tighten to desired position.
4. Values ± 10% unless range is specified.
5. Unless otherwise noted, thread sizes 8-32 & smaller are not used for primary structure & do not require specific torque.

20-33 Special Torques

Special torques supersede standard torques listed in § 20-32.

AREA*	FASTENER*	TORQUE (IN.-LB)*
AIR CONDITIONING (OPTIONAL EQUIPMENT)	(1) D795-8 line assembly, B-nuts	150
	(1) D799-2 switch assembly	90
	(1) D799-3 switch assembly	90
	(1) D799-9 switch assembly	90
	(1) G783 condenser, dessicant cap	100
	(1) G784-1 evaporator assembly, inlet B-nut to TXV	210
	(1) G794-1 hose assembly, B-nuts	210
	(1) G794-2 hose assembly, B-nuts	210
	(1) G794-3 hose assembly, B-nuts	150
	(1) G810-1 line assembly, B-nuts	210
	(1) G811-1 line assembly, B-nuts	150
	(2) AN924-8D nuts	360
	(8) MS27039C1-07 screws at condenser fans	30
	(2) 91292A135 screws	70
CABIN	(1) D210-5 nut, ground handling ball	240
COOLING SYSTEM (ENGINE AND MAIN ROTOR GEARBOX OILS)	(1) B289-2 bolt, drain	70
	(1) B563-2 sight gage	150
	(1) D205-19 hose assembly, B-nuts	285
	(1) D205-20 hose assembly, B-nuts	285
	(1) F723-1 line assembly, B-nuts	675
	(1) F723-2 line assembly, B-nuts	245
	(1) F723-3 line assembly, B-nuts	245
	(1) F723-4 line assembly, B-nuts	245
	(1) F724-1 line assembly, B-nuts	120
	(1) F724-2 line assembly, B-nuts	285
	(1) F724-3 line assembly, B-nuts	285
	(2) AN815-8D unions, on F649-1 oil cooler	300
	(2) AN832-8D unions, at firewall	230-260
	(1) AN832-10D union, at firewall	330-360
	(2) AN924-8D nuts, at firewall	150
	(1) AN924-10D nut, at firewall	180
	(2) AN924-6D nuts, securing F823-1 thermostat assembly to firewall	120
	(2) AS5169D04L fitting, on F649-1 oil cooler	58
	(1) MS28034-1 oil temperature sender, to tank	120

20-33 Special Torques (continued)

AREA*	FASTENER*	TORQUE (IN.-LB)*
DOOR HINGES AND GAS SPRINGS	(16) MS51861-37C screws, securing door hinge assemblies	36
	(2) 94830A030 nuts, securing G904-1 gas spring ball studs at baggage compartment door	100
	(2) 94830A030 nuts, securing D575-1 gas spring ball studs at aft doors	100
	(2) C394-2 ball stud, at forward doors, to frame	150 wet
	(2) D575-2 and (2) D575-3 ball joints, at forward doors' D573-4 rods	37
DRIVE SYSTEM	(2) F650-1 bolt, forward main rotor gearbox and G201 frame mounts	65 FT-LB wet Bolt head or nut
	(2) F650-2 bolt, aft main rotor gearbox and G201 frame mounts	65 FT-LB wet Bolt head or nut
EMPENNAGE	(8) NAS6604-6 bolts, securing vertical stabilizers to upper horizontal stabilizer	185
	(1) NAS1352-3-14P screw, securing guard assembly blocks to lower vertical stabilizer	40
ENGINE CONTROLS	(1) Fuel control unit (FCU) lever nut	40-50
	(1) Power turbine governor (PTG) lever nut	40-60
	(4) MS21042L3 nut, securing control wires	25-30
ENGINE INDUCTION	(1) A457-16 and (1) A457-17 fittings, IBF filter FMA line	60
	(1) G738-1 nozzle, compressor service	30
	(1) AN316-7R nut, compressor service line	150
	(1) AN929-4 cap, compressor service line	60
FUEL SYSTEM	(1) B254-3 strainer, fuel bladder outlet	150
	(1) B283-12 hose assembly, fuel valve to fuel pump inlet, B-nuts	110-130
	(5) B289 bolts, fuel sender	37
	(1) F550 fuel sender center stud nut	11
	(1) F550 fuel sender ground stud nut	9
	(1) D205-21 hose assembly, fuel bladder outlet to fuel valve, B-nuts	110-130
	(1) G254-2 fitting, vent assembly	200
	(1) G254-6 retainer, vent assembly	200
	(1) AN924-5D nut, low fuel warning switch assembly	150
	(1) MS21042L3 nut, securing control wire	27
AUXILIARY FUEL SYSTEM	(5) B289-4 bolts, fuel sender	37
	(1) D205-35 hose assembly, B-nuts	120
	(2) D205-36 hose assembly, B-nuts	120
	(2) G764-5 fittings	200
	(1) AN815-6D fitting	200

20-33 Special Torques (continued)

AREA*	FASTENER*	TORQUE (IN.-LB)*
HEATER	(1) G391-1 line assembly B-nuts (apply A257-9 to upper nut threads)	245 wet
	(1) G391-2 line assembly B-nuts	100
	(1) G391-3 line assembly B-nuts	100
	(1) G391-4 line assembly B-nuts	100
	(1) G391-5 line assembly B-nuts	230-260
	(2) G392-3 diffuser assembly B-nuts	100
	(1) MS21042L3 nut, securing control wire	25-30
HYDRAULIC HOSES & FITTINGS	(2) AN815-3D union	95-105
	(2) AN815-4D union	135-150
	(1) AN820-4 cap, on reservoir AN804D4 T-fitting	60
	(1) AN820-6 cap, on reservoir AN834-6D T-fitting	120
	(2) D452-3 nuts, on aft and left hand servos	60
	(3) D452-4 nuts, on aft and left hand servos and on reservoir	90
	(1) D452-6 nut, on reservoir	150
	(2) B330-19 palnut, on aft and left hand servos	30
	(3) B330-21 palnut, on aft and left servos and on reservoir	45
	(1) B330-25 palnut, on reservoir	75
	(1) D205-14 line assembly B-nuts	95-105
	(1) D205-17 line assembly B-nuts	95-105
	(1) D205-18 line assembly B-nuts	135-150
	(1) D205-22 line assembly B-nuts	95-105
	(1) D205-23 line assembly B-nuts	135-150
	(1) D205-24 line assembly B-nuts	135-150
	(2) F902-1 line assembly B-nuts	135-150
	(2) F902-2 line assembly B-nuts	110-130
HYDRAULIC RESERVOIR	(1) D487-3, filler-vent	100
	(1) D516-1, filter cap	150
	(1) B563-2, sight gage	150
HYDRAULIC SERVOS	(1) D210-08 nut, attaching D200-2 scissors	25
	(1) B330-6 palnut on D200-2 scissor apex fastener	5-10
LANDING GEAR	(4) NAS6604-46 bolts, securing ground handling wheel support weldments to skid tubes	70
	(4) NAS6607P20 bolt, securing landing gear to fuselage supports and shackles	66 FT-LB
	(2) NAS6607P44 bolt, securing shackles to fuselage	66 FT-LB
	(4) B277-28 clamp, securing fairings to struts	15

20-33 Special Torques (continued)

AREA*	FASTENER*	TORQUE (IN.-LB)*
POP-OUT FLOATS (OPTIONAL EQUIPMENT)	(2) D674-2 hose assembly, B-nuts	245
	(4) D674-6 hose assembly, B-nuts	245
	(2) D674-7 hose assembly, B-nuts	120
	(1) D674-9 hose assembly, B-nuts	245
	(2) D674-10 hose assembly, B-nuts	245
POP-OUT FLOATS (OPTIONAL EQUIPMENT; CONT'D)	(2) D674-11 hose assembly, B-nuts	245
	(1) D674-12 hose assembly, B-nuts	245
	(1) D674-13 hose assembly, B-nuts	245
	(2) D770-1 valve assembly	40
	(2) D770-2 valve assembly	40
	(2) D770-3 valve assembly	40
	(2) D770-4 valve assembly	40
	(2) D770-5 valve assembly	40
	(2) D770-6 valve assembly	40
MAIN ROTOR BLADE	(2) B289-2 bolts, per blade, self-sealing	70
	(2) A722-4 screws, per blade, tip balance weight	40 wet
	(2) NAS1351N3-12P screws, per blade, tip cover	40 wet
MAIN ROTOR FLIGHT CONTROLS	(2) MS21042L04 nut, low rotor horn V3-1 switch	4-5
MAIN ROTOR GEARBOX	(1) B254-3 strainer, main rotor gearbox sump	200
	(1) B563-2 sight gage	150
	(1) B566-1 chip detector, main rotor gearbox	150
	(1) D205-25 hose assembly, sump to pump B-nuts	120
	(1) F904-1 pinion plug, securing rotor shaft input yoke to main rotor gearbox	60 FT-LB wet Apply A257-9 to threads
	(1) AN814-8D plug, main rotor gearbox filler plug	150
	(1) MS21245L8 nut, securing engine shaft input yoke to main rotor gearbox	40 FT-LB
	(1) chip detector wire terminal nut	5
MAIN ROTOR HUB	(1) NAS634-105 bolt, teeter hinge and (2) NAS634-105 bolt, coning hinges	New bolt: 0.021-0.022 inch elongation, wet Used bolt: 0.020-0.022 inch elongation, wet, and cotter pin holes must align
MAST TUBE	(1) B277-064 clamp, lower rib to mast tube	50
PITCH LINKS	(2) 21FKF-813 self-locking jam nuts, main rotor pitch links	300

20-33 Special Torques (continued)

AREA*	FASTENER*	TORQUE (IN.-LB)*
POWERPLANT	(1) D745-3 (pressure) switch assembly	65
	(1) F147-1 screw, FCU minimum throttle stop	20
	(1) F170 fitting, engine gearbox	100
	(1) F727-1 line assembly, fuel pump drain	50-65
	(1) F727-2 line assembly, horizontal turbine-firewall shield assembly drain	50-65
	(1) F741-1 line assembly, fuel differential pressure switch	80
	(1) G426-1 (fuel differential pressure) switch assembly	100
	(2) nuts, securing harness wire to MGT thermocouple studs, engine-supplied	20
	(2) nuts, securing harness wires to starter-generator small terminals, starter-generator supplied	20
	(2) nuts, securing harness wires to starter-generator large terminals, starter-generator supplied	180
	(1) nut, securing harness wire to ignition exciter box, engine-supplied	15
	(2) nuts, securing harness and (2) MS21919WCH4 clamps to engine accesory gearbox, engine-supplied	40
	(4) nuts, securing F577-1 bracket assembly, engine-supplied	40
	(2) tee bolts, securing F173-1 struts to engine, engine-supplied	35-40
	(2) AN815-8D unions, engine oil outlet and oil tank vent	250
	(1) AN815-10D union, engine oil inlet	375
	(1) AN919-0D reducer and (1) AN919-2D reducer	100
	(2) NAS6605-3 bolt, securing G200-1 lug to engine (optional)	110
	(6) NAS6605H3 bolts, securing (2) F593-1 support assemblies to engine	110
	(2) NAS6605H4 bolts and (1) NAS6605H2 bolt, securing F593-3 plate to engine	110
	(1) CV26-77 check valve, engine oil outlet (early R66s)	250
SWASHPLATE	(26) NAS1352N08-8 screws, securing spacers, sleeve assembly, shield, and retainers	35 wet
	(2) NAS1352N08-4 screws, securing B769-2 bracket	35
TAIL ROTOR	(1) D210-4 nut, securing C119-2 bumper	120
	(1) NAS6606-53 bolt, teeter hinge	380
TAIL ROTOR FLIGHT CONTROLS	(1) D210-4 nut, outboard of F316-1 bellcrank assembly	90

20-33 Special Torques (continued)

AREA*	FASTENER*	TORQUE (IN.-LB)*
TAIL ROTOR GEARBOX	(1) A610-1 vent assembly	100
	(1) B563-4 sight gage	150
	(1) B566-2 chip detector	100
	(1) D210-5 nut, pitch control housing	240
	(1) AN320-8 nut, input yoke	35-45 FT-LB
	(4) MS20074-04-06 bolts, input cap	60
	(8) MS20074-04-06 bolts, input housing and output cap	100
	(4) NAS1352-5-12P bolts (undrilled), gearbox-to-tailcone attachment	260
TAIL ROTOR GUARD	(1) NAS1352-3-14P screw, securing block assembly to stabilizer	40
WINDOWS	(22) AN526C832R12 screw, thru center brace	16

* 1. Values include nut self-locking torque.
2. Increase values 10% if torqued at bolt head.
3. For elbow & tee fittings which require alignment, torque to indicated value then tighten to desired position.
4. Values ± 10% unless range is specified.
5. Unless otherwise noted, thread sizes 8-32 & smaller are not used for primary structure & do not require specific torque.
6. Unless otherwise specified, refer to applicable maintenance procedure for material required and application when "wet" torque is indicated.

20-34 Push-Pull Tube Rod End Adjustment

NOTE

Refer to § 18-13 to adjust C258 main rotor pitch links.

The following procedure is standard for adjusting push-pull tube rod ends:

1. Loosen palnut and jam nut on rod end shank.
2. Remove hardware securing push-pull tube rod end to attachment point per respective instructions.
3. Screw rod end in or out of push-pull tube as required to obtain proper rigging adjustment.
4. After any rod end adjustment, verify rod end threaded shank blocks passage of 0.020-inch diameter wire thru the witness hole in the push-pull tube per Figure 5-1. When no witness hole is provided, refer to Figure 5-1 for maximum rod end extension.
5. Install fastener securing push-pull tube to attachment point per respective instructions.
6. Refer to Figure 5-2. Position rod ends to allow as much push-pull tube rotation as possible without binding. Standard torque jam nuts & palnuts per § 20-32 & torque stripe per Figure 5-1.

20-35 D210-series Nuts on Critical Fasteners

When performing maintenance that involves disassembly of a critical fastener (joints with a secondary lock), reassemble the fastener using a D210-series nut.

If a fastener is disassembled that has an MS21042L-series or NAS1291-series nut with a B330-series palnut or B332-series lockwasher (secondary lock),

replace MS21042L08 nut or NAS1291-08 nut with D210-08 nut,
replace MS21042L3 nut or NAS1291-3 nut with D210-3 nut,
replace MS21042L4 nut or NAS1291-4 nut with D210-4 nut,
replace MS21042L5 nut or NAS1291-5 nut with D210-5 nut,
replace MS21042L6 nut or NAS1291-6 nut with D210-6 nut,
replace NAS1291-7 nut with D210-7 nut,
replace NAS1291-8 nut with D210-8 nut, or
replace NAS1291-10 nut with D210-10 nut.

20-40 Non-Destructive Testing

WARNING

Refer to appropriate Material Safety Data Sheet (MSDS) and take necessary safety precautions when working in proximity to hazardous materials.

20-41 Magnetic Particle Inspection

Ferromagnetic steel parts must be inspected for structural defects using magnetic particle inspection.

Steel parts covered by this specification shall be inspected per ASTM E 1444 wet process with ultra-violet light. Applicable requirements and limitations of the above standard shall apply. Parts shall be thoroughly demagnetized and cleaned after inspections. Record the size and location of all rejectable indications.

Procedures and equipment used to perform the inspection shall conform to requirements of ASTM E 1444. Whenever possible, parts shall be inspected with both circular and longitudinal magnetization.

A. Inspection Criteria

Parts (except gears) which are inspected by magnetic particle inspection shall be accepted or rejected according to the following criteria:

Acceptable indications:

- Indications smaller than 0.015 inch are not considered ratable.
- Indications caused by sharp changes in cross-section or part geometry.

Rejectable indications:

- Indications interpreted as cracks, seams, laps, shuts, or any flaws which are open to the surface.
- Indications oriented at an angle of more than 15 degrees from the longitudinal axis with length exceeding 0.125 inch.
- Circumferential indications on any shoulder or fillet (changes in diameter).
- Any indications which break over an edge, shoulder, fillet radius, keyway, spline, or an adjacent area of part more than 0.015 inch.
- Indications caused by undercuts at the toe of a weld.
- Indications caused by cracks in the weld or parent metal.
- Indications caused by inclusions in weld material exceeding 0.1 inch in length.

20-42 Fluorescent Penetrant Inspection

This specification provides for surface inspection of parts fabricated from nonmagnetic materials to detect discontinuities open to the surface, such as cracks, cold shuts, laps, porosity and other surface defects.

Applicable requirements and limitations of ASTM E 1417 shall apply. After inspection is complete, solvent clean parts.

The step-by-step procedure and equipment used to perform the inspection shall be accomplished per ASTM E 1417.

A. Inspection Criteria

Parts inspected by fluorescent penetrant method shall be accepted or rejected on basis of acceptance limits specified. If acceptance limits are not specified, rejectable surface defects and any of the following:

- Cracks
- Seams
- Cold shuts or laps
- Surface inclusions
- In castings, aligned discontinuous surface indications other than cracks, cold shuts and inclusions are rejectable if more than 3/8 inch in length.

20-50 Corrosion Control

[Reserved].

20-60 Priming and Painting

This specification outlines preparation and application requirements for primers and topcoat. Primers provide corrosion protection and a final finish or a base for topcoat. Use only approved materials listed in § 20-70.

Do not prime or paint with a topcoat finish the following areas (unless directed):

- Sliding friction joints.
- Stainless steel parts.
- Swivel joints and adjustable rod ends.
- Plastic, rubber, electrical components and wires or similar materials.
- Bolted joints where torque is a specific requirement for clamping action.
- Bearing press fit or close tolerance slip fit joints (except where wet chromate primer is part of the assembly procedure).

20-60 Priming and Painting (continued)

WARNING

Refer to appropriate Material Safety Data Sheet (MSDS) and take necessary safety precautions when working in proximity to hazardous materials.

A. Priming

1. Preparing Aluminum

Unless otherwise specified, chemical conversion coating using Alodine 1201 is the standard treatment before priming aluminum. Follow manufacturers instructions for application of Alodine. However, if bare or clad aluminum is primed without conversion coating, the following procedure must be used:

a. Alkaline clean if immersion is practical, otherwise wipe clean with an approved degreasing agent.

b. Lightly scuff the surface with Scotch Brite pads.

c. Wipe with a tack rag to remove any foreign material or damp wipe with an approved solvent.

d. Air dry. Do not touch parts with bare hands until primed.

2. Preparing Steel

Alkaline clean is the preferred method for cleaning stainless steel. Alternately, stainless steel may be cleaned using an approved solvent.

Steel parts should only be cleaned using an approved solvent; using an alkaline cleaning process on steel may cause a corrosive reaction.

Where immersion is not practical or for extremely greasy or dirty parts, a preclean in a solvent vapor degreaser may be used.

Air or blow dry using filtered, dry, compressed air.

3. Application

Apply primer after mixing per manufacturer's recommendations. Primer coating is not to exceed 0.0005–0.0020 inch thickness per coat. For parts with internal openings, such as tubes, prime the inside as follows:

a. Thin primer to watery consistency using required reducer.

b. Pour in primer, slosh around, then drain immediately.

c. Dry parts at least (6) hours before using.

20-60 Priming and Painting (continued)

A. Priming (continued)

4. Inspection

Inspect for complete coverage and excessive thickness. If primer is excessively thick, strip part and re-prime. Refer to § 20-70 for approved methods.

B. Painting

Prior to liquid topcoat application, ensure surfaces have been cleaned and primed. In general, most parts will be cleaned and primed as detail parts. However, in some cases, such as the gearbox assembly, this is not practical and primer and topcoat are applied on the assembled component.

Previously primed surfaces, or primed surfaces that have completely cured require the following preparation before paint:

1. Lightly sand using 220-grit or finer sandpaper.
2. Lightly scuff with Scotch Brite pads (optional).
3. Wipe with clean cloth and approved solvent.
4. Wipe with tack cloth.
5. Apply topcoat.

20-70 Approved Materials

The following items are available from the noted manufacturer(s) or their distributor(s). Check with appropriate regulatory authority(s) for allowable usage of materials.

WARNING

Refer to appropriate Material Safety Data Sheet (MSDS) and take necessary safety precautions when working in proximity to hazardous materials.

CAUTION

Follow product manufacturer's instructions for handling and storage.

20-71 Paint Strippers

PRODUCT	MANUFACTURER/SUPPLIER	APPLICATION
Cee-Bee Stripper A-292	McGean-Rohco: Cee-Bee Division Downey, CA	Metal parts, except blades and flex plates.
Plastic Media Blasting System	Pauli & Griffin Co. Vacaville, CA	Metal parts except blades and unsupported sheet metal less than 0.040 inch thick.

20-72 Solvents and Cleaners

PRODUCT	MANUFACTURER/SUPPLIER	APPLICATION
QSOL 220	Safety-Kleen Systems, Inc. Plano, TX	General use for cleaning prior to applying primer, topcoat, adhesive, or sealant.
Benzene, 1-Chloro-4 (Trifluoromethyl) PCBTF***	Any	" "
Final Klean 3909S	Du Pont Chemical Los Angeles, CA	" "
EM-Citro*	LPS Laboratories, Inc. Tucker, GA	" "
Acetone***	Any	" "
Lacolene (Aliphatic Hydrocarbon)	Any	Acrylic plastic cleaner only.
Plexus®	B.T.I. Chemical Co. Oak Park, CA	" "
Presolve	LPS Laboratories, Inc. Tucker, GA	Hydraulic components only.
Tetrachloroethylene (Perchloroethylene)	Any	Vapor degreaser.

20-72 Solvents and Cleaners (continued)

PRODUCT	MANUFACTURER/SUPPLIER	APPLICATION
815 GD	Brulin Corporation Indianapolis, IN	Ultrasonic cleaning, general use.**
SF50	L&R Mfg. Co. Kearny, NJ	" "
#112 Ammoniated or #222 Nonammoniated cleaning & rinse solution	L&R Mfg. Co. Kearny, NJ	Ultrasonic cleaning, avionics components only.
Cleanup Wipe E-4365	Sontara Candler, NC	Cleaning and drying.

* May be used on acrylic plastic.
** Mix 5%-20% by volume; titration not required.
*** Acetone and PCBTF may be mixed together at 1:1 ratio.

20-73 Fillers and Putty

PRODUCT	MANUFACTURER/SUPPLIER	APPLICATION
05819 Finishing Putty 31180 Finishing Glaze	3M St. Paul, MN	Minor surface imperfections.
SBF1191	Gearhead Products Indianapolis, IN	" "
FE-351 Cream Hardener	Catalyst Systems Gnadenhutten, OH	" "

20-74 Torque Seal

PRODUCT	MANUFACTURER/SUPPLIER	APPLICATION
F-900 (Any color except red)	Organic Products Co. Irving, TX	Torque seal.

20-75 Primers

PRODUCT	MANUFACTURER/SUPPLIER	APPLICATION
Gray epoxy CA 7422A/B/C or CA 7501A/B	PPG Industries Irvine, CA	Unlimited.
Gray epoxy 4001PS001 with CS4902 curing solution	AkzoNobel Waukegan, IL	Unlimited.
Aviation Primer, Green, A-702 (Aerosol)*	Tempo Products Medina, OH	Limited or touch-up use only.
Green Chromate Epoxy 44-GN-72	PPG Industries Irvine, CA	Use only where specified.
Gray Urethane Primer Filler LE 3404S	Axalta Coating Systems Philadelphia, PA	Scrolls.

* Shelf life is two years.

20-76 Powder Coat

PRODUCT	MANUFACTURER
Interpon 100-AL101QF Gray Zinc Rich Epoxy Powder*	AkzoNobel Santa Fe Springs, CA
81-2158 Vitralon Grey Zinc Rich Epoxy Powder*	Pratt & Lambert Chemical Coatings Buffalo, NY
39/80020 Smooth Matte Black Polyester Topcoat Powder*	Tiger Drylac USA Cucamonga, CA
49/72460 Smooth Glossy Gray RAL 7043 Polyester Topcoat Powder*	Tiger Drylac USA Cucamonga, CA
49/22460 Smooth Glossy Yellow RAL 1028 Polyester Topcoat Powder*	" "
PFWF104S9 White Polyester Topcoat Powder*	Dupont Co. Wilmington, DE

* Shelf life is 12 months from date of manufacture at ambient temperature.

Intentionally Blank

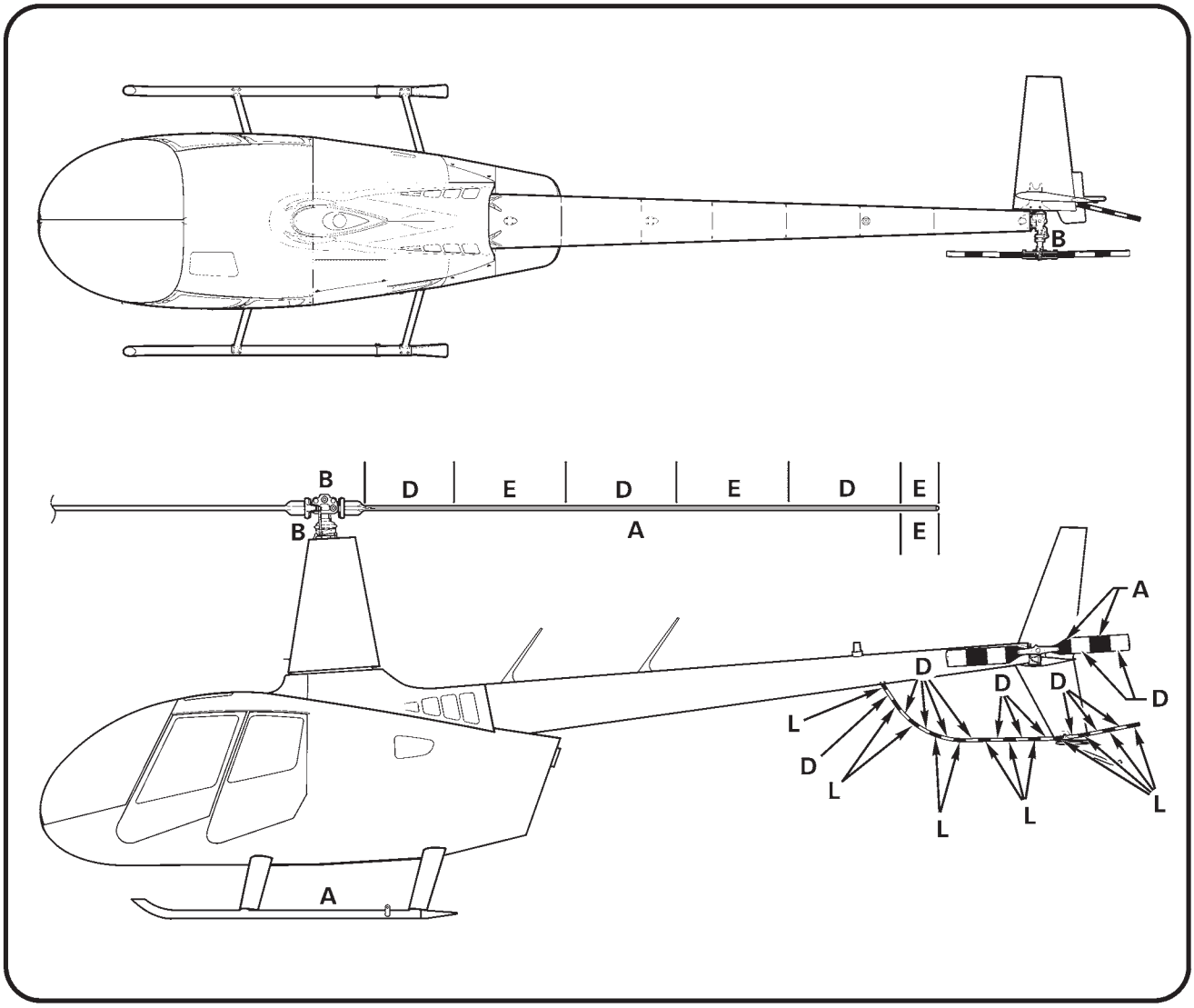

FIGURE 20-3 PAINT CODES

(Refer to Chapter 62 for rotor blade paint dimensions. Exterior surface codes are D & F unless otherwise specified.)

20-77 Paints

Refer to Figures 20-3 & 20-4 for paint code application. Paint codes for specific helicopter serial numbers are listed on the inside cover of Airframe Maintenance Record (logbook).

> NOTE
>
> Use fisheye eliminator, accelerator, or other additives per manufacturer's recommendations.

CODE	MATERIAL	MANUFACTURER
A	Flat Black 18BK006 with 18BK006CAT Catalyst	PPG Aerospace; Irvine, CA
	Flat Black 666-58-7038 with X-503 activator	AkzoNobel; Waukegan, IL
B	Dark gray Imron AF400/AF700	Axalta; Wilmington, DE
	Alumigrip 4200G15290	AkzoNobel; Waukegan, IL
D	White Imron AF400/AF700	Axalta; Wilmington, DE
	Alumigrip 4200G10208	AkzoNobel; Waukegan, IL
E	Yellow Imron AF400/AF700	Axalta; Wilmington, DE
	Alumigrip 4200G40227	AkzoNobel; Waukegan, IL
F	Imron AF400/AF700 Colors	Axalta; Wilmington, DE
G	Clear Imron AF740	" "
H	Flat Clear 666-58-9000 with X-503 activator	AkzoNobel; Waukegan, IL
J	White Imron 2.1 FT flat polyurethane enamel with 9T00-A activator, D-121 & D-101 tints, 2100-P 2.1 binder, & 9T20 flattener	Axalta; Wilmington, DE
K	White Cat-L-Ink 50-100R (shelf life 3 years) 20/A Catalyst (shelf life 2 years)	Ethone, Inc.; West Haven, CT
	Yellow Cat-L-Ink 50-202AR or BR (shelf life 3 years) 20/A Catalyst (shelf life 2 years)	" "
	Med Red Cat-L-Ink 50-508R (shelf life 3 years) 20/A Catalyst (shelf life 2 years)	" "
L	Red Imron AF400/AF700	Axalta; Wilmington, DE
	Alumigrip 4200G4	AkzoNobel; Waukegan, IL
M	Orange Imron AF400/AF700	Axalta; Wilmington, DE
N	Krylon 1311 (shelf life 2 years) Matte Clear (aerosol can)	Krylon Div. of Borden Columbus, OH
O	Light gray Imron AF400/AF700	Axalta; Wilmington, DE
P	Silver Bullet AM Tracer Black 20-452AM-F1 with 16-CURE-F4 activator	Burke Industrial Coatings Ridgefield, WA

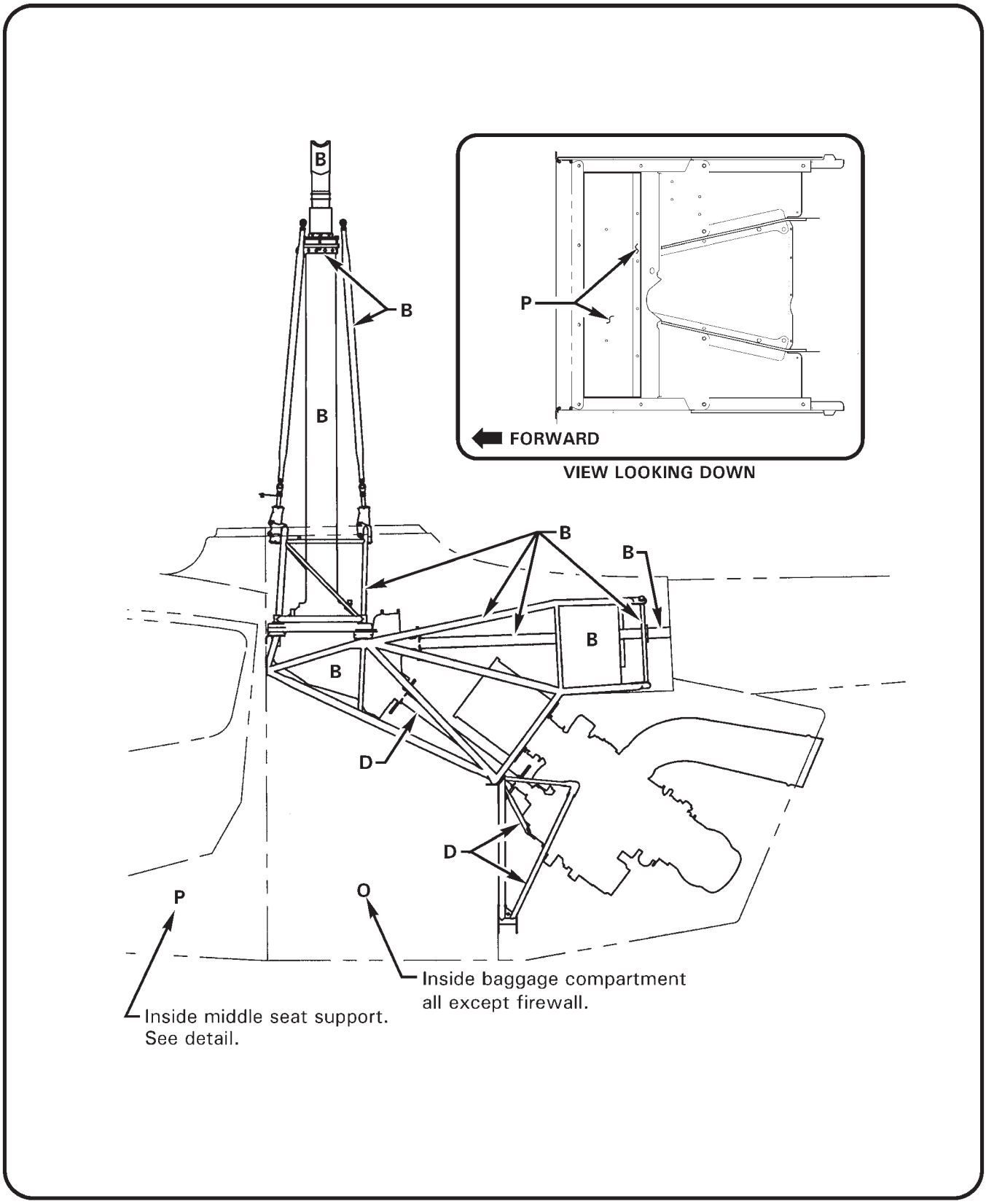

FIGURE 20-4 PAINT CODES

20-77 Paints (continued)

For limited touch-up of interior and landing gear only:

CODE	MATERIAL	MANUFACTURER
A	Cardinal A-2000-05 Flat Black (aerosol can)	Cardinal Industrial Finishes So. El Monte, CA

20-78 Lubricants

RHC PART NO.	LUBRICANT TYPE	MANUFACTURER'S PART NO.	MANUFACTURER
A257-1	Grease (general purpose)	101	Southwestern Petroleum Corp. Fort Worth, TX
A257-3	Grease	Aero Shell 14 MIL-G-25537	Shell Oil Co.
A257-4	Oil (automatic transmission fluid)	Dexron II or Dexron II/Mercon or Dexron III/Mercon	Any
A257-5	Grease (water resistant)	3120 11402	Sta-Lube, Inc. Compton, CA Lubrimatic Buffalo Grove, IL
A257-6	Grease (fuel resistant)	Fuelube EZ Turn	Fleet Supplies Inc. Cleveland, OH United-Erie Div. of Interstate Chemical Co. Erie, PA
A257-7	Dry film lubricant	Lubri-Kote Type A 1040 CR	Mealey Ind. Lubricants Cleveland, OH
A257-8	Rubber lubricant	P-80	International Products Corp. Trenton, NJ
A257-9	Anti-seize	Silver Grade	Loctite Corp. Newington, CT
A257-12	Grease	MobilGrease 28 MIL-PRF-81322	Exxon Mobil Corp., Fairfax, VA
A257-15	Hydraulic fluid	Per MIL-PRF-5606	Any
A257-17	Substitute A257-19		
A257-18	O-ring lubricant	55	Dow Corning Corp. Midland, MI
A257-19	Valve lubricant and sealant compound	111	Dow Corning Corp. Midland, MI
A257-20	Pag oil	3420025-049 (Daphne Hermetic PR) or 3420025-067 (Nissan Type R)	Idemitsu Lubricants America Southfield, MI

20-78 Lubricants (continued)

RHC PART NO.	LUBRICANT TYPE	MANUFACTURER'S PART NO.	MANUFACTURER
A257-21	Petrolatum lubricant	P-16	Panef Corp. Milwaukee, WI
A257-22	Gear oil synthetic	Mobil SHC 629	Exxon Mobil Corp.
A257-23	Turbine oil	Per AS5780 Class HPC	Any

20-79 Adhesives and Sealants

RHC PART NO.	DESCRIPTION	COLOR	MFR. PART NO.	MANUFACTURER
B270-1	Sealant - polysulfide, fuel resistant (2-part)	Gray	FS-8907 B-*	PPG Aerospace Glendale, CA
	Sealant - polysulfide, fuel resistant (2-part)	Gray	WS-8032 B-*	Royal Adhesives & Sealants Wilmington, CA
	Sealant - polysulfide, fuel resistant (2-part)	Gray	AC-350 B-*	Advanced Chemistry & Technology Inc., Garden Grove, CA
B270-2	Substitute B270-1			
B270-4	Substitute B270-13			
B270-5	Sealant - synthetic rubber putty (1-part)	White Light Gray	Q4-2805 94-031	Dow Corning Corp. Midland, MI
B270-6	Sealant & lubricant - thread (1-part)	Gray	Titeseal 55	Radiator Spec. Co. Charlotte, NC
B270-7	Substitute B270-14			
B270-8	Adhesive - rubber, nitrile/acetone (1-part)	Tan	C 160	Stabond Corp. Gardena, CA
B270-9	Adhesive - epoxy, structural, flexible (2-part)	Gray	2216 B/A	3M Co. St. Paul, MN
B270-10	Adhesive/sealant - threadlocker, anaerobic, tight-fits (1-part)	Red	271	Henkel Loctite Corp. Rocky Hill, CT
B270-11	Adhesive/sealant - threadlocker, anaerobic, loose-fits (1-part)	Red	277	Henkel Loctite Corp. Rocky Hill, CT

20-79 Adhesives and Sealants (continued)

RHC PART NO.	DESCRIPTION	COLOR	MFR. PART NO.	MANUFACTURER
B270-12	Sealant - electrical potting (2-part)	Any color except red	MIL-PRF-8516 Type II, Class 2, Category A or B	Any
B270-13	Sealant - silicone rubber, noncorrosive (1-part)	Translucent	3145	Dow Corning Corp. Midland, MI
B270-14	Substitute B270-8			
B270-15	Adhesive - plastic, for vinyl (1-part)	Clear	2262	3M Co. St. Paul, MN
B270-16	Substitute B270-14			
B270-17	Adhesive - cyanoacrylate, instant (1-part)	Clear	Super Bonder 495	Henkel Loctite Corp. Rocky Hill, CT
B270-18	Adhesive - weather strip (1-part)	Black	051135-08008	3M Co. St. Paul, MN
B270-19	Adhesive - epoxy structural, rigid (2-part)	Green	1838 B/A	3M Co. St. Paul, MN
B270-20	Adhesive/sealant - threadlocker, anaerobic, non-permanent (1-part)	Purple	222 or 222MS	Henkel Loctite Corp. Rocky Hill, CT
B270-21	Protectant - corrosion, non-drying (1-part)	Lt. Amber	LPS 3	LPS Laboratories, Inc. Tucker, GA
B270-22	Protectant - corrosion, drying (1-part)	Amber	LPS Hardcoat	LPS Laboratories, Inc. Tucker, GA
B270-23	Sealant - gasket (1-part) Sealant - gasket (1-part)	Brown Brown	GM3H (Gasket Maker #4) JV66B	Perfect Seal, Inc. Cincinnati, OH Dana Corp.; Churubusco, IN (Victor Reinz Brand)
B270-24	Activator/Primer - Anaerobic adhesive (1-part)	Translucent Green	7649	Henkel Loctite Corp. Rocky Hill, CT
B270-25	Clear Coat - automotive touch up, brush in bottle (1-part)	Clear	Clear Coat Touch up Bottle	Automotivetouchup Harahan, LA
B270-26	Sealant - Polysulfide, window glazing (2-Part)	Black	AC-251B-1	Advanced Chemistry & Technology Inc., Garden Grove, CA
B270-27	Adhesive - Epoxy, High Strength Structural, Flexible (2-part)	Translucent Red Blue	EA 9309NA EA 9309.2NA	Henkel Loctite Corp. Rocky Hill, CT
B270-28	Substitute B270-27			

* Dash number for minimum hours application life may be -½, -2, -4, or -12.

20-80 Storage Limits

1. B283 hoses have a shelf storage life of 5 years. Hose service life is “on condition”, with a maximum of 12 years or 2000 hours, whichever occurs first.
2. Elastic cords have a shelf storage life of 5 years. Elastic cord service life is “on condition”, with a maximum of 12 years. Use invoice or FAA Form 8130 date as start date.
3. Store V-belts at less than 85º F (30º C), with relative humidity below 70%. Avoid solvent and oil vapors, atmospheric contaminants, sunlight, and ozone sources (electric motors, arc welding, ionizing air purifiers, etc.). Belt shelf life is 4 years if preceding recommendations are followed. Use invoice date or FAA Form 8130-3 date as start date.
4. Oils and greases have a 5 year shelf life when stored and kept sealed in their original container. Use invoice date or FAA Form 8130-3 date as start date unless the manufacturer has marked container with manufacture date (in which case use manufacture date as start date).
5. Rubber o-rings, seals, and gaskets have a shelf storage life of 20 quarters (5 years). Flourocarbon (Viton), chloroprene, and silicon rubber products shall adhere to manufacturer’s expiration date(s). Service life is “on condition” with a maximum of 12 years. Use cure date on package as start date.
6. Store fuel cell (bladder) at temperatures above 45º F and below 75º F.

20-90 Miscellaneous Practices

20-91 Part Interchangeability

Refer to R66 Illustrated Parts Catalog for part interchangeability information.

20-92 Thermal Fitting Parts

General Procedures for using heat to fit parts during assembly or evaluating parts that may have been overheated in service:

Aluminum parts must not be heated above 200ºF for more than 5 minutes. Higher temperatures or longer times adversely affect strength and corrosion properties. Scrap any aluminum parts suspected of going above 325ºF regardless of time at temperature.

Steel parts (bare) – Maximum temperature 300ºF. Higher temperature can reduce the strength or cause temper brittleness in some alloys.

Steel parts (cadmium plated) – Maximum temperature 300ºF. Higher temperatures will melt the plating and adversely affect steel strength by a process called liquid metal embrittlement.

Bearings and carburized parts such as gears, clutch shafts, and clutch housings should not be heated above 300ºF. Higher temperatures will reduce the surface hardness and increase wear rates.

Always heat parts in an oven with temperature control set no greater than the maximum temperature allowed for the part.

Always attach a pyrometer and thermocouple to the smallest aluminum part in the oven. Never depend on the oven control to determine part temperature.

Cooling a part for thermal fitting at assembly is not recommended. Water vapor from the air will condense on the part and frequently introduce water into the assembly causing severe internal corrosion over time.

20-93 Replacement Component Identification (Data) Plates

In order to issue a replacement component identification plate for field installation, RHC must first receive the old identification plate in legible condition. If old identification plate is lost or destroyed, then RHC must have an original letter (photocopies or faxes are NOT acceptable) from customer's Civil Aviation Authority authorizing identification plate replacement AND stating component name, part number, and serial number for each requested identification plate. There is a charge for each plate issued.

Identification plates may be carefully removed using a sharp plastic scraper. If necessary, use a heat gun to soften plate adhesive. Retain in a dry, contaminate-free area until ready for reinstallation.

Damp wipe local area with acetone or equivalent solvent prior to reinstallation. Residual adhesive on identification plate is usually sufficient for good adhesion. If necessary, use B270-9 adhesive or equivalent to secure.

20-94 Crimp Inspection

Refer to Figure 20-5.

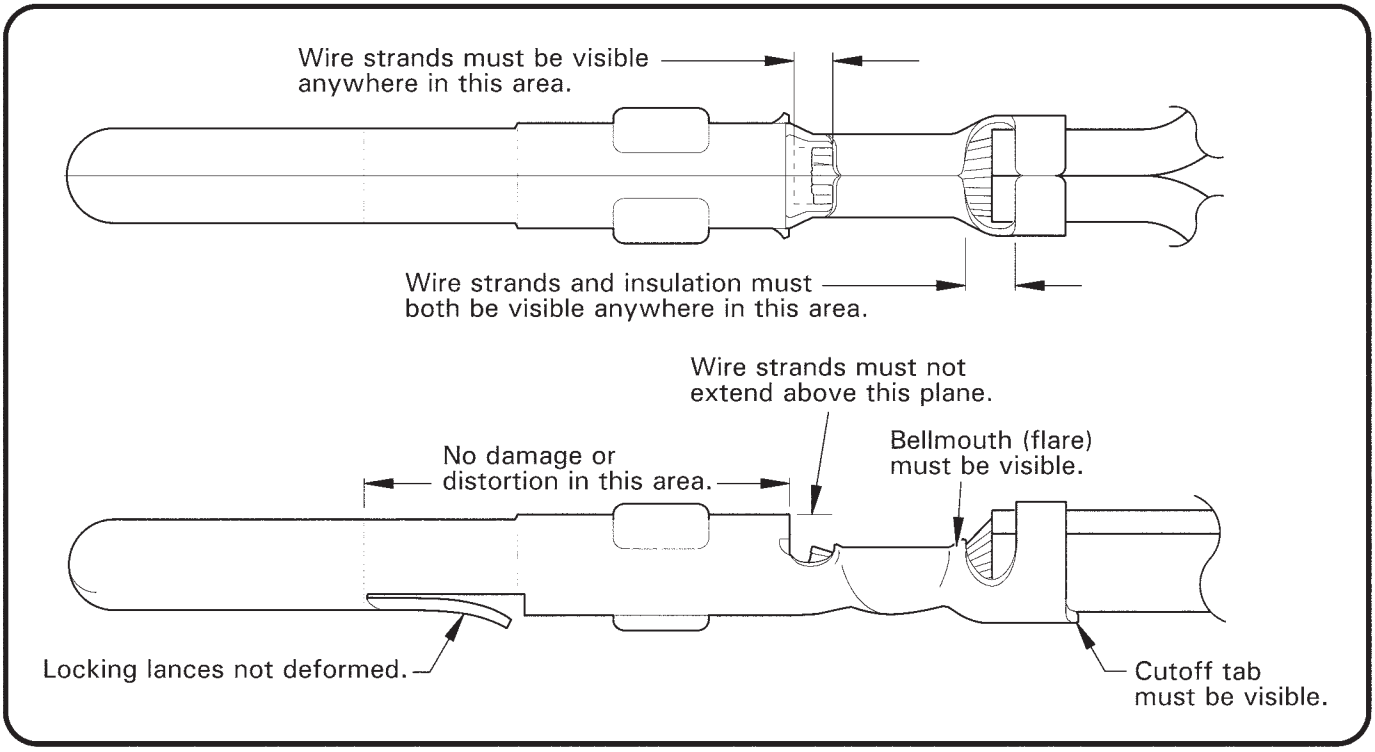

FIGURE 20-5 CRIMP INSPECTION

CHAPTER 21

ENVIRONMENT CONTROL

Section	Title	Page
21-00	Description	21.1
21-10	Ventilation	21.3
	21-11 Nose Vent	21.3
21-20	Air Conditioning	21.5
	21-21 Compressor Assembly	21.5
	21-22 Condenser and Fan Assemblies	21.7
	21-23 Evaporator Assembly	21.8
	21-24 Troubleshooting	21.9
21-30	Cabin Heat	21.11
	21-31 Valve Assembly and Control Rigging	21.11
	21-32 Muffler Assembly	21.12
	21-33 Diffuser and Tee Assemblies	21.12

Intentionally Blank

CHAPTER 21

ENVIRONMENT CONTROL

21-00 Description

Fresh air vents are located in each door and in the nose. Door vents are opened and closed using the knob near the vent door hinge. A rotating knob is provided to seal and lock vents closed. For maximum ventilation, open door vents wide during hover but only one inch or less during cruise. The rotating knob can be used to hold vents partially open.

See Chapter 52 for door vent maintenance instructions.

The fresh air inlet in the nose is opened by pulling the vent handle on the console face. Rotating the vent handle clockwise will lock its position. Air from the nose inlet is directed along the inside surface of the windshield for defogging as well as for ventilation.

The optional cabin air conditioning system, shown schematically in Figure 21-2, is similar to conventional automotive and light aircraft systems. The system consists of a compressor mounted immediately aft of the main gearbox, a condenser mounted to the vertical firewall in the engine compartment, an evaporator mounted to the front of the center seat support, a blower, an overhead outlet duct, and interconnecting lines and hoses. The system uses R134a refrigerant.

The compressor is belt-driven, by a pulley mounted to the main gearbox tail rotor drive yoke assembly, and is equipped with an electromagnetic clutch. When the system is off, the compressor clutch is disengaged, allowing the compressor pulley to freewheel.

Cooling air for the condenser is supplied via an opening in the belly. The engine cowling air scoop collects the necessary cooling air for the condenser during forward flight. In a hover, electric fans help to draw cooling air through the condenser.

The evaporator blower draws warm cabin air though the evaporator inlet grill and evaporator, where the air is cooled. Cool air is drawn through the blower and blown through ducts under the center seat, up the cabin aft wall, and to the overhead duct.

The system is controlled by a toggle switch on the overhead duct which allows selection of off, low, and high fan settings. The compressor requires main rotor gearbox oil pressure to engage. The compressor is automatically engaged by switching the fan on. A temperature (freeze) switch disengages the compressor when evaporator temperature drops below freezing. Safety (pressure) switches disengage the compressor if excessive refrigerant leakage occurs or if refrigerant pressure is excessive. When the collective is lowered to the full-down position another switch disengages the compressor for 10 seconds to ensure that aircraft performance is not affected. All circuits are protected by the 25 amp A/C circuit breaker; the evaporator blower, the condenser fans, and the compressor clutch circuits are further protected by fuses.

Bleed air from the engine compressor is used for cabin heat. Tubing routes hot air from the engine to outlets forward of the tail rotor pedals and in the rear footwells. A heater control knob located to the left of the cyclic stick actuates a valve in the aft end of the control tunnel through a push-pull cable to control cabin heat. Because the cabin heat uses engine compressor air, some performance degradation occurs with heat ON.

CAUTION

In case of engine fire, cabin heat should be turned off.

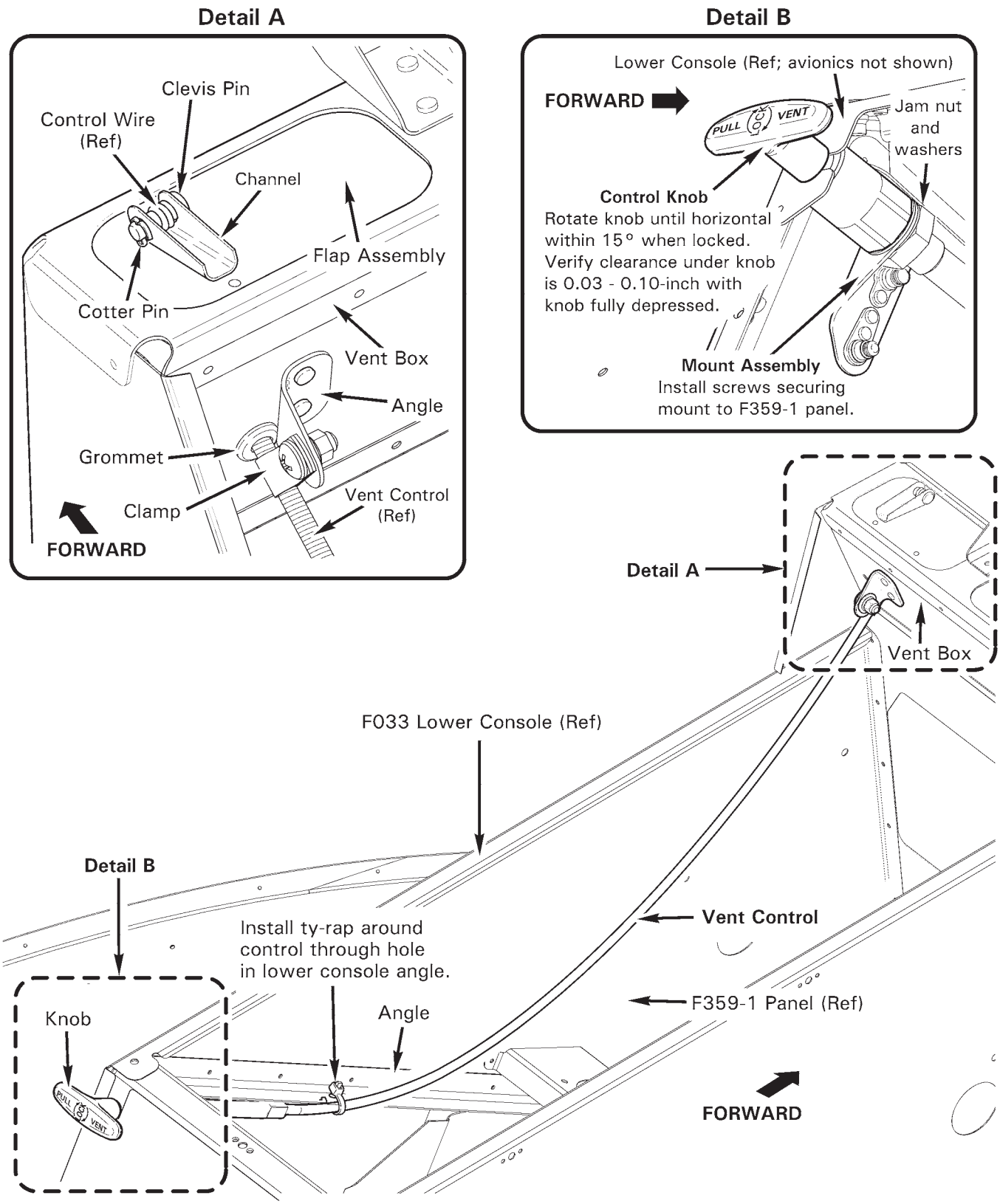

FIGURE 21-1 NOSE VENT

21-10 Ventilation

21-11 Nose Vent

Refer to R66 Illustrated Parts Catalog (IPC) Figures 21-1.

A. Removal

1. Remove hardware securing avionics face to F033-1 lower console and remove face. Unscrew and remove radios. Remove hardware securing radio trays to lower console and remove trays. Disconnect OAT wiring.

2. Refer to Figure 21-1. Remove screws attaching upper console to lower console and hinge console aft. Protect instrument face with foam support or equivalent.

3. Remove and discard cotter pin securing clevis pin and C522-5 (air vent) control inner wire to C062-1 vent box assembly channel. Remove and retain clevis pin.

4. Remove hardware securing AN742-3 clamp and control housing to vent box angle.

5. Cut and discard ty-rap securing control housing to lower console angle.

6. Remove screws securing C365-13 mount assembly to lower console and remove control. As required, remove MS35489-4 grommet and clamp; remove jam nut & lockwashers securing mount assembly to control housing, and remove mount assembly.

B. Installation

1. Refer to Figure 21-1. As required, install C365-12 mount assembly, lockwashers, and jam nut on C522-5 (air vent) control housing, but do not tighten jam nut. Install AN742-3 clamp and (new, as required) MS35489-4 grommet on control housing.

2. Position control in lower console and install screws securing mount assembly to lower console. Verify security.

3. Rotate control knob until horizontal within 15° when locked; tighten jam nut against mount assembly. Verify security.

4. Route control inner wire through C062-1 vent box assembly channel. Adjust grommet position as required, and install clevis pin through channel and control inner wire. Install cotter pin. Verify security.

5. Install clamp and hardware securing clamp and control housing to vent box angle.

6. Install ty-rap around control housing through hole in lower console angle. Cinch ty-rap until snug without over-tightening, and trim tip flush with head.

7. Actuate vent and adjust clamp position as required for proper vent operation. Verify control housing does not slip through clamp when opening and closing vent. Verify clearance under knob is 0.03-0.10 inch with knob fully depressed.

8. Close and secure upper console. Connect OAT wiring. Install radio trays and hardware securing trays to lower console. Verify security. Install and secure radios. Install avionics face and hardware securing face to lower console.

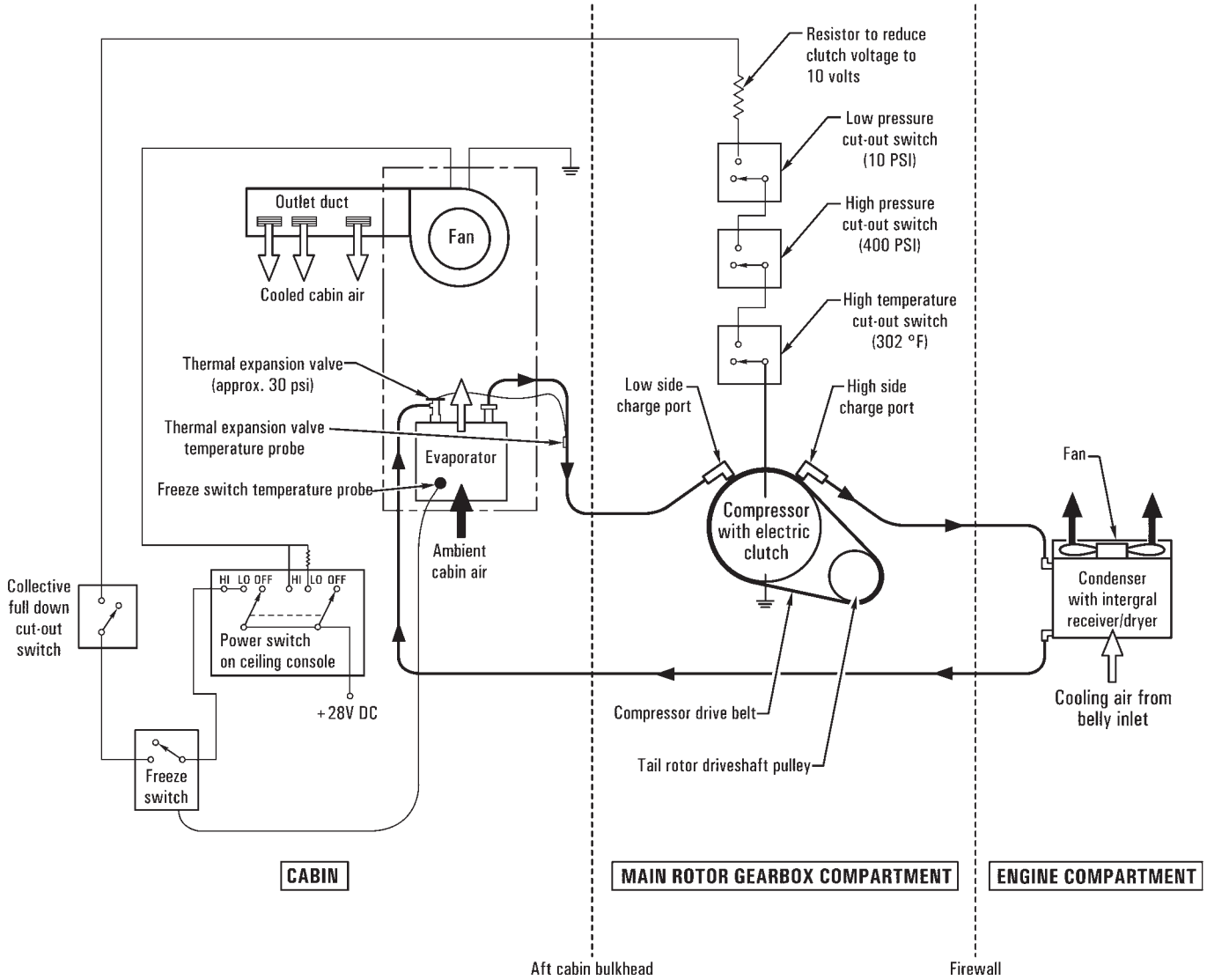

FIGURE 21-2 AIR CONDITIONING SCHEMATIC

21-20 Air Conditioning

21-21 Compressor Assembly

Refer to R66 Illustrated Parts Catalog (IPC) Figure 21-3.

A. Belt Replacement

1. Remove tailcone cowling per § 53-23.
2. Remove hardware securing F196-1 tail rotor drive fan shaft to C947-3 plate assemblies, noting hardware removed.
3. Loosen hardware securing G777-1 compressor assembly to G781-1 arm weldment.

> **CAUTION**
>
> Do not use refrigerant hose assemblies or fittings to rotate compressor. Do not rotate compressor further than necessary, to avoid damaging system wiring and refrigerant hoses or fittings.

4. Rotate compressor down and inboard as required to disengage B173-5 v-belt from pulleys. Route belt around drive shaft flange and remove belt.
5. Route new B173-5 v-belt around drive shaft flange and fit belt onto G779-1 pulley and compressor pulley.
6. Rotate compressor up and outboard to tension belt, then tighten hardware securing compressor to weldment. Adjust belt until 4.5-5.5 lb of force applied mid-span deflects belt 0.16-inch. Standard torque bolts per § 20-32 and torque stripe per Figure 5-1.
7. Install hardware securing drive shaft to plate assemblies, as removed. Standard torque bolts per § 20-32 and torque stripe per Figure 5-1.
8. Install tailcone cowling per § 53-23.

21-21 Compressor Assembly (continued)

B. Removal

1. Remove tailcone cowling per § 53-23.

2. Turn BATTERY switch OFF. Cut and discard ty-raps as required and disconnect compressor assembly wiring from airframe harness at connectors.

3. Recover refrigerant per § 12-81. Remove hardware securing refrigerant hose assemblies to G777-1 compressor assembly. Cap fittings.

4. Remove hardware securing compressor to G781-1 arm weldment and G782-1 mount weldment and remove compressor.

C. Installation

1. Remove G777-1 compressor assembly service port caps and completely drain oil. Using a syringe, service compressor with 120±10 cc A257-20 pag oil into the high pressure port. Install service port caps; verify security.

2. Refer to § 5-45. Inspect B173-5 v-belt condition and replace as required. Fit belt around G779-1 pulley and compressor pulley, and install hardware securing compressor to G782-1 mount weldment. Standard torque bolts per § 20-32.

3. Install hardware securing compressor to G781-1 arm weldment. Rotate compressor up and outboard to tension belt, then tighten hardware securing compressor to weldment. Adjust belt until 4.5-5.5 lb of force applied mid-span deflects belt 0.16-inch. Standard torque bolts per § 20-32, and torque stripe all compressor mounting hardware per Figure 5-1.

4. Remove caps and install refrigerant hose assemblies and hardware securing hoses to compressor. Special torque screws per § 20-33 and torque stripe per Figure 5-1.

5. Connect compressor assembly wiring to airframe harness at connectors and install ty-raps as required. Cinch ty-raps until snug without over-tightening, and trim tips flush with heads.

6. Perform leak detection per § 12-83.

7. Charge system with refrigerant per § 12-82.

8. Install tailcone cowling per § 53-23.

21-22 Condenser and Fan Assemblies

Refer to R66 Illustrated Parts Catalog (IPC) Figure 21-7.

A. Removal

1. Recover refrigerant per Section 12-82.
2. Remove engine cowling per Section 53-21.
3. Turn BATTERY switch OFF. Cut and discard ty-raps as required and disconnect G780-1 fan assembly wiring from airframe harness at connectors.
4. Remove hardware securing G786-1 box assembly to G783-1 condenser.
5. Using backup wrench, disconnect G810-1 and G811-1 line assembly b-nuts from condenser fittings.
6. Supporting condenser, remove hardware securing condenser to G787 support assemblies. Taking care not to damage line assemblies and condenser fittings, carefully remove condenser. Cap fittings.

B. Installation

1. Remove caps. Install hardware securing G783-1 condenser to G787 support assemblies. Verify security.
2. Connect G810-1 and G811-1 line assembly b-nuts to condenser fittings. Using backup wrench, special torque b-nuts per Section 20-33, and torque stripe per Figure 5-1.
3. Install hardware securing G786-1 box assembly to condenser. Verify security.
4. Connect G780-1 fan assembly wiring to airframe harness at connectors and install ty-raps as required. Cinch ty-raps until snug without over-tightening, and trim tips flush with heads.
5. Perform leak detection per Section 12-83.
6. Charge system with refrigerant per Section 12-82.
7. Install engine cowling per Section 53-21.

21-23 Evaporator Assembly

Refer to R66 Illustrated Parts Catalog (IPC) Figure 21-11.

A. Removal

1. Recover refrigerant per Section 12-82.

2. Refer to Section 6-70. Detach F931-1 seat assembly (secured via hook and loop tape) from F474-1 cover assembly and remove seat. Remove hardware securing cover assembly and F380-8 angle to F377-1 middle seat assembly; remove cover and angle.

3. Cut and discard ty-raps as required and disconnect D799-7 (freeze) switch assembly wiring from airframe harness at connector.

4. Remove screws securing G798-1 cover assembly to seat assembly. Remove hardware securing G784-1 evaporator assembly and switch to seat assembly.

5. Using backup wrench, disconnect D795-8 line assembly and evaporator line b-nuts from G794 hose assemblies.

6. Remove aluminum tape securing F380-7 cover to middle seat (if installed). Detach grommet from seat assembly and carefully remove evaporator and attached components forward through seat assembly vertical wall relief. Cap fittings.

B. Installation

1. Remove caps. Position G784-1 evaporator assembly and associated components in F377-1 middle seat assembly. Install screws securing evaporator and D799-7 (freeze) switch assembly to seat assembly. Install screws securing G798-1 cover assembly to seat assembly.

2. Connect D795-8 line assembly and evaporator line b-nuts to G794 hose assemblies. Using backup wrench, special torque hose b-nuts per Section 20-33, and torque stripe per Figure 5-1.

3. Connect freeze switch wiring to airframe harness at connector and install ty-raps as required. Cinch ty-raps until snug without over-tightening, and trim tips flush with heads.

4. Perform leak detection per Section 12-83.

5. Charge system with refrigerant per Section 12-82.

6. Install screws securing F474-1 cover assembly and F380-8 angle to middle seat. Attach F931-1 seat assembly (secured via hook and loop tape) to cover.

21-24 Troubleshooting

1. If air exiting overhead duct is not cold:

POSSIBLE CAUSE	TROUBLESHOOT/CORRECTIVE ACTION
Low Refrigerant Charge/ Refrigerant Leak	Recover refrigerant per Section 12-82. System should operate normally on approximately 2.5 lb refrigerant. If less than 2.5 refrigerant is recovered, perform leak detection per Section 12-83, repair leaks if any, and charge system with refrigerant per Section 12-82.
Switch or Wiring Problem Interrupting Compressor Power	With aircraft not running, turn on Master switch and A/C switch on overhead duct (low or high setting ok). Have observer listen to and observe compressor clutch through cowl door. Clutch should engage (click and snap against pulley) whenever A/C is switched on. Check wiring at freeze switch (refer to Section 21-23), high and low pressure switches (near compressor assembly), and full-down collective switch. Repair any damaged wiring or connectors. Check continuity through each switch. All switches should be closed with a properly charged system and aircraft at rest on ground. Replace any defective switch.
Failed Compressor V-Belt	Inspect belt. Replace belt per Section 21-21 as required.
Insufficient Condenser Airflow	Inspect condenser installation. Verify no blockage and all seals in place. Remove blockage and/or repair seals to ensure airflow through core.
Extreme Environmental Conditions	Extreme temperature and humidity may result in cooling effect less than a typical automobile. No corrective action available.

2. If excessive condensation is found near evaporator assembly:

POSSIBLE CAUSE	TROUBLESHOOT/CORRECTIVE ACTION
Blocked or Kinked Evaporator Drain	Verify system is draining normally. After several minutes ground run in humid conditions with A/C on, water should be seen draining from the drain tube. If water drainage is not observed, inspect drain line (refer to Section 5-45). Correct any damaged or kinked lines. Clean sediment trap as required. Verify proper function of check ball.
Extreme Humidity	Some condensation is unavoidable in extreme humidity. Ensure all fresh air vents closed. Limit opening and closing cabin doors as much as practical to limit humidity entering cabin.

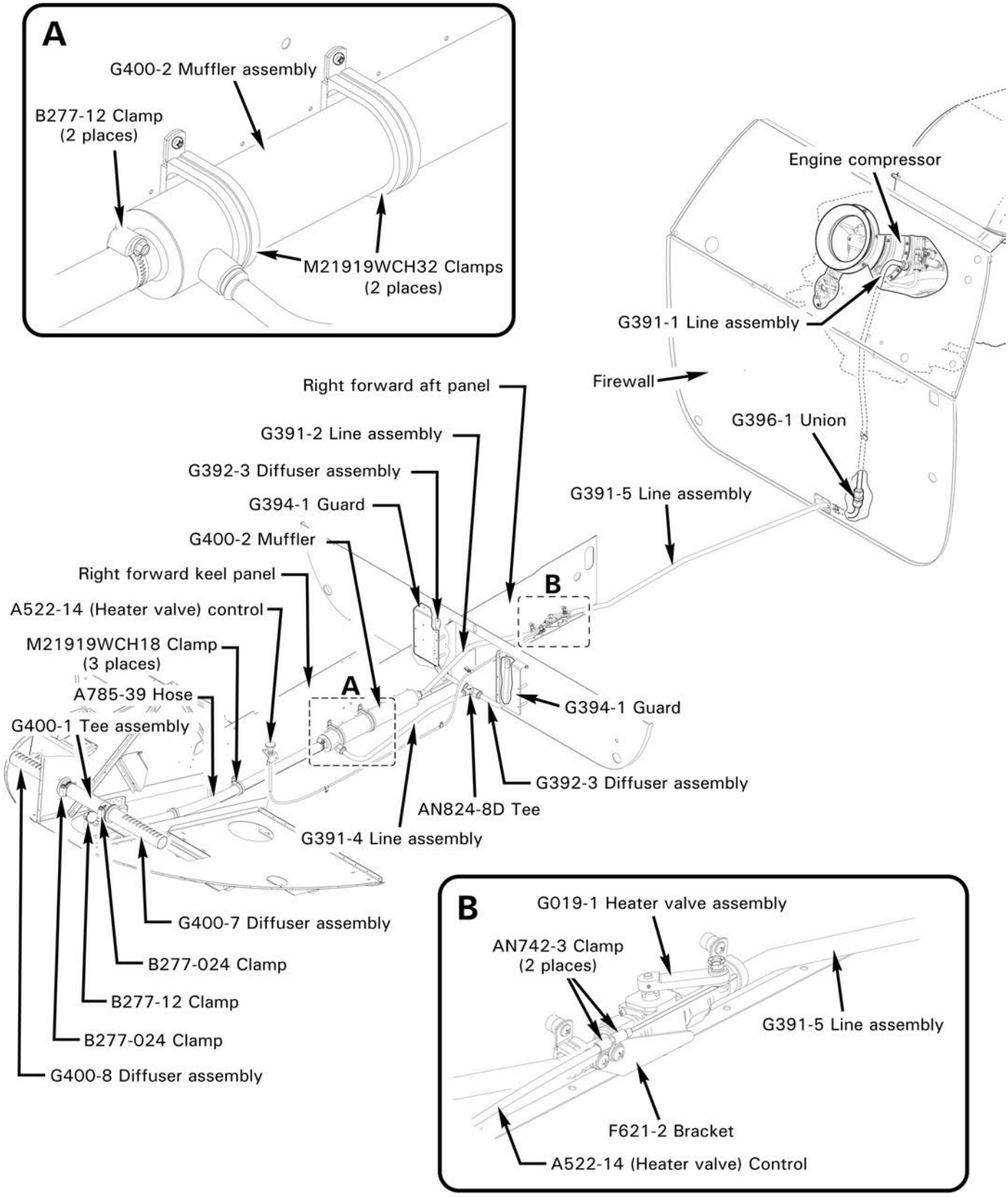

FIGURE 21-3 CABIN HEAT

21-30 Cabin Heat

21-31 Valve Assembly and Control Rigging

Refer to R66 Illustrated Parts Catalog (IPC) Figures 21-31 and 21-35.

A. Removal

1. Refer to Section 6-70. Remove hardware securing F794-1 and F794-2 (belly cover) panels and remove panels. Remove engine cowling per Section 53-21.
2. Refer to Figure 21-3. Remove hardware securing A522-14 (heater valve) control inner wire to G019-1 (heater) valve assembly arm.
3. Remove hardware securing AN742-3 clamps and control housing to F621-2 bracket.
4. Hinge aft right seat forward. Remove clamps, spacers, and hardware securing G391-2 and G391-5 line assemblies to aft right keel panel. Hinge seat back.
5. Loosen line assembly B-nuts from G400-2 muffler assembly & G396-1 union; disconnect lines from valve assembly fittings and remove valve. Plug lines & cap fittings.

B. Installation

1. Refer to Figure 21-3. Remove caps and plugs, install G019-1 (heater) valve assembly and connect G391-2 and G391-5 line assembly B-nuts to valve assembly fittings. Hand-tighten B-nuts at valve assembly, G400-2 muffler assembly, and G396-1 union, but do not torque.
2. Hinge aft right seat forward. Install clamps, spacers, and hardware securing line assemblies to aft right keel panel. Verify security. Hinge seat back.
3. Position valve assembly so F621-2 bracket is vertical within 5°; special torque line assembly B-nuts at valve assembly, muffler assembly, and union, and torque stripe per Figure 5-1.
4. Perform control rigging per Part C, steps 3 thru 6.
5. Install engine cowling per Section 53-21.

C. Control Rigging

1. Refer to Section 6-70. Remove hardware securing F794-1 and F794-2 (belly cover) panels and remove panels.
2. Refer to Figure 21-3. Remove palnut and loosen nut securing A462-4 fitting and A522-14 (heater valve) control inner wire to G019-1 (heater) valve assembly arm.
3. As required, loosen hardware securing AN742-3 clamps and control housing to F621-2 bracket. Position end of control housing flush-0.25 inch at or beyond edge of aft clamp and install fasteners. Verify security.
4. Refer to detail in Figure 76-3. Push heater valve knob ON then pull up slightly to create 0.03-0.10 inch clearance under knob. Position valve assembly arm in full open detent. Verify sufficient inner wire beyond aft edge of fitting and special torque fitting nut per Section 20-33.
5. Install fitting palnut, standard torque per Section 20-32, and torque stripe per Figure 5-1. Trim control wire 0.10-0.30 inch beyond aft edge of fitting.
6. Install (belly cover) panels, and install hardware. Verify security.

21-32 Muffler Assembly

Refer to R66 Illustrated Parts Catalog (IPC) Figure 21-35.

A. Removal

1. Refer to Section 6-70. Remove hardware securing F794-1 and F794-2 (belly cover) panels and remove panels.

2. Refer to Figure 21-3. Loosen B277-12 clamp and pull A785-39 hose off of G400-2 muffler assembly. Install temporary covers on muffler and hose openings.

3. Loosen G391-4 line assembly B-nut at AN824-8D tee; disconnect G391-2 and -4 line assemblies from muffler.

4. Remove hardware securing MS21919WCH32 clamps and muffler to forward right keel panel and remove muffler. Plug & cap fittings. As required, remove clamps from muffler.

B. Installation

1. Refer to Figure 21-3. As required, install MS21919WCH32 clamps on G400-2 muffler assembly. Install hardware securing clamps and muffler to forward right keel panel. Verify security.

2. Remove caps and plugs and connect G341-2 and G341-4 line assembly B-nuts to muffler assembly fittings. Special torque B-nuts at AN824-8D tee and muffler assembly, and torque stripe per Figure 5-1.

3. Remove temporary covers and slide B277-12 clamp and A785-39 hose onto muffler assembly and tighten clamp. Verify security.

4. Install (belly cover) panels, and install hardware. Verify security.

21-33 Diffuser and Tee Assemblies

Refer to R66 Illustrated Parts Catalog (IPC) Figure 21-33.

A. Forward Diffuser and Tee Assembly Removal

1. Refer to Figure 21-3. Remove screws attaching upper console to lower console and hinge console aft. Protect instrument face with foam support or equivalent.

2. Loosen two B277-24 clamps securing G400-1 tee assembly collars to G400-7 and G400-8 diffuser assemblies. Slide diffusers outboard from tee and lower console assembly.

3. Loosen B277-12 clamp securing A785-39 hose to tee assembly can weldment and pull hose and clamp off of can.

4. Remove hardware securing MS21919WCH16 clamp and tee assembly to angle and remove tee. As required, remove clamps from tee.

21-33 Diffuser and Tee Assemblies (continued)

B. Forward Diffuser and Tee Assembly Installation

1. Refer to Figure 21-3. As required, install MS21919WCH16 and (two) B277-24 clamps on G400-1 tee assembly. Install tee with clamps, and install hardware securing MS21919WCH16 clamp and tee to angle.

2. Insert G400-7 and G400-8 diffuser assemblies through lower console and into tee assembly. Orient diffuser holes vertically within 5°, and tighten clamps (against spacers) securing tee assembly collars to diffusers. Verify security.

3. Slide A785-39 hose and B277-12 clamp onto tee assembly can weldment and tighten clamp. Verify security.

4. Close and secure upper console.

C. Aft Diffuser Assemblies and Tee Removal

1. Refer to Section 6-70. Remove hardware securing F794-1 (belly cover) forward panel and remove panel.

2. Refer to Figure 21-3. Hinge aft right and left seats forward. Remove hardware securing G394-1 guards and G392-3 diffuser assemblies to aft seat assemblies and remove guards. Hinge seats back.

3. Disconnect diffuser assembly B-nuts from AN824-8D tee and remove diffusers. As required, disconnect G391-4 line assembly B-nut from tee and remove tee. Cap fittings.

D. Aft Diffuser Assemblies and Tee Installation

1. Refer to Figure 21-3. As required, remove caps, install AN824-8D tee, and connect G391-4 line assembly B-nut, but do not torque.

2. Remove caps and install G392-3 diffuser assemblies; connect diffuser assembly B-nuts to tee, but do not torque. Hinge aft right and left seats forward and install hardware securing diffusers to aft seat assemblies. Special torque line assembly and diffuser B-nuts per Section 20-33, and torque stripe per Figure 5-1.

3. Install G394-1 guards and hardware securing guards to aft seat assemblies. Verify security. Hinge seats back.

4. Install (belly cover) panel, and install hardware. Verify security.

Intentionally Blank

CHAPTER 22

AUTOPILOT

Section	Title	Page
22-00	Description	22.1
22-10	(Pitch) Servo Assembly	22.3
22-20	(Roll) Servo Assembly	22.4
22-30	Flight Control Computer	22.5
22-40	Control Panel	22.6
22-50	Cyclic Grip Assembly	22.7
22-60	Maintenance	22.8
22-61	Scheduled Maintenance and Inspections	22.8
22-62	Special Maintenance and Inspections	22.10

Intentionally Blank

CHAPTER 22

AUTOPILOT

22-00 Description

The optional, factory-installed autopilot system consists of two electric servo assemblies, a flight control computer, a control panel, and control buttons on the pilot's cyclic grip.

The autopilot system also utilizes the Attitude Heading Reference System (AHRS; refer to § 97-13).

Two electric servo assemblies attach via push-pull tubes to the bottom of the cyclic stick. One servo controls pitch and is installed in the control tunnel forward of the cyclic stick. The other servo controls roll and is installed under the pilot's seat. Electromagnetic clutches engage or disengage servo inputs from the cyclic control system when selected by the pilot.

The flight control computer is located on a forward panel under the pilot's seat. The control panel is located below the GPS in the instrument console.

The primary autopilot mode is Stability Augmentation System (SAS) mode. In SAS mode the autopilot senses aircraft attitude from the flight control computer and the AHRS. The computer controls servo inputs to the cyclic to maintain attitude.

Additional modes, which may be used simultaneously when in SAS mode, are described in the Normal Procedures section of the R66 Pilot's Operating Handbook (POH) Autopilot Supplement.

The control panel has a row of buttons to control autopilot modes and annunciators to indicate mode status. A dark annunciator indicates that a mode is off, a white annunciator indicates that a mode is armed or on standby, and a green annunciator indicates that a mode is active. The annunciators flash alternating white and green during start up.

The cyclic grip-mounted buttons are the TRIM and AP OFF buttons. The TRIM button is used to reset the trim attitude. The autopilot tries to maintain the attitude at which the button is released. In addition, holding the TRIM button for more than 1.25 seconds engages the system from standby mode. The AP OFF button allows disengagement with hands on controls.

Safety monitors automatically disengage individual modes or the entire system if a malfunction is detected. Audio warnings consisting of beeps in the headset accompany the safety monitors and are described in the Normal Procedures section of the POH Autopilot Supplement.

The autopilot is protected by a dedicated circuit breaker on the avionics bus (autopilot is not powered with the avionics master switch off).

A. Schematic

Refer to MM Figure 98-8 for autopilot installation electrical schematic.

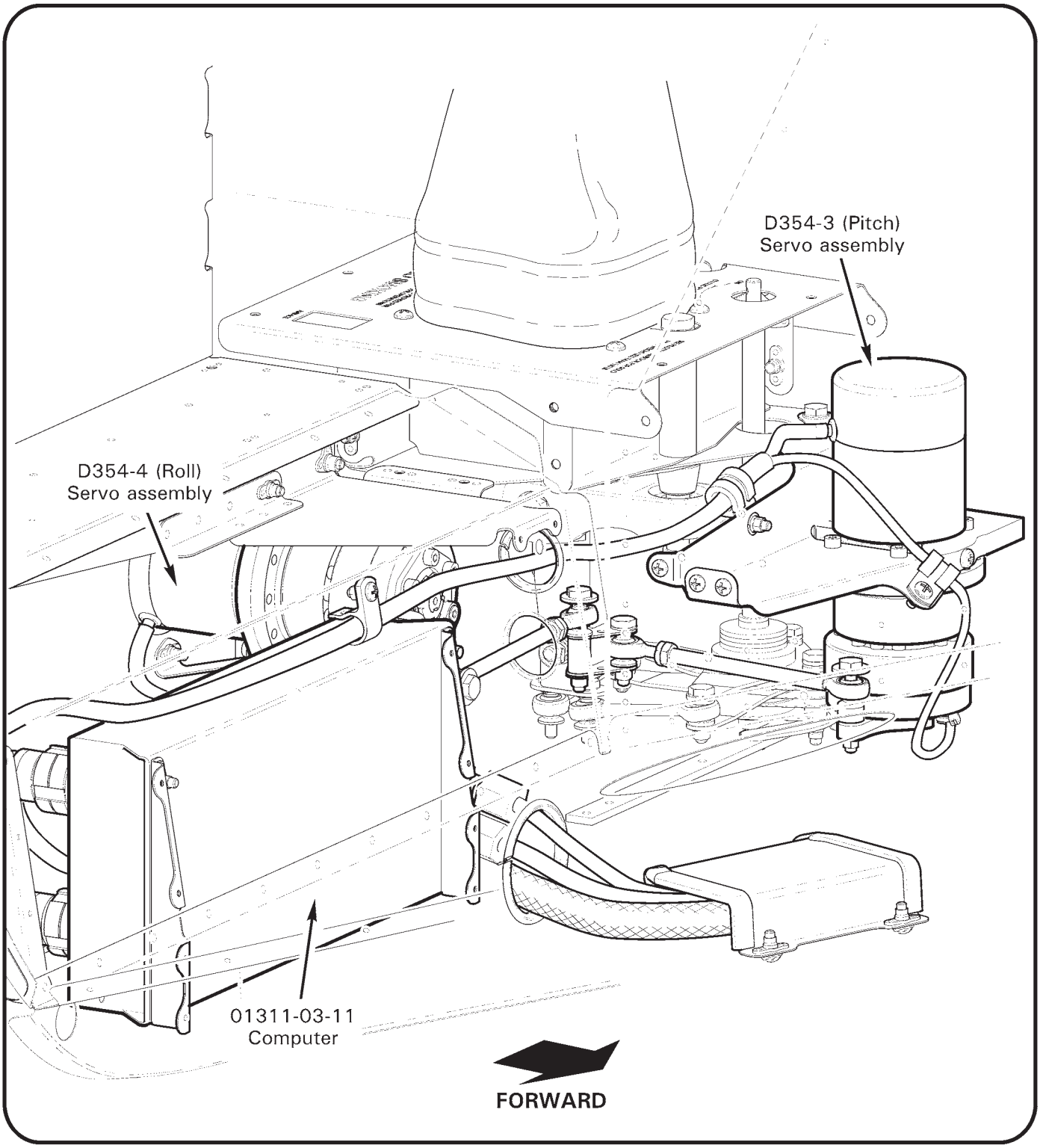

FIGURE 22-1 AUTOPILOT SYSTEM

22-10 (Pitch) Servo Assembly

A. Removal

1. Turn battery & avionics switches off and pull out AUTOPILOT (5 amp) circuit breaker at panel.
2. Remove F680-3 and F445-1 collective covers and F444-1 cyclic cover. Hinge front right seat forward. Remove G702-7 cover assembly under pilot's seat.
3. Remove avionics and avionics trays as required from lower console.

> **CAUTION**
>
> Do not change the length of A336-8 push-pull tube and A127-3 rod ends center-to-center dimension (4.27–4.33 inches).

4. Position cyclic stick full aft and apply cyclic friction. Remove hardware (and C130-50 spacer) securing D354-3 (pitch) servo assembly arm to A336-8 push-pull tube's rod end.
5. Disconnect servo harness from 01311-03-11 flight control computer's J1 PITCH receptacle. Cut and discard ty-rap securing harness to M23190/1-2 clamp and pull harness through access holes into control tunnel.
6. Support servo and remove hardware securing servo's D353-4 brace to cyclic box and keel panels. Carefully remove servo from control tunnel.

B. Installation

1. Turn battery & avionics switches off and pull out AUTOPILOT (5 amp) circuit breaker at panel. Position cyclic stick full aft and apply cyclic friction.
2. Position D354-3 (pitch) servo assembly in control tunnel and install hardware securing servo's D353-4 brace to cyclic box. Standard torque bolts per § 20-32 and torque stripe per Figure 5-1. Install screws securing brace to keel panels. Verify security.
3. Route servo harness through access holes and connect harness to 01311-03-11 flight control computer's J1 PITCH receptacle. Install ty-rap securing harness to M23190/1-2 clamp. Cinch ty-rap until snug without over-tightening, and trim tip flush with head. Verify harness security.
4. Install hardware (and C130-50 spacer) securing servo arm to A336-8 push-pull tube's rod end. Standard torque bolt per § 20-32 and torque stripe per Figure 5-1. Verify security.
5. Verify length of A336-8 push-pull tube and A127-3 rod ends center-to-center dimension is 4.27–4.33 inches.
6. Verify freedom of flight controls through full travel with and without friction applied.
7. Install avionics trays and avionics if removed. Verify security.
8. Push in AUTOPILOT circuit breaker (5 amp) at panel. Perform ground checks as appropriate per § 22-61.
9. Install G702-7 cover assembly under pilot's seat. Install F444-1 cyclic cover, and F445-1 and F680-3 collective covers. Verify security.

22-20 (Roll) Servo Assembly

A. Removal

1. Turn battery & avionics switches off and pull out AUTOPILOT (5 amp) circuit breaker at panel.
2. Remove F680-3 and F445-1 collective covers. Remove G702-7 cover assembly under pilot's seat.

> **CAUTION**
>
> Do not change the length of A336-8 push-pull tube and A127-3 rod ends center-to-center dimension (4.17–4.23 inches).

3. Position cyclic stick full left and apply cyclic friction. Remove hardware securing D354-4 (roll) servo assembly arm to A336-8 push-pull tube's rod end.
4. Disconnect servo harness from 01311-03-11 flight control computer's J3 ROLL receptacle. Cut and discard ty-raps securing servo harness to autopilot harnesses.
5. Support servo and remove hardware securing servo's D352-14 block assembly to keel panel and D353-5 brace assembly. Carefully remove servo from under pilot's seat.

B. Installation

1. Turn battery & avionics switches off and pull out AUTOPILOT (5 amp) circuit breaker at panel. Position cyclic stick full left and apply cyclic friction.
2. Position D354-4 (roll) servo assembly under pilot's seat and install hardware securing servo's D352-14 block assembly to keel panel and D353-5 brace assembly. Tighten screws. Verify security.
3. Connect servo harness to 01311-03-11 flight control computer's J3 ROLL receptacle. Install ty-raps securing servo harness to autopilot harnesses as required. Cinch ty-raps until snug without over-tightening, and trim tips flush with heads. Verify harness security.
4. Install hardware securing servo arm to A336-8 push-pull tube's rod end. Standard torque bolt per § 20-32 and torque stripe per Figure 5-1. Verify security.
5. Verify length of A336-8 push-pull tube and A127-3 rod ends center-to-center dimension is 4.17–4.23 inches.
6. Verify freedom of flight controls through full travel with and without friction applied.
7. Push in AUTOPILOT circuit breaker (5 amp) at panel. Perform ground checks as appropriate per § 22-61.
8. Install G702-7 cover assembly under pilot's seat. Install F445-1 and F680-3 collective covers. Verify security.

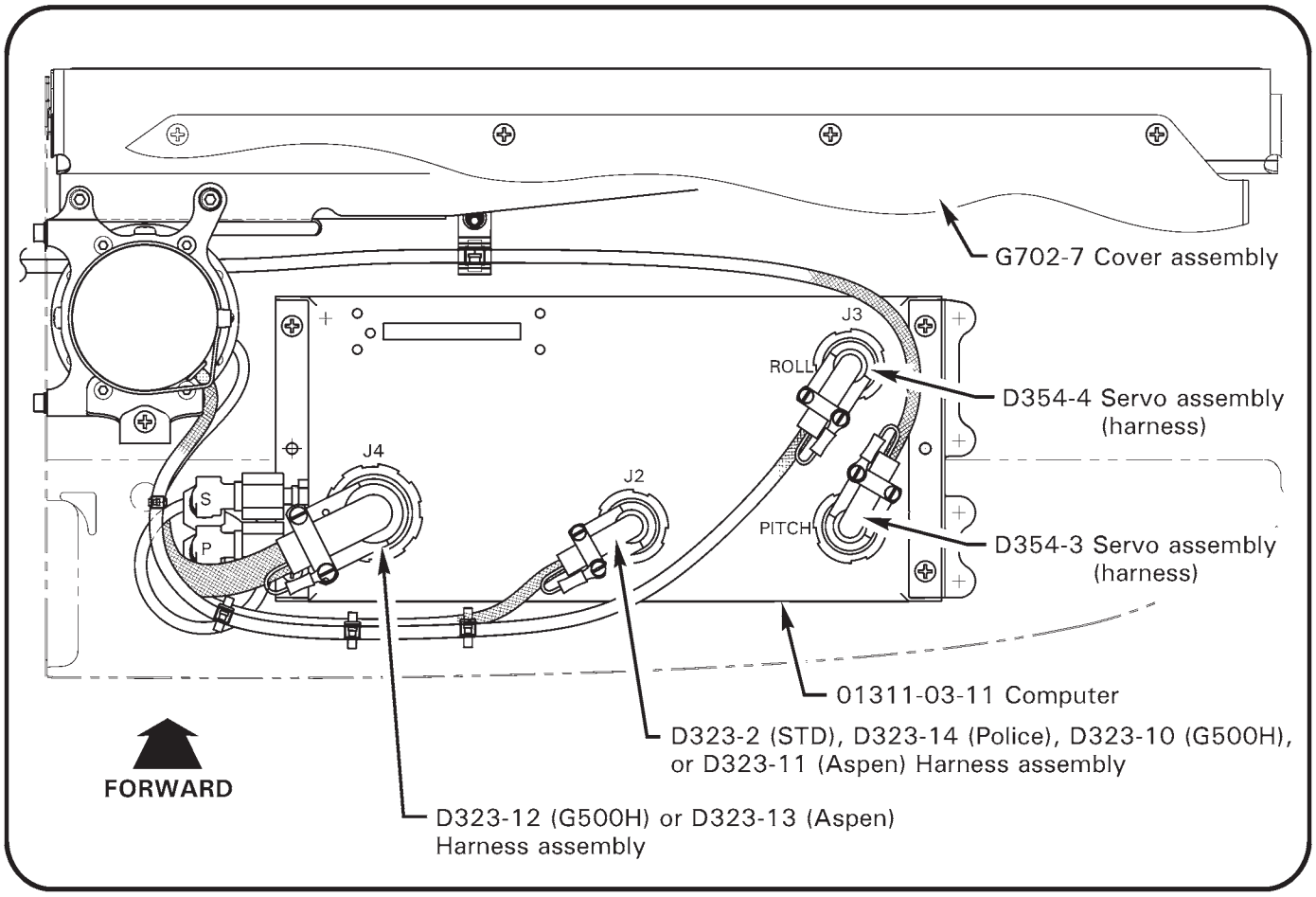

FIGURE 22-2 FLIGHT CONTROL COMPUTER

22-30 Flight Control Computer

A. Removal

1. Turn battery & avionics switches off and pull out AUTOPILOT (5 amp) circuit breaker at panel.
2. Remove G702-7 cover assembly under pilot's seat.
3. Disconnect D323 harness assemblies and D354 servo assembly harnesses from 01311-03-11 flight control computer's J1 PITCH, J2, J3 ROLL, and J4 receptacles.
4. Disconnect pitot and static tubes from computer. Plug elbows and tubes.
5. Support computer and remove screws securing computer to D358-1 support assemblies. Carefully remove computer from under pilot's seat.

22-30 Flight Control Computer (continued)

B. Installation

1. Turn battery & avionics switches off and pull out AUTOPILOT (5 amp) circuit breaker at panel.
2. Position 01311-03-11 flight control computer under pilot's seat and install screws securing computer to D358-1 support assemblies. Tighten screws. Verify security.
3. Remove plugs and connect pitot and static tubes to computer. Perform pitot and static system leak checks per § 95-10.
4. Connect D323 harness assemblies and D354 servo assembly harnesses to computer's J1 PITCH, J2, J3 ROLL, and J4 receptacles. Install ty-raps securing harnesses as required. Cinch ty-raps until snug without over-tightening, and trim tips flush with heads. Verify harness security.
5. Verify freedom of flight controls through full travel with and without friction applied.
6. Push in AUTOPILOT circuit breaker (5 amp) at panel. Perform ground checks as appropriate per § 22-61.
7. Install G702-7 cover assembly under pilot's seat.

22-40 Control Panel

A. Removal

1. Turn battery & avionics switches off and pull out AUTOPILOT (5 amp) circuit breaker at panel.
2. Loosen radio keys securing 01309-01-01 control panel from avionics tray.
3. Carefully unplug/remove control panel from tray.

B. Installation

1. Turn battery & avionics switches off and pull out AUTOPILOT (5 amp) circuit breaker at panel.
2. Carefully plug-in/install 01309-01-01 control panel in avionics tray.
3. Tighten radio keys securing control panel to tray. Verify security.
4. Push in AUTOPILOT circuit breaker (5 amp) at panel. Perform ground checks as appropriate per § 22-61.

22-50 Cyclic Grip Assembly

Refer to R66 Illustrated Parts Catalog (IPC) Figures 22-1 & 67-11.

A. Grip Angle Adjustment

1. Loosen cap screws securing pilot's cyclic grip, block assembly, and bar to grip weldment.

2. Rotate grip about weldment to desired angle. Special torque cap screws to 40 in.-lb.

B. Removal and Installation

Refer to § 67-12 for cyclic grip assembly removal and installation procedures.

To access grip switches:

1. Remove MS24693-S1 screws securing C214-27 plate to D379-1 grip. Remove switch nuts and lockwashers to free switches from plate.

2. Install switch lockwashers (new) and nuts and tighten switches to plate; verify switch security. Install screws securing plate to grip.

3. Turn battery switch on and perform ground checks as appropriate per § 22-61.

C. Schematic

Refer to MM Figure 98-1 for F024 electrical system schematic.

22-60 Maintenance

22-61 Scheduled Maintenance and Inspections

A. Ground Checks

> NOTE
>
> Perform the following ground checks after component replacement or other repairs have been performed on the autopilot system. Perform ground checks after an accident or incident that may have affected autopilot or related equipment prior to return to service.

> NOTE
>
> Refer to § 22-62 for troubleshooting if any of the following ground checks cannot be verified.

1. Turn battery & avionics switches on. Verify four beeps in headset and control panel LEDS alternate white/green:

FOUR BEEPS IN HEADSET

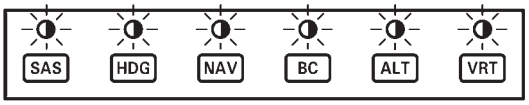

LEDs ALTERNATE WHITE/GREEN

2. Verify SAS enters standby mode approximately 6 seconds after attitude indicator caging flag exits window (pull and release caging knob if instrument bank angle exceeds 6 degrees). Verify no sound in headset and control panel SAS LED is white, other LEDs are dark:

NO SOUND

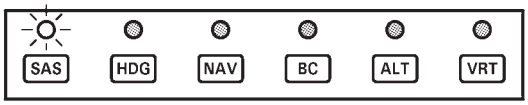

SAS LED IS WHITE, OTHER LEDs DARK

3. Visually verify servo assembly arms do not move when moving cyclic.

4. Engage SAS mode (cyclic should feel "energized). Verify no sound in headset and control panel SAS LED is green, other LEDs are dark:

NO SOUND

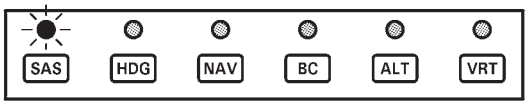

SAS LED IS GREEN, OTHER LEDS DARK

5. Install & activate hydraulic test pump (to simulate hydraulics-on operation) per § 12-34.

   a. With SAS engaged, displace cyclic at least 1 inch from neutral position and verify SAS returns cyclic to neutral within ± 0.25 inch. Perform check for roll & pitch axes.

   b. With SAS engaged, displace cyclic full deflection, and verify 2.5–3.5 lb force when displaced more than 1 inch from neutral position. Perform check for roll & pitch axes.

22-61 Scheduled Maintenance and Inspections (continued)

A. Ground Checks (continued)

6. Refer to step 2. Engage SAS and verify SAS disengages when control panel's SAS button is depressed or when AP OFF button on the cyclic grip is depressed. Verify four beeps in headset and control panel SAS LED is white, other LEDs are dark:

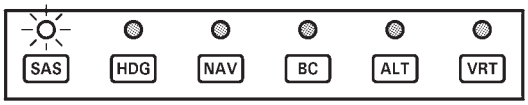

SAS LED IS WHITE, OTHER LEDS DARK

7. Pressurize pitot system per § 95-10. Engage SAS and ALT modes. Verify no sound in headset and SAS & ALT LEDs are green, other LEDs are dark:

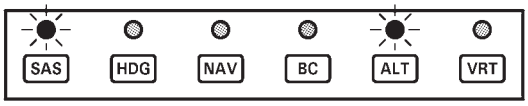

SAS & ALT LEDs ARE GREEN, OTHER LEDS DARK

8. Disengage ALT mode. Verify no sound in headset and SAS LED is green, other LEDs are dark:

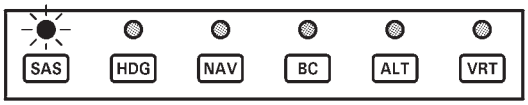

SAS LED IS GREEN, OTHER LEDS DARK

9. Refer to steps 7 & 8. Engage SAS and HDG modes. Verify no sound in headset and SAS & HDG LEDs are green, other LEDs are dark. Disengage HDG mode. Verify no sound in headset and SAS LED is green, other LEDs are dark.

10. Engage SAS, HDG, and ALT modes. Verify no sound in headset and SAS, HDG, and ALT LEDs are green, other LEDs are dark. Press AP OFF button on cyclic grip. Verify no sound in headset and SAS LED is green, other LEDs are dark.

11. Engage SAS, HDG, and ALT modes. Verify no sound in headset and SAS, HDG, and ALT LEDs are green, other LEDs are dark. Press AP OFF button twice on cyclic grip. Verify four beeps in headset and SAS LED is white, other LEDs are dark.

B. Scheduled Maintenance and Inspections

Every 100-hour or annual inspection:

1. Inspect condition of associated equipment. Verify proper installation and security of equipment.

2. Inspect wiring condition. Verify no loose, chafed, or broken wires or terminals. Verify neatness, proper routing and installation, and security.

3. Inspect pitot and static lines for obstructions, cracking, chafing, pinching or kinking. Verify integrity of pitot and static line connections. Verify line security.

4. Perform ground checks per Part A.

22-62 Special Maintenance and Inspections

A. Troubleshooting

CAUTION

Adjustment to autopilot equipment is not permitted.

PROBLEM	ACTION
Control panel lights do not illuminate or flash when master switch is turned on.	Verify computer is getting power.
	Return computer to RHC.
System does not enter standby-mode (lights flash continuously).	Verify attitude indicator bank angle less than 6 degrees.
	Verify attitude indicator output between 13 and 14 pins is less than 0.3 volts at connector.
	Check wiring between attitude indicator and computer.
	Contact RHC Technical Support.
SAS does not engage when TRIM button depressed for longer than 1.25 seconds; pressing TRIM button does not reset reference attitude; pressing TRIM button does not reset reference altitude in altitude hold.	Check wiring between TRIM button and computer.
	Verify integrity of TRIM button.
	Return computer to RHC.
SAS does not disengage when cyclic grip AP OFF button depressed.	Check wiring between AP OFF button and computer.
	Verify integrity of AP OFF button.
	Return computer to RHC.
SAS does not engage or disengage when control panel buttons pressed.	Engage and/or disengage SAS using cyclic grip buttons. If system responds properly, failure is in control panel or associated wiring to computer.
	Contact RHC Technical Support.
SAS does not hold pitch attitude, but holds roll attitude or vice versa.	Check servo-to-cyclic linkage.
	Check wiring between faulty servo and computer.
	Return faulty servo and computer to RHC.
SAS disengages unintentionally (accompanied by four beeps in headset).	Contact RHC Technical Support.
Autopilot mode disengages unintentionally, and reverts to SAS mode (accompanied by single beep in headset).	Determine if navigation signal may have gone invalid due to operational reason.
	Check wiring between appropriate instrument/avionics and computer.
	Check instrument/avionics for failure flags (steady and intermittent).

22-62 Special Maintenance and Inspections (continued)

A. Troubleshooting (continued)

PROBLEM	ACTION
Cyclic vibrates erratically, SAS does not disengage.	Manually override SAS, system should disengage automatically.
	Contact RHC Technical Support.
Helicopter enters low frequency pitch oscillation when ALT engaged; helicopter diverges nose-up or nose-down when ALT engaged.	Return computer to RHC.
ILS glideslope tracking performance is poor.	Check for excessive friction in longitudinal cyclic.
	Check GPS output to computer.
Cyclic force seems higher than normal with SAS disengaged.	Verify servo clutches are disengaged, and clutch arms do not move when SAS is Off or in standby-mode.
No aural warning in headset when SAS is disengaged.	Check wiring to unswitched audio input to audio panel.

Intentionally Blank

CHAPTER 25

FURNISHINGS

Section	Title	Page
25-00	Description	25.1
25-10	Seat Harnesses	25.3
25-11	Seat Harness Removal	25.3
25-12	Seat Harness Installation	25.4
25-20	Seat Assemblies and Back Rests	25.5
25-21	Seat Assembly Removal and Installation	25.5
25-22	Back Rest Assembly Removal and Installation	25.5
25-23	Back Rest Cushion Replacement	25.5
25-30	Carpet	25.7
25-40	Insulation (Foam and Headliner)	25.8
25-50	General Maintenance	25.8
25-51	Pilot's Operating Handbook (POH) Strap Replacement	25.8
25-52	License Holder Replacement	25.9
25-53	Map Pocket Replacement	25.9
25-60	Emergency Equipment	25.10
25-61	Emergency Locator Transmitter (ELT)	25.10
25-62	Fire Extinguisher	25.11

Intentionally Blank

CHAPTER 25

FURNISHINGS

25-00 Description

The seats are not adjustable but the pilot-side pedals are adjustable. Each helicopter is supplied with a cushion which can be placed behind the pilot to position him forward. This allows shorter pilots to reach the pedals, the cyclic stick in its most forward position, and the controls on the center console.

Each seat is equipped with a combined seat belt and inertia reel shoulder strap. The inertia reel is normally free but will lock if there is sudden movement as would occur in an accident.

Five-point harnesses are optional for the front seats. The five-point harness is equipped with a webbing stop located above the inertia reel. The stop limits shoulder strap retraction and should be adjusted so the straps are comfortable without excessive slack.

The main baggage compartment is located between the cabin and the engine compartment. It is accessed via a large door on the aircraft right side. The cowl door annunciator illuminates to warn the pilot when the door is not latched. A light illuminates the compartment when the battery switch is ON. Tie down anchors are provided for securing items in the baggage compartment. Observe placarded weight limits. Placard locations and illustrations are given in Chapter 11.

Additional compartments are located under each seat except the center rear seat. Seat cushions hinge forward for access to these compartments. Do not load these compartments above the maximum fill lines. The lines indicate required crush space for the seats in an accident. Baggage compartment dimensions are given in Chapter 6.

WARNING

Never repair or modify seat assemblies, including seat assembly fabric, seat pans, or hook and loop tape (Velcro) securing fabric to seat pans. Seat assembly energy-absorption design is critical to occupant safety. To preserve crashworthiness, maintenance is limited to seat assembly replacement.

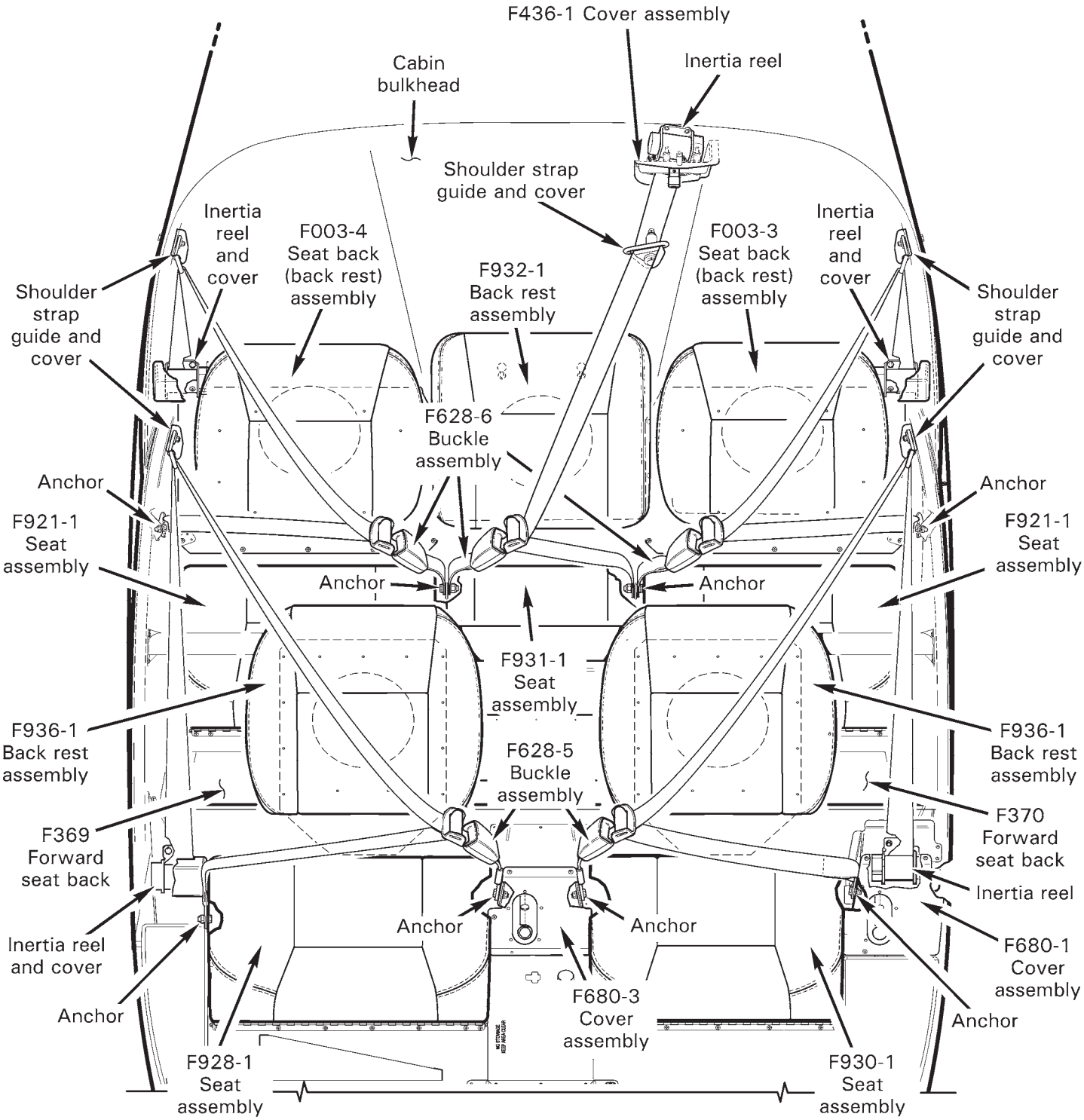

FIGURE 25-1 SEAT HARNESSES, SEAT ASSEMBLIES, AND BACK RESTS

25-10 Seat Harnesses

Refer to R66 Illustrated Parts Catalog (IPC) Figures 25-3 and 25-5. Refer to Figures 25-9, 25-11, and 25-13 for optional Five-Point Harness Installation.

25-11 Seat Harness Removal

A. Forward Seat Harness (Standard)

1. Refer to Figure 25-1. Remove F680-1 and F680-3 collective cover assemblies; hinge seat assemblies forward.
2. Remove hardware securing each F628-5 buckle assembly to inboard anchor, and hardware securing each lap belt fitting to outboard anchor.
3. Remove shoulder strap guide covers and hardware securing guides to door frames.
4. Remove right side inertia reel cover and hardware securing reels to F369 and F370 forward seat backs. Remove seat harnesses.

B. Five-Point Harness (Optional, not shown; for forward seats only)

1. Remove screws securing F424-1 bumper assembly to F423-4 tube assembly and remove bumper.
2. Refer to Figure 25-1. Remove F680-1 and F680-3 collective cover assemblies; hinge seat assemblies forward.
3. Remove hardware securing lap belts to inboard and outboard anchors. Remove hardware securing fifth-point belts to seat boxes.
4. Remove hole plugs, then remove inertia reel covers and hardware securing reels to F369 and F370 forward seat backs. Remove five-point harnesses.

C. Aft Left and Right Seat Harness

1. Refer to Figure 25-1. Remove F931-1 seat assembly; hinge left and right seat assemblies forward.
2. Remove hardware securing each F628-6 buckle assembly to inboard anchor, and hardware securing each lap belt fitting to outboard anchor.
3. Remove shoulder strap guide covers and hardware securing guides to door frames.
4. Remove inertia reel covers and hardware securing reels to cabin bulkhead.

D. Center Seat Harness

1. Remove tailcone cowling per Section 53-23.
2. Refer to Figure 25-1. Remove F931-1 seat assembly; hinge left and right seat assemblies forward.
3. Remove hardware securing F628-6 buckle assembly to inboard right side anchor and hardware securing lap belt fitting to inboard left side anchor.
4. Remove shoulder strap guide cover and hardware securing guide to cabin bulkhead and upper frame.
5. Remove F436-1 (headset jack) cover assembly and hardware securing inertia reel to cabin bulkhead.

25-12 Seat Harness Installation

A. Forward Seat Harness (Standard)

1. Refer to Figure 25-1. Install hardware securing inertia reels to F369 and F370 forward seat backs. Install right side reel cover.
2. Install hardware securing shoulder strap guides to door frames. Standard torque bolts per Section 20-32. Install guide covers.
3. Install hardware securing F628-5 buckle assemblies to inboard anchors, and lap belt fittings to outboard anchors. Position buckle swage between two forward rivets. Standard torque bolts per Section 20-32.
4. Install F680-1 and F680-3 collective cover assemblies.

B. Five-Point Harness (Optional, not shown; for forward seats only)

1. Attach inertia reels to F369 and F370 forward seat backs. Install covers and hole plugs. Verify security.
2. Attach lap belt fittings to inboard and outboard anchors. Standard torque bolts per Section 20-32.
3. Attach fifth point belts to seat boxes.
4. Refer to Figure 25-1. Install F680-1 and F680-3 collective cover assemblies; hinge seat assemblies forward.
5. Position F424-1 bumper assembly on F423-4 tube assembly and install screws. Verify security.

C. Aft Left and Right Seat Harness

1. Refer to Figure 25-1. Install hardware securing inertia reels to cabin bulkhead. Install reel covers.
2. Install hardware securing shoulder strap guides to door frames. Standard torque bolts per Section 20-32. Install guide covers.
3. Install hardware securing F628-6 buckle assemblies to inboard anchors, and lap belt fittings to outboard anchors. Standard torque bolts per Section 20-32.
4. Install F931-1 seat assembly.

D. Center Seat Harness

1. Refer to Figure 25-1. Install hardware securing inertia reel to cabin bulkhead. Install F436-1 (headset jack) cover assembly. Verify security.
2. Install hardware securing shoulder strap guide to cabin bulkhead and upper frame. Standard torque bolt per Section 20-32. Install guide cover.
3. Install hardware securing F628-6 buckle assembly to inboard right side anchor, and lap belt fitting to outboard left side anchor. Standard torque bolts per Section 20-32.
4. Install F931-1 seat assembly.
5. Install tailcone cowling per Section 53-23.

25-20 Seat Assemblies and Back Rests

Refer to R66 Illustrated Parts Catalog (IPC) Figure 25-1.

25-21 Seat Assembly Removal and Installation

WARNING

Never repair or modify seat assemblies, including seat assembly fabric, seat pans, or hook and loop tape (Velcro) securing fabric to seat pans. Seat assembly energy-absorption design is critical to occupant safety. To preserve crashworthiness, maintenance is limited to seat assembly replacement.

A. Seat Assembly

1. Refer to Figure 25-1. Remove or install hardware securing forward hinge to seat box.

B. Center Seat Assembly

1. Refer to Figure 25-1. Center seat assembly attaches and detaches to and from the seat box via hook and loop tape (Velcro).

25-22 Back Rest Assembly Removal and Installation

A. Aft Left and Right Back Rest Assembly

1. Refer to Figure 25-1. Remove or install hardware securing back rest assembly to cabin bulkhead.

B. Center Back Rest Assembly

1. Refer to Figure 25-1. Detach back rest assembly hook and loop tape (Velcro) at bottom; slide back rest assembly up and out of keyhole slots.
2. Install back rest assembly in keyhole slots and slide down. Press firmly on back rest assembly hook and loop tape (Velcro) at bottom. Verify security.

25-23 Back Rest Cushion Replacement

A. Forward Back Rest

1. Refer to Figure 25-1. Drill out rivets securing back rest cushion to seat back panel and deburr holes. Remove cushion.
2. Remove old adhesive residue from back rest support tube with plastic wedge. Wipe surface with clean cloth, wet with acetone.
3. Center and straighten new cushion on seat back panel. Match drill seat back panel #30 holes through cushion panel and deburr. Clean up debris.
4. Attach back rest cushion to seat back panel with rivets.
5. Apply B270-18 adhesive to underside of back rest cushion flap and to mating portion of support tube. Pull flap around tube, smooth wrinkles, and trim excess flap. Remove excess adhesive prior to curing.

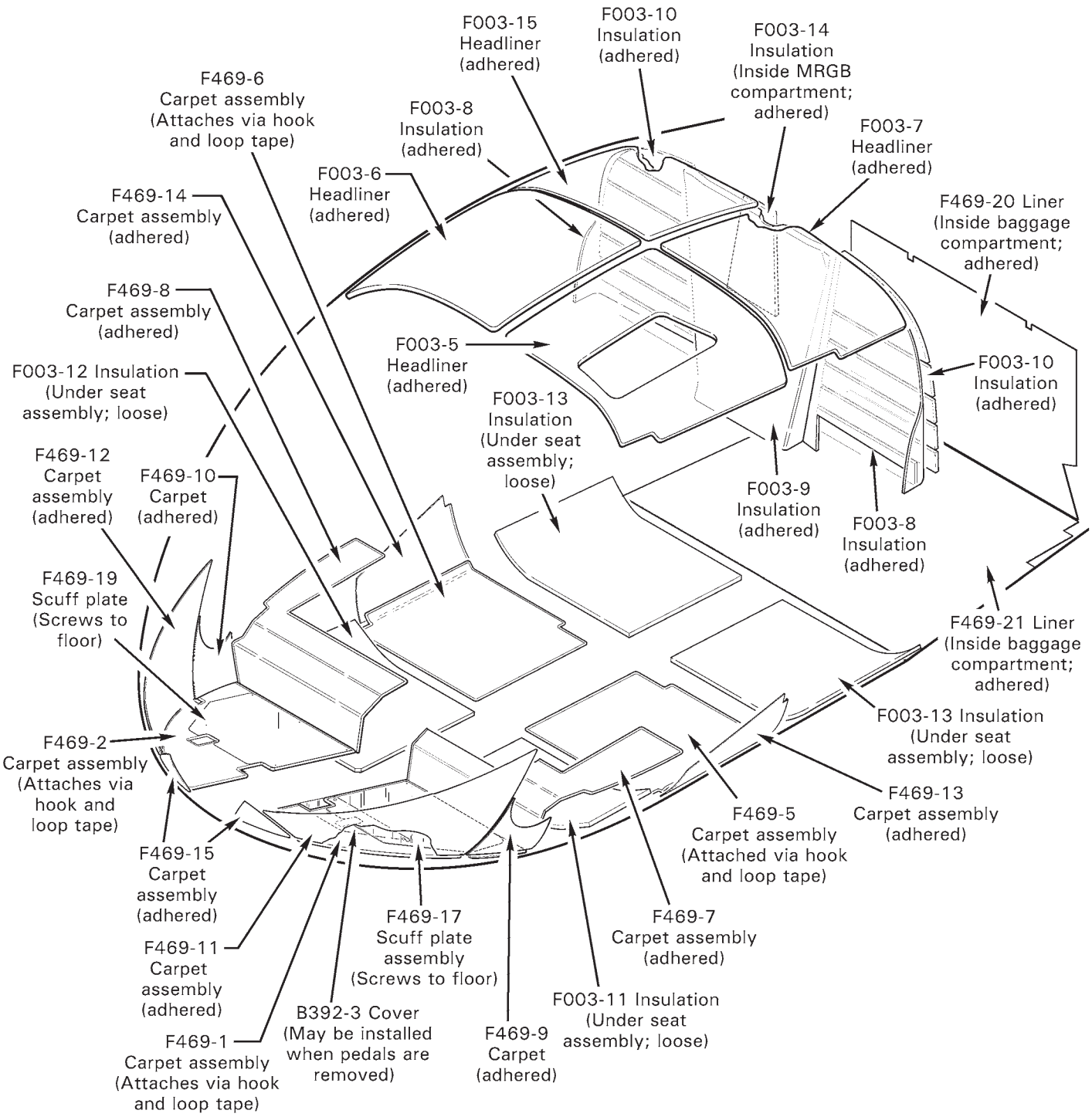

FIGURE 25-2 CARPET AND INSULATION

25-23 Back Rest Cushion Replacement (continued)

B. Aft Left and Right Back Rest

1. Refer to Figure 25-1. Remove back rest assembly per Section 25-22.
2. Drill out rivets securing back rest cushion to seat back panel and deburr holes. Remove cushion.
3. Center and straighten new cushion on seat back panel. Match drill seat back panel #30 holes through cushion panel and deburr. Clean up debris.
4. Attach back rest cushion to seat back panel with rivets.
5. Install back rest assembly per Section 25-22.

25-30 Carpet

Refer to R66 Illustrated Parts Catalog (IPC) Figure 25-15.

A. Forward (Floor) Carpet Assembly Removal

1. Refer to Figure 25-2. Remove adjustable and/or removable pedals, as required.
2. Remove hardware securing scuff plates (and carpet) to cabin floor. Detach carpet from floor via hook and loop tape (Velcro).

B. Forward (Floor) Carpet Assembly Installation

1. Refer to Figure 25-2. Attach carpet to floor via hook and loop tape (Velcro).
2. Install scuff plates; install B392-3 left-side cover (may be installed when pedals are removed), as required.
3. Install adjustable and/or removable pedals, as required.

C. Aft (Floor) Carpet Assembly Removal and Installation

1. Refer to Figure 25-2. Attach or detach carpet to and from floor via hook and loop tape (Velcro).

D. Carpet and Liner

CAUTION

Use caution when removing adhered carpet if carpet is intended for reuse.

1. Removal
   a. Starting at corners, gently peel back carpet by hand, or with plastic wedge or putty knife.
   b. Dampen old adhesive with Dupont Prep-Sol (or equivalent) to facilitate removal.
2. Installation
   a. Verify proper carpet fit. Trim as required (do not trim carpet welt).
   b. Apply B270-8 adhesive to bonding surface and carpet backing. Press carpet to surface, smooth wrinkles, and remove excess adhesive prior to curing.

25-40 Insulation (Foam and Headliner)

Refer to R66 Illustrated Parts Catalog (IPC) Figure 25-17.

A. Removal

> NOTE
>
> Use caution not to damage surface underneath insulation when removing insulation with tools.

> NOTE
>
> Insulation is installed using adhesive, except under seat assemblies. Order new insulation as required; reuse of removed insulation is not recommended.

1. Peel off insulation by hand.
2. Using plastic wedge or putty knife, carefully remove residual insulation and old adhesive.
3. Wipe bonding surface with clean cloth, wet with acetone.

B. Installation

1. Verify proper insulation fit. Trim as required.
2. Apply B270-8 adhesive to bonding surface and insulation backing. Press insulation to surface, smooth wrinkles, and remove excess adhesive prior to curing.

25-50 General Maintenance

25-51 Pilot's Operating Handbook (POH) Strap Replacement

Refer to R66 Illustrated Parts Catalog (IPC) Figure 25-19.

A. Removal

1. Remove POH.
2. Drill out rivets securing POH retaining strap to cabin right side and remove strap. Deburr holes and clean up debris.

B. Installation

1. Cleco POH retaining strap to cabin right side holes. Remove clecos and install rivets. Verify security.
2. Install POH.

25-52 License Holder Replacement

Refer to R66 Illustrated Parts Catalog (IPC) Figure 25-11.

A. Removal

1. Remove aircraft documents from license holder.

2. Drill out rivets securing license holder to cabin under left side windshield frame and remove license holder. Deburr holes and clean up debris.

B. Installation

1. Cleco license holder to cabin holes under left side windshield frame. Remove clecos and install rivets. Verify security.

2. Insert aircraft documents into holder and tuck upper flap into frame.

25-53 Map Pocket Replacement

Refer to R66 Illustrated Parts Catalog (IPC) Figure 25-11.

A. Removal

1. Drill out rivets securing map pocket to front wall of forward seat box. Remove pocket, washers, and retaining strips. Deburr holes and clean up debris.

B. Installation

1. Fold (long) outboard pocket edge around (long) A913-1 strip, align holes, and align holes with front of forward seat box. Cleco in place.

2. Pull material taut, fold (short) inboard pocket edge around (short) A913-2 strip, align holes, and align holes with front of forward seat box. Cleco in place. Trim excess material.

3. Remove clecos and install washers and rivets.

25-60 Emergency Equipment

25-61 Emergency Locator Transmitter (ELT)

NOTE

ELT installation is optional equipment.

A. ELT Information and Programming

Refer to Section 96-90 for ELT system description. Refer to Section 5-20 for scheduled maintenance.

Refer to ELT Kannad 406 AF-Compact/406 AF-Compact (ER) Installation and Operation Manual for maintenance requirements and procedures. Additional ELT information is available on the RHC website at: http://www.robinsonhelicopter.com/supportelt.htm.

Register an ELT when first purchased, when contact information changes, or when aircraft ownership, or tail number changes. For registration information, visit the COSPAS-SARSAT website at: http://cospas-sarsat.org.

Kannad 406 AF-Compact ELTs are interchangeable between aircraft. A dongle contains a memory chip that must be programmed with aircraft-specific information prior to installation for the ELT to function. The dongle may be removed and shipped to RHC or a Kannad service center for reprogramming.

B. Transmitter Removal and Installation

The ELT activates when subjected to a significant change in velocity (as in an accident), by remote control switch located on the cyclic control panel, or by a switch on the ELT transmitter.

NOTE

Do not cut B359-2 releasable, reusable ty-rap.

1. To remove ELT transmitter:

   a. Follow instructions hot stamped on ty-rap: "PULL RED TAB TO REMOVE."

   b. Release Velcro strap and remove transmitter. Disconnect dongle & antenna lead.

2. To install ELT transmitter:

   a. Connect dongle and antenna lead and install transmitter. Secure Velcro strap and install B359-2 ty-rap.

C. Dongle Removal and Installation

1. Cut and discard ty-raps as required, disconnect dongle from plastic connector and ELT transmitter, and remove dongle.

2. Connect programmed dongle to plastic connector and ELT transmitter, and install ty-raps as required. Cinch ty-raps until snug without over-tightening, and trim tips flush with heads.

25-62 Fire Extinguisher

Refer to R66 Illustrated Parts Catalog (IPC) Figure 25-13.

NOTE
Fire extinguisher installation is optional equipment.

A. Inspection

Inspect fire extinguisher monthly according to manufacturer's instructions. Maintenance instructions are located on extinguisher bottle. Record inspection date and findings as required.

B. Bracket Removal

1. Unlock fire extinguisher bracket and remove extinguisher.
2. Remove hardware securing bracket to cabin under left side windshield frame and remove bracket.

C. Bracket Installation

1. Install hardware securing fire extinguisher bracket to cabin under left side windshield frame. Select screw length as required to provide 0.00-0.06 inch thread exposure. Verify security.
2. Inspect fire extinguisher per Part A.
3. Install fire extinguisher and lock extinguisher bracket.

Intentionally Blank

CHAPTER 28

FUEL SYSTEM

Section	Title	Page
28-00	Description	28.1
28-10	Bladder Assembly	28.3
28-11	Rollover Valves	28.5
28-12	Sump Valve	28.6
28-20	Fuel Quantity	28.7
28-21	Fuel Quantity Sender	28.7
28-22	Low-Fuel Switch Assembly	28.10
28-30	Fuel Valve	28.13
28-31	Fuel Valve Control Rigging	28.13
28-40	Fuel Flow Check	28.14
28-50	Aux Fuel System	28.17
28-51	Tank Assembly	28.18
28-52	Support Assembly	28.20
28-53	Bladder	28.21
28-54	Fuel Quantity Sender	28.25
28-55	Pump Assembly	28.25

Intentionally Blank

CHAPTER 28

FUEL SYSTEM

28-00 Description

A single bladder-type crash-resistant fuel cell supplies fuel via gravity flow to the engine. The fuel cell incorporates left and right vent fittings, a filler port, a fuel gage sender, a low-fuel switch assembly, a sump drain, and a finger strainer at the fuel outlet. The low-fuel switch assembly activates the LOW FUEL segment on the annunciator panel, indicating approximately five gallons of usable fuel remaining. The vent fittings each have a rollover valve to prevent fuel leakage in any attitude.

The fuel cell is secured inside an aluminum structure. The filler cap is located under a cowl door. The left and right side vent fittings are interconnected and vent through two risers within the mast fairing. A fuel valve is located on the forward side of the firewall and is controlled by a push-pull cable control at the base of the pilot's collective stick.

The engine incorporates a fuel pump assembly with an inlet filter. A differential pressure switch illuminates the FUEL FILTER warning light if the filter becomes contaminated.

A single drain allows fuel sampling from the low point in the fuel cell. The drain tube is accessible via a left side cowl door. The drain is opened by extending the plastic tube clear of the aircraft and pushing up on the drain.

Refer to § 28-50 for optional aux fuel tank installation system description.

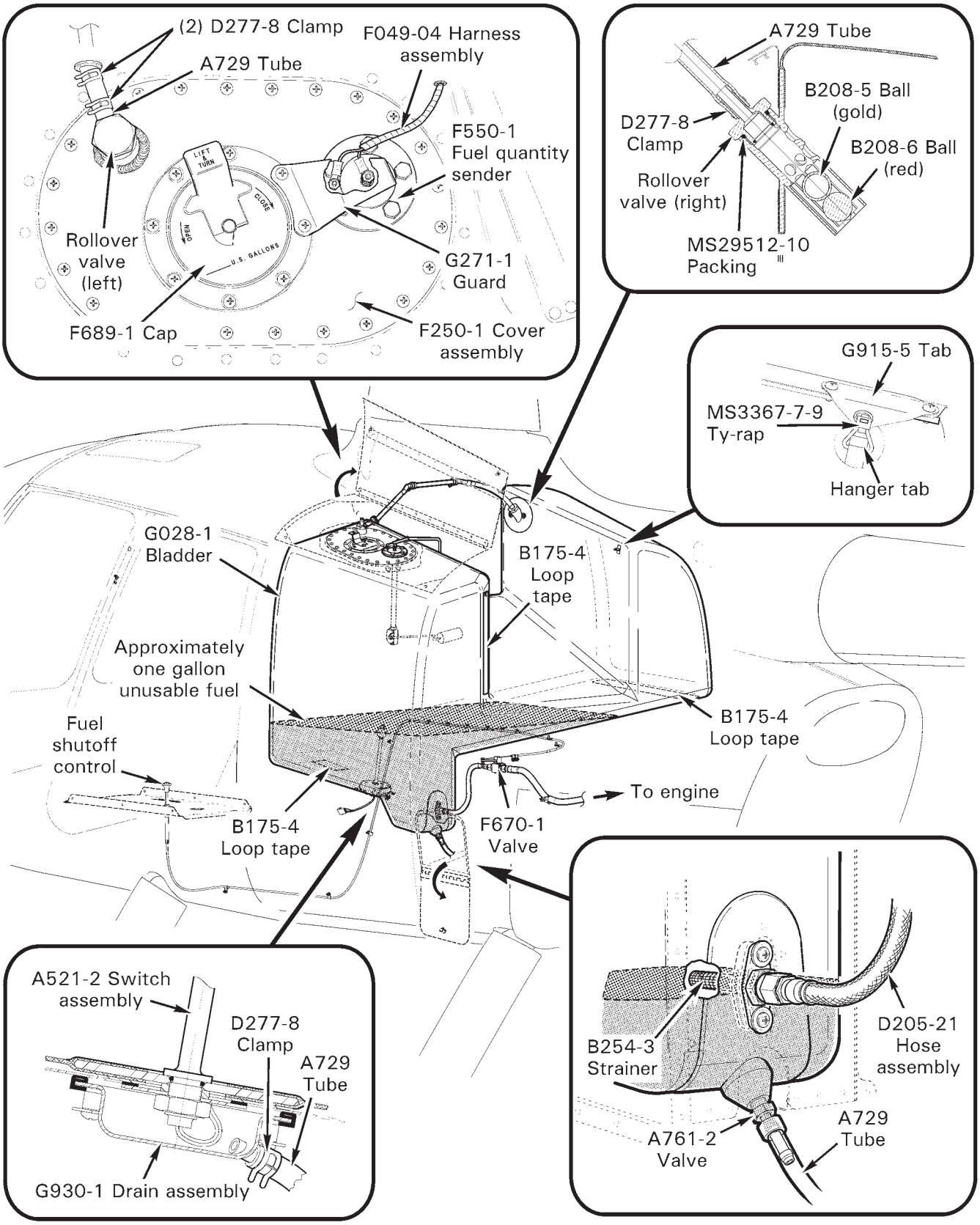

FIGURE 28-1 MAIN FUEL SYSTEM

28-10 Bladder Assembly

CAUTION

G028-1 bladder assembly temperature should be above 65°F before removing, installing, or flexing bladder.

A. Removal

1. Defuel helicopter per § 12-42.
2. Remove tailcone cowling assembly per § 53-23.
3. Remove fuel quantity sender per § 28-21.
4. Refer to Figure 28-1. Remove D277-8 clamps or cut and discard safety wire securing A729 tube to left rollover valve and pull tube off of valve. Remove screws securing F250-1 cover assembly to G028-1 bladder assembly and F028-1 support assembly and remove cover. Remove and discard o-ring.
5. Remove D277-8 clamp or cut and discard safety wire securing A729 tube to right rollover valve and pull tube off of valve. Remove screws and washers securing valve to bladder and support. Cut and discard ty-rap securing 35486 hanger tab to G915-5 tab.
6. Remove low-fuel switch assembly per § 28-22. Tape bladder openings.
7. Disconnect D205-21 (fuel outlet) hose assembly from B254-3 strainer and cap fittings. Remove screws and washers securing strainer to bladder and support. Remove strainer and tape bladder opening.
8. Remove sump valve per § 28-12.
9. Remove hardware securing G004-4 (right side, aft fuselage) skin to cabin and remove skin. Detach bladder hook tape from support loop tape, and remove bladder through right side opening.

28-10 Bladder Assembly (continued)

B. Installation

1. Refer to Figure 28-1. Dust exterior of G028-1 bladder assembly and F028-1 support assembly floor with talcum powder to facilitate bladder slippage along metal surface. Do not allow powder to enter bladder.
2. Note locations of hook and loop tape on bladder lower surface and support floor. Orient bladder, fold into thirds, place in center of support, and unfold into position.
3. Apply light coat A257-9 anti-seize to screw threads and install screws and washers securing right rollover valve to bladder and support; verify security. Secure A729 tube to valve using D277-8 clamp; verify security.
4. Install (new) MS3367-7-9 ty-rap securing 35486 hanger tab to G915-5 tab. Cinch ty-rap until snug without over-tightening, and trim tip flush with head.

NOTE

Verify bladder is free of wrinkles across lower surface and properly located before attaching hook and loop tape. Bladder may be pressurized with air to 1 psi max to assist installation.

CAUTION

Avoid contaminating bladder assembly interior. Cover arms with sleeves and use lint-free gloves when working inside bladder.

5. Remove tape from bladder assembly openings. Insert a clean, smooth, blunt wooden dowel through bladder's fuel port opening and press on bladder lower surface to attach hook and loop tape. Verify security.
6. Install low-fuel switch assembly per § 28-22.
7. Apply light coat A257-9 anti-seize to screw threads and install screws and washers securing bladder outlet to support. Lubricate new MS29512-06 packing using A257-6 grease and install on B254-3 strainer. Install strainer in bladder and special torque strainer per § 20-33.
8. Remove caps and connect D205-21 hose assembly to strainer. Using backup wrench, special torque hose nut per § 20-33, and torque stripe per Figure 5-1.
9. Install sump valve per § 28-12.
10. Lubricate (new) MS29513-270 packing using A257-6 grease and install packing in recess at bladder's fuel port opening. Apply light coat A257-9 anti-seize to screw threads and install screws securing F250-1 cover assembly to bladder and support; verify security. Secure A729 tube to left rollover valve using D277-8 clamps; verify security.
11. Install fuel quantity sender per § 28-21.

28-10 Bladder Assembly (continued)

B. Installation (continued)

12. Service helicopter with minimum two gallons fuel per § 12-41. Verify no leaks, especially at bladder outlets. Install G004-4 (right side, aft fuselage) skin and install hardware securing skin to cabin; verify security.
13. Perform fuel flow check per § 28-40.
14. Install tailcone cowling assembly per § 53-23.

28-11 Rollover Valves

WARNING

Orientation of rollover valve balls is critical to valve operation. The gold ball on top (earlier ball on top was blue) floats and seals the vent in the event of inadvertent over-filling or in-flight sloshing. The red ball on bottom presses the top ball against the vent seat if the aircraft is inverted.

A. Packing Replacement and Valve Inspection

1. Remove tailcone cowling assembly per § 53-23, as required.
2. Refer to Figure 28-1. Remove D277-8 clamp(s) or cut and discard safety wire securing A729 tube to rollover valve and pull tube off of valve.
3. Remove G254-2 fitting or G254-6 retainer. Remove and discard MS29512-10 packing (G254-2 fitting only) and A215-015 o-ring.
4. Carefully remove B208-5 and B208-6 balls using a suction cup attached to a syringe. Inspect condition of balls, valve body, and fitting or retainer. Clean parts and verify no nicks, scratches, gouges, dents, cracks, or corrosion.
5. Carefully install B208-6 ball (red, solid) on bottom and B208-5 ball (gold or blue, hollow) on top in valve body using a suction cup attached to a syringe.
6. Install new A215-015 o-ring in groove inside fitting or retainer. Lubricate new MS29512-10 packing using A257-6 grease and install over G254-2 fitting threads.
7. Install fitting or retainer and special torque per § 20-33.
8. Secure A729 tube to valve using D277-8 clamp; verify security.
9. Install tailcone cowling assembly per § 53-23, as required.

28-12 Sump Valve

A. Removal

1. Defuel helicopter per § 12-42.
2. Refer to Figure 28-1. Cut and discard safety wire (if installed) securing A729 tube to A761-2 or 1250H (sump) valve and remove tube.
3. Remove valve from G154-1 outlet assembly; tape bladder opening.
4. Actuate and lock valve to expose stem; remove and discard o-ring.

B. Installation

1. Actuate and lock A761-2 or 1250H (sump) valve to expose stem; install (new) o-ring in stem seat.
2. Refer to Figure 28-1. Lightly coat valve threads using B270-6 sealant. Remove tape and install valve in bladder outlet. Standard torque valve per § 20-32 and torque stripe per Figure 5-1.
3. Secure A729 to valve stem. Note: safety wire is not required.
4. Service helicopter with minimum two gallons fuel per § 12-41. Verify no leaks.

28-20 Fuel Quantity

28-21 Fuel Quantity Sender

CAUTION

Avoid contaminating bladder interior. Cover arms with sleeves and use lint-free gloves when working inside bladder.

A. Removal

1. Turn battery switch off and pull out (2 amp) GAGES circuit breaker at panel.
2. a. Main tank: Refer to Figure 28-1. Remove screws securing G271-1 guard to F250 cover assembly and remove guard.

   b. Aux tank: Refer to Figure 28-5. Remove screws securing G271-1 guard to G759-1 cover assembly and remove guard.

CAUTION

Rotation of fuel sender center stud or base nut is not permitted.

3. a. Main tank: Using a backup wrench, remove hardware securing F049-04 harness assembly to F550-1 fuel quantity sender.

   b. Aux tank: Disconnect G768-4 harness assembly from airframe harness at connectors.
4. Remove bolts securing fuel sender to cover assembly. Carefully pull fuel sender lever through opening. Tape bladder opening.

B. Installation

1. Perform fuel sender check per Part C.
2. Turn battery switch off and pull out (2 amp) GAGES circuit breaker at panel.
3. a. Main tank: Refer to Figure 28-1. Remove tape and carefully lower F550-1 fuel quantity sender lever through F250-1 cover assembly opening.

   b. Aux tank: Refer to Figure 28-5. Remove tape and carefully lower F550-2 fuel quantity sender lever through G759-1 cover assembly opening.
4. Install bolts securing fuel sender to cover assembly. Special torque bolts in criss-cross pattern per § 20-33 and torque stripe per Figure 5-1.

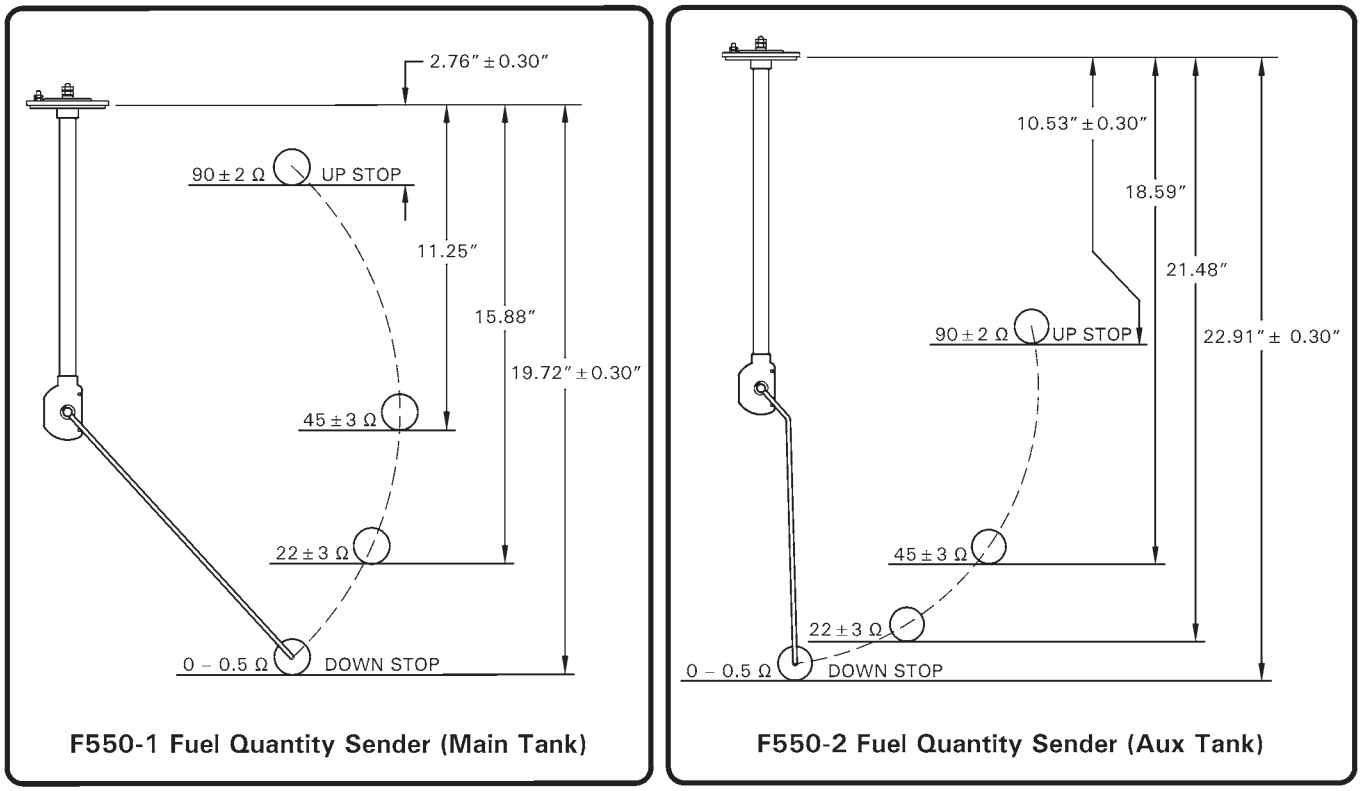

FIGURE 28-2 FUEL SENDER CHECK

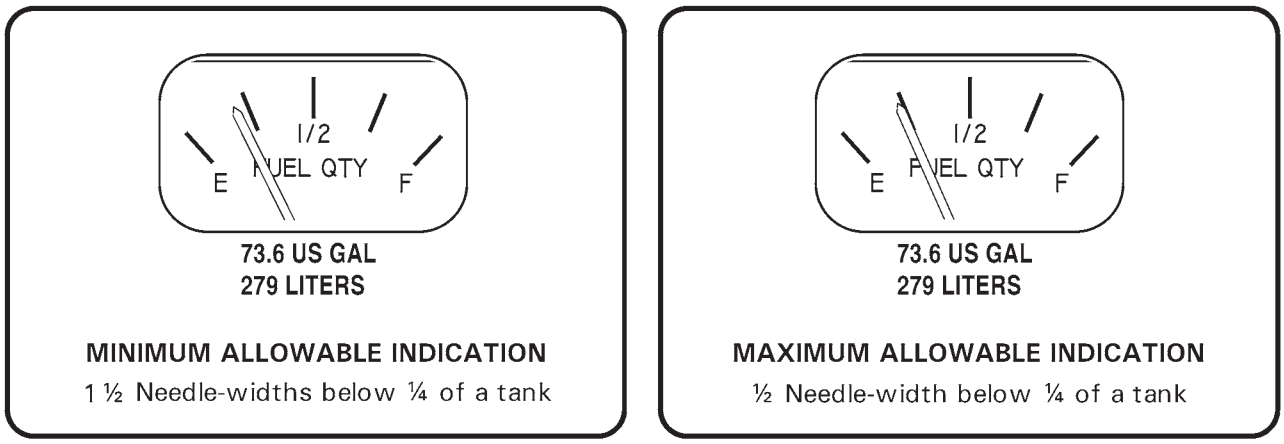

FIGURE 28-3 FUEL INDICATION CHECK

28-21 Fuel Quantity Sender (continued)

B. Installation (continued)

> **CAUTION**
>
> Rotation of fuel sender center stud or base nut is not permitted.

5. a. Main tank: Using a backup wrench, install hardware securing F049-04 harness assembly to fuel sender. Special torque nuts per § 20-33, standard torque palnuts per § 20-32, and torque stripe per Figure 5-1.

   b. Aux tank: Connect G768-4 harness assembly to airframe harness at connectors. Verify security.

6. Apply light coat A257-9 anti-seize to threads and install screws securing G271-1 guard to cover assembly. Verify security.

7. Perform fuel indication check per Part D.

C. Fuel Sender Check

1. Remove fuel sender per Part A.

2. Simulate mounting position of appropriate F550 fuel quantity sender per Figure 28-2. Position float arm as shown and measure the resistance with a multimeter. Verify resistance is within tolerance at each noted height.

3. If resistance is out of tolerance at any height, bend float arm up for a fuel sender with excessive resistance, or bend float arm down for a fuel sender with too little resistance. Repeat steps until fuel sender resistance is within tolerance.

4. Install fuel sender per Part B.

D. Fuel Indication Check

1. Defuel helicopter per § 12-42.

2. Pull fuel valve into off position. Service helicopter with 19.4 gallons (main tank) or 10.1 gallons (aux tank) of fuel per § 12-41.

3. Refer to Figure 28-3. Push in (2 amp) GAGES circuit breaker at panel and turn battery switch on. (Press QUANTITY button on aux fuel control panel for aux tank quantity, displayed on fuel quantity gage.) Verify gage reads one-half needle width to one & one-half needle widths below one-quarter mark. If fuel gage indication is correct, proceed to step 5.

4. If fuel gage indication is incorrect, remove fuel quantity sender per Part A. Slightly bend sender lever up for a gage that reads too high, or down for a gage that reads too low. Install fuel quantity sender per Part B.

5. Turn battery switch off and push fuel valve into on position.

28-22 Low-Fuel Switch Assembly

CAUTION

Avoid contaminating bladder interior. Cover arms with sleeves and use lint-free gloves when working inside bladder.

A. Removal

1. Defuel helicopter per § 12-42.
2. Open baggage compartment door. Remove G248-1 (battery compartment) cover.
3. Refer to Figure 28-1. Remove D277-6 clamp or cut and discard safety wire securing A729 tube to G930-1 drain assembly. Remove screws securing G930-4 retainer and drain assembly to G250-1 sump tray.
4. Remove fuel cap. Carefully capture A521-2 switch assembly body with clean mechanical fingers (avoid capturing float).
5. Inside baggage compartment, remove nut, washer assembly, and spacer securing A521-2 switch assembly to tray. Disconnect F049 harness assembly from switch assembly at connectors; extract switch assembly pins from housing.
6. Carefully pull switch assembly through (fuel cap) opening, avoiding fuel sender. Install fuel cap and tape bladder opening.

B. Installation

1. Install (new) MS29512-05 packing over switch assembly threads.
2. Refer to Figure 28-1. Remove fuel cap. Tape A521-1 switch assembly wiring to 4-ft length of lockwire; insert other end of wire through fuel cap opening and through switch assembly opening. Carefully grip switch assembly body with mechanical fingers and lower switch assembly to bottom of bladder. Inside baggage compartment, remove tape, guide wiring through opening, and install spacer, washer assembly, and nut securing switch assembly to G250-1 sump tray. Special torque nut per § 20-33 and torque stripe per Figure 5-1. Remove tape and lockwire. Release and remove mechanical fingers, and install fuel cap.
3. Assemble switch assembly pins in housing per Figure 98-1; connect F049 harness assembly to switch assembly at connectors. Fit wiring through gap in G930-1 drain assembly seal; install G930-4 retainer and screws securing retainer and drain assembly to tray. Verify security. Seal gap in drain assembly seal where wires pass thru using B270-5 sealant.
4. Secure A729 tube to drain assembly using D277-6 clamp; verify security.
5. Service helicopter with 7 gallons fuel per § 12-41. Verify no leaks around switch assembly. Open sump drain access door and verify no leaks from (low-fuel switch) drain tube. Perform operation check per Part C.
6. Install G248-1 (battery compartment) cover; verify security.

28-22 Low-Fuel Switch Assembly (continued)

C. Operation Check

1. Turn battery switch on.
2. Remove fuel cap. Insert a clean, non-sparking rod through (fuel cap) opening and gently depress A521-2 switch assembly float; verify LOW FUEL annunciator segment illuminates.
3. Remove rod and install fuel cap.
4. Turn battery switch off.

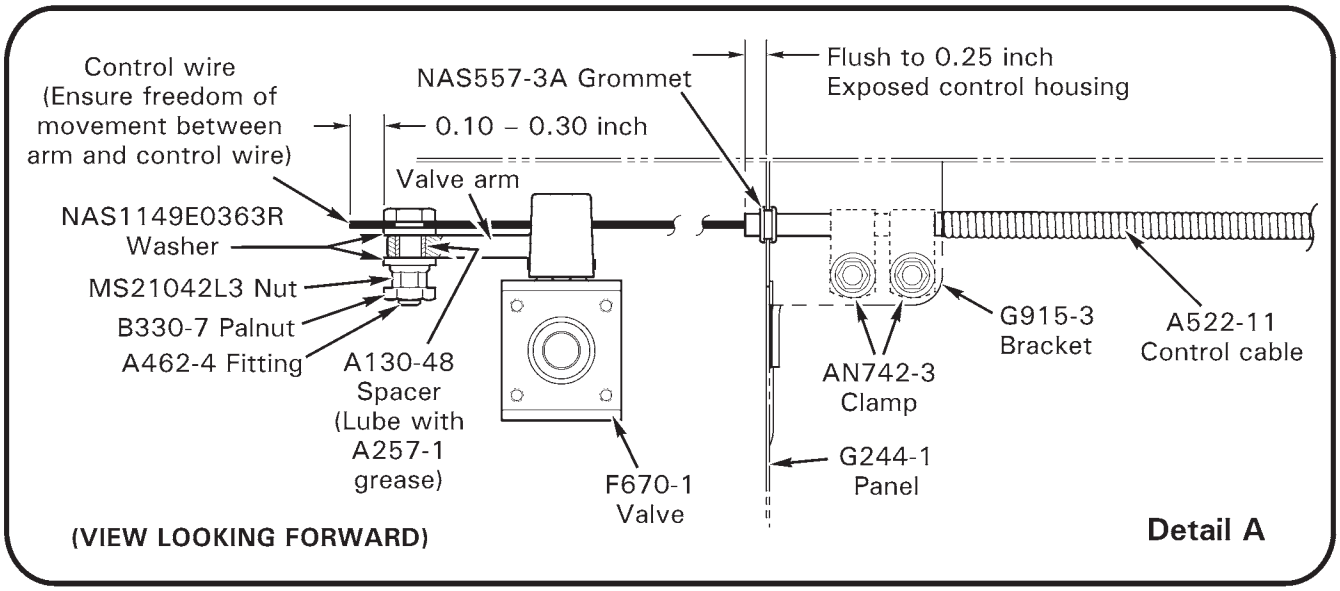

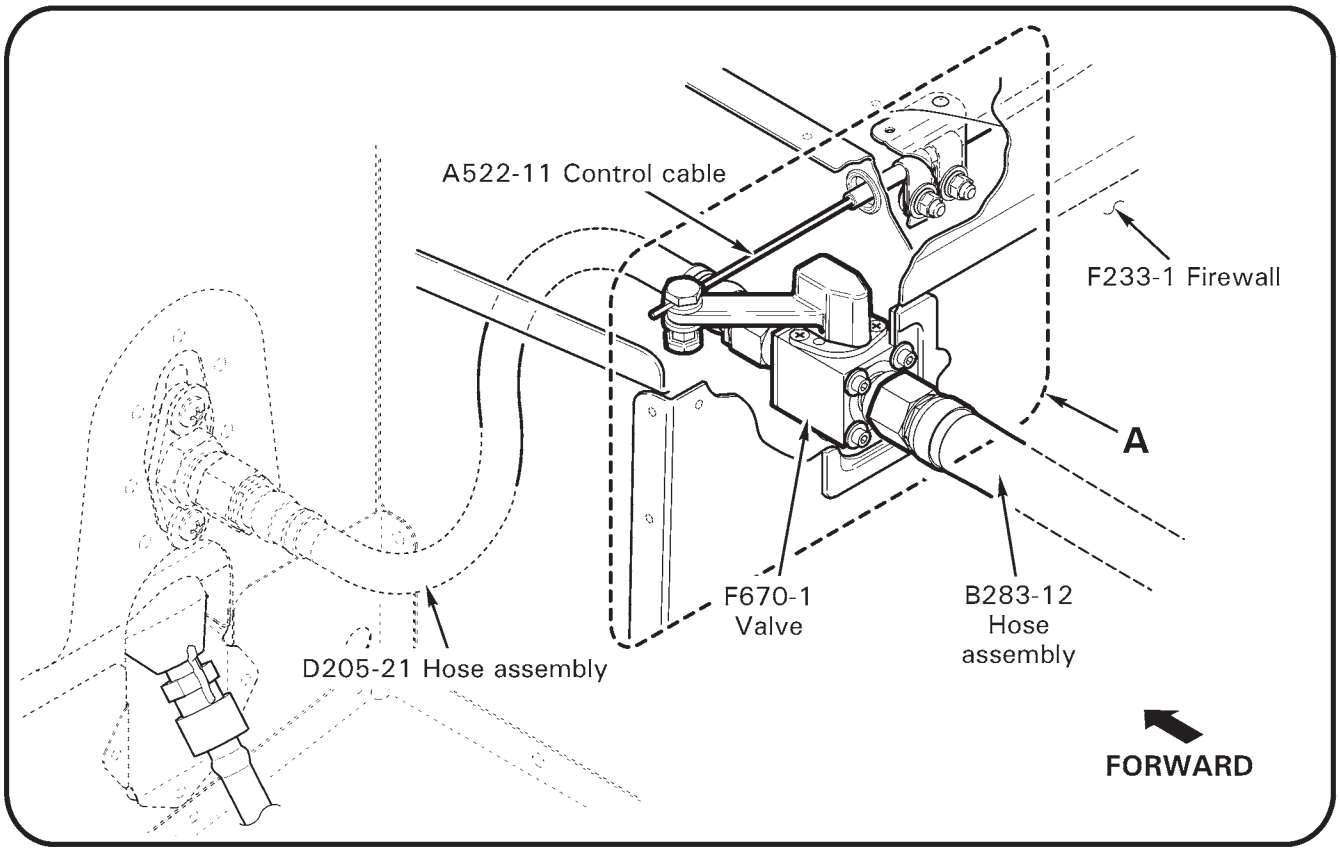

FIGURE 28-4 FUEL VALVE

28-30 Fuel Valve

A. Removal

1. Defuel helicopter per § 12-42.
2. Refer to Figures 28-1 and 28-4. Open sump drain access door. Remove palnut and loosen nut securing A462-4 fitting and A522-11 (fuel valve) control inner wire to F670-1 fuel valve arm.
3. Disconnect D205-21 and B283-12 hose assemblies from fuel valve and cap fittings.
4. Remove screws and washers securing fuel valve to F233-1 firewall and remove fuel valve through sump drain access door.

B. Installation

1. Refer to Figures 28-1 and 28-4. Install screws and washers securing F670-1 fuel valve to F233-1 firewall. Verify security.
2. Remove caps and connect D205-21 and B283-12 hose assemblies to fuel valve. Special torque hose nuts per § 20-33 and torque stripe per Figure 5-1.
3. Perform fuel valve control rigging per § 28-31.
4. Perform fuel flow check per § 28-40.

28-31 Fuel Valve Control Rigging

1. Refer to Figures 28-1 and 28-4. Open sump drain access door. Remove palnut and loosen nut securing A462-4 fitting and A522-11 (fuel valve) control inner wire to F670-1 fuel valve arm.
2. Open baggage compartment door. As required, loosen hardware securing AN742-3 clamps and control housing to G915-3 bracket. Position end of control housing flush to 0.25 inch at or beyond edge of G244-1 panel and install fasteners. Verify security.
3. Refer to detail in Figure 76-3. Push fuel valve into on position then pull up slightly to create 0.03-0.10 clearance under control knob. Position fuel valve arm in full open detent. Verify sufficient inner wire beyond outboard edge of fitting and special torque fitting nut per § 20-33.
4. Pull fuel valve into off position and verify valve arm fully contacts OFF detent. Push fuel valve into on position and verify valve arm fully contacts ON detent, meeting clearance requirement. Reposition fitting per previous steps, as required.
5. Install fitting palnut, standard torque per § 20-32, and torque stripe per Figure 5-1. Trim control wire 0.10-0.30 inch beyond aft edge of fitting.
6. Close sump drain access door. Close and latch baggage compartment door.

28-40 Fuel Flow Check

1. Open mast fairing per § 53-22. Remove engine cowling per § 53-21.
2. Refer to Figure 28-1. Attach a temporary hose to one of the vent weldment openings. With the fuel cap installed, blow into the hose (do not use compressed air) and verify air blows out the other vent opening. If air does not blow out the other vent, remove obstruction(s) in vent line(s) or in fuel bladder and repeat check.
3. Defuel helicopter per § 12-42, then service helicopter with 19.4 gallons of fuel per § 12-41.
4. Weigh a suitable, empty container having a volume of at least one gallon. Record weight of empty container in table below.
5. Pull fuel valve into off position and disconnect B283-12 hose assembly from the engine fuel inlet fitting.
6. Using a second, suitable container, push fuel valve into on position and drain fuel into second container for a few seconds to purge system of air. Then fill the weighed container for 60 seconds. Weigh and record weight of empty container & 60 seconds of fuel flow in table below.
7. Perform the following calculation:

Combined weight of empty container & 60 seconds fuel flow:		_____ lb
Subtract Weight of empty container:	−	_____ lb
Equals Weight of 60 seconds fuel:	=	_____ lb

8. Minimum fuel flow (at 19.4 gallons of fuel) is 4.75 lb/min (60 seconds). If fuel flow is less than 4.75 lb/min, remove obstruction(s) in vent line(s), fuel bladder, fuel hoses, fuel valve, or fuel strainer (inside bladder at outlet), and repeat check until fuel flow is satisfactory.
9. Close mast fairing per § 53-22. Install engine cowling per § 53-21.

Intentionally Blank

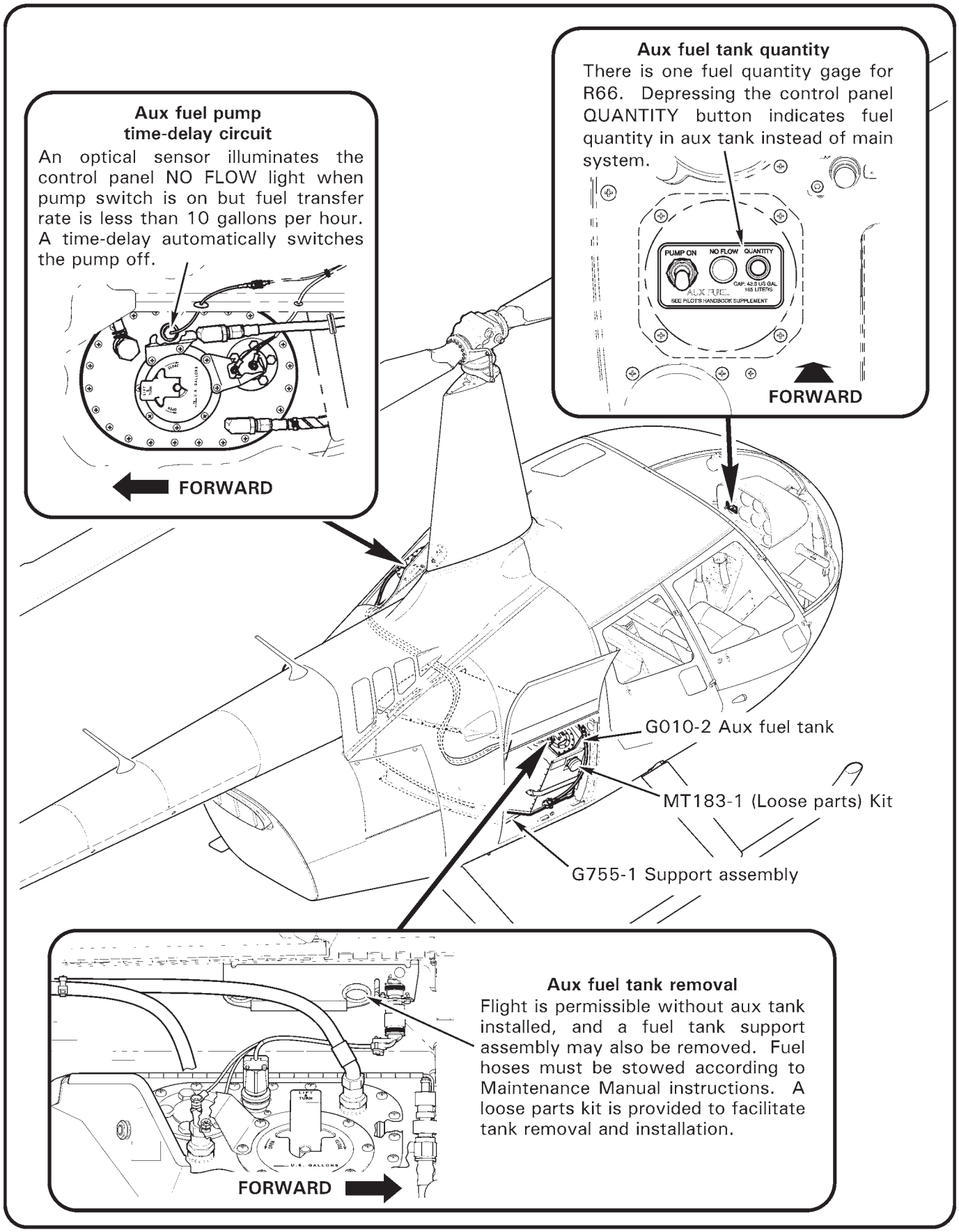

FIGURE 28-5 AUX FUEL SYSTEM

28-50 Aux Fuel System

A. Description

The auxiliary fuel system consists of a removable fuel tank located in the forward section of the baggage compartment, hoses connecting the auxiliary tank to the main fuel tank, and a small control panel on the instrument console.

The auxiliary fuel tank includes a crash-resistant bladder in an aluminum and fiberglass enclosure, an internal fuel transfer pump, a quantity sender, a filler port, and a sump drain. The filler port and sump drain are accessed by opening the baggage door. The tank mounts on a separate fiberglass tray which is also removable.

The pump transfers fuel to the main tank at approximately 40 gallons per hour (150 liters per hour). Venting is provided through a second hose connected to the main tank. If the main tank is full, any excess fuel transferred by the pump returns to the auxiliary tank through the vent hose.

A fuel flow sensor is located at the fitting where transferred auxiliary fuel enters the main tank (hose connection near the main tank filler port). The sensor illuminates the NO FLOW light on the control panel when the pump switch is on but the fuel transfer rate is less than ten gallons per hour.

The AUX FUEL control panel on the console includes a pump switch, a NO FLOW annunciator light, and a QUANTITY button. The pump switch engages the transfer pump. When the pump switch is on, the NO FLOW light indicates fuel is not transferring from auxiliary tank to the main tank, either because the auxiliary tank is empty or the pump has failed. It is normal for the light to illuminate for approximately five seconds when the pump is first switched on while the system is priming.

A time-delay circuit automatically switches the pump off if the NO FLOW light is illuminated for more than ten seconds. The light will remain on even after the time delay has removed power from the pump. Turning the pump switch off will extinguish the light.

While the QUANTITY button is depressed, the fuel quantity gage indicates fuel quantity in the auxiliary tank instead of the main tank. The NO FLOW light also comes on while the QUANTITY button is depressed to provide a test of the circuit and to confirm that the auxiliary tank quantity is being displayed on the fuel gage.

The auxiliary fuel tank has two drains through the belly of the helicopter. Any fuel spilled at the filler port is collected by the surrounding scupper and drains through a hose into the outboard belly drain location. The tank support tray has a drain at the inboard drain location. Fuel leaking from the inboard drain indicates a possible leak in the fuel bladder.

A sump drain hose stowed vertically along the right side of the tank allows preflight fuel sampling from the low point of the tank. To sample fuel, extend hose away from the helicopter and push in on the valve. The valve may be locked open to allow draining of the tank.

28-50 Aux Fuel System (continued)

A. Description (continued)

Operationally, the fuel transfer pump may be switched on any time at the pilot's discretion. If the main tank is full, any excess fuel transferred from the auxiliary tank will return through the vent/return hose. Note that fuel in the auxiliary tank is not considered usable for flight planning purposes because the fuel transfer system has no redundancy in case of pump failure.

The auxiliary fuel tank may be removed to provide additional baggage space. The separate support tray may also be removed. A small container which may be clipped to the outboard side of the tank is provided for stowing installation hardware.

28-51 Aux Fuel System – Tank Assembly

A. Removal

1. Defuel aux fuel tank per § 12-42.
2. Turn battery switch off and pull out (5 amp) AUX FUEL PUMP circuit breaker at panel. Open main baggage compartment door.
3. Disconnect G768-4 harness assembly from airframe harness at connectors.
4. Using a back-up wrench, disconnect D205-36 (vent/return) and D205-36 (pump) hose assemblies from aux tank fittings in G759-1 cover assembly. Install AN820-6 or AN929-6 caps (included in MT183-1 kit) on aux tank fittings. Install AN806-6D plugs (included in MT183-1 kit) on hose fittings, special torque plugs to 120 in.-lb, and stow hoses in G769-1 bracket assembly.
5. Remove (8) B526-6 screws securing G010-2 aux tank assembly to G259-1 bulkhead and G251-1 panel. Remove tank assembly using straps.

> NOTE
>
> Flight is permissible without G010-2 aux tank assembly installed when (2) AN806-6D plugs installed on D205-36 hose assemblies and hoses are stowed in G769-1 bracket assembly (see above instructions).

6. As required, revise Weight and Balance Record in R66 Pilot's Operating Handbook (POH) Section 6 to reflect aux tank assembly removal using the following data:

Subtract:

Item	Weight	Long. Arm	Long. Moment	Lat. Arm	Lat. Moment
Aux Tank Assy	–30.0 lb	101.0 in.	–3030 in.-lb	1.5 in.	–45.0 in.-lb

28-51 Aux Fuel System – Tank Assembly (continued)

B. Installation

1. Turn battery switch off and pull out (5 amp) AUX FUEL PUMP circuit breaker at panel. Open main baggage compartment door.
2. Position G010-2 aux tank assembly on G755-1 support assembly (tank pin will align with relief in support); route drain tube into floor weldment. Install (8) B526-6 screws securing aux tank to G259-1 bulkhead and G251-1 panel. Verify security.
3. Remove AN820-6 or AN929-6 caps from aux tank fittings in G759-1 cover assembly, and AN806-6D plugs from D205-36 (vent/return) and D205-36 (pump) hose assemblies. Stow caps and plugs in MT183-1 kit's jar assembly.
4. Connect hose assemblies to aux tank fittings. Using a back-up wrench on fittings, special torque hose nuts per § 20-33, & torque stripe per Figure 5-1. Verify security.
5. Connect G768-4 harness assembly to airframe harness at connectors. Verify security.
6. As required, revise Weight and Balance Record in R66 Pilot's Operating Handbook (POH) Section 6 to reflect aux tank assembly installation using the following data:

   Add:

Item	Weight	Long. Arm	Long. Moment	Lat. Arm	Lat. Moment
Aux Tank Assy	30.0 lb	101.0 in.	3030 in.-lb	1.5 in.	45.0 in.-lb

7. Fuel as required per § 12-41.
8. Turn battery switch on and push in (5 amp) AUX FUEL PUMP circuit breaker at panel. Turn pump switch on and inspect vent/return, pump, and sump drain hose assemblies where they connect to tank. Verify no fuel leaks.
9. Turn pump and battery switches off. Close and secure main baggage compartment door.

28-52 Aux Fuel System – Support Assembly

A. Removal

1. Remove aux fuel tank per § 28-51.
2. Remove (6) B526-6 screws securing G755-1 support assembly to bulkhead and remove (7) B536-8 screws securing support assembly to floor. Carefully remove support.

> NOTE
>
> Flight is permissible without G010-2 aux tank assembly installed when (2) AN806-6D plugs installed on D205-36 hose assemblies and hoses are stowed in G769-1 bracket assembly (refer to § 28-51). G755-1 support assembly installation is optional when tank is removed.

3. As required, revise Weight and Balance Record in R66 Pilot's Operating Handbook (POH) Section 6 to reflect support assembly removal using the following data:

Subtract:

Item	Weight	Long. Arm	Long. Moment	Lat. Arm	Lat. Moment
Support Assy	–3.0 lb	101.0 in.	–303 in.-lb	–1.2 in.	54.0 in.-lb

B. Installation

1. Verify baggage compartment floor where G755-1 support assembly is to be installed is free of debris. Position support assembly on floor.
2. Install (6) B526-6 screws securing support assembly to bulkhead and install (7) B536-8 screws securing support assembly to floor. Verify security.
3. As required, revise Weight and Balance Record in R66 Pilot's Operating Handbook (POH) Section 6 to reflect support assembly installation using the following data:

Add:

Item	Weight	Long. Arm	Long. Moment	Lat. Arm	Lat. Moment
Support Assy	3.0 lb	101.0 in.	303 in.-lb	–1.2 in.	–54.0 in.-lb

4. Install aux fuel tank per § 28-51 or refer to NOTE in Part A.

28-53 Aux Fuel System – Bladder

CAUTION

Avoid contaminating bladder interior. Cover arms with sleeves and use lint-free gloves when working inside bladder.

A. Removal

1. Remove aux fuel tank per § 28-51.
2. Cut ty-rap securing D205-35 (drain) hose assembly to G762-11 scupper. Using a back-up wrench, disconnect hose from drain fitting, release hose at tab, and remove hose. Cap and plug fittings. Remove screws securing G756-1 bladder and scupper to G754-1 enclosure assembly.
3. Remove fuel quantity sender per § 28-21.
4. Remove screws securing G759-1 cover assembly and bladder to enclosure. Lift cover and inside bladder, release clamp securing drain tube to fitting. Inside bladder, remove screws securing G764-1 drain weldment and G765-1 pump assembly to bladder. Remove weldment, pump, and tubes with connected cover assembly.
5. Remove screws securing G758-1 cover to enclosure assembly. Remove G762-12 hinge. Guide cover clear of strap and remove cover.
6. Detach bladder hook tape from enclosure loop tape and remove bladder. Tape bladder openings.

B. Installation

1. Fold forward, aft, and left sides of G756-1 bladder inward; align bladder's G759-4 ring assembly with G754-1 enclosure assembly's servicing panel to clear strap, and press bottom of bladder to enclosure's tray. Unfold bladder, and align bladder and enclosure hook and loop tape.

CAUTION

Verify bladder is free of wrinkles across lower surface and properly located before attaching hook and loop tape. Bladder may be pressurized with air to 1 psi max to assist installation.

2. Remove tape protecting bladder openings. Insert a clean, smooth, blunt wooden dowel through bladder service opening and press on bladder lower surface to attach hook and loop tape. Verify security.
3. Guide G758-1 cover clear of strap and install screws securing cover to enclosure. Install G762-12 hinge. Verify security.

28-53 Aux Fuel System – Bladder (continued)

B. Installation (continued)

4. Position G765-1 pump assembly, G764-1 drain weldment, and tubes (with connected G759-1 cover assembly) inside bladder and install screws. Verify security.
5. Inside bladder, install clamp securing drain tube to fitting. Verify security.
6. Install screws securing bladder and G762-11 scupper to enclosure at drain. Verify security.
7. Connect D205-35 (drain) hose assembly to drain fitting, aligning hose 8.5° ± 5.0° from parallel with edge of enclosure's G757-1 tray. Using a back-up wrench, special torque hose nut per § 20-33, and torque stripe per Figure 5-1. Secure hose near drain valve at tab. Install MS336-7-9 ty-rap securing scupper to hose. Cinch ty-rap until snug without overtightening, and trim tip flush with head.
8. Apply light coat A257-9 anti-seize to screw threads and install screws securing G759-1 cover and bladder to enclosure. Verify security.
9. Install fuel quantity sender per § 28-21.
10. Install aux fuel tank per § 28-51.

Intentionally Blank

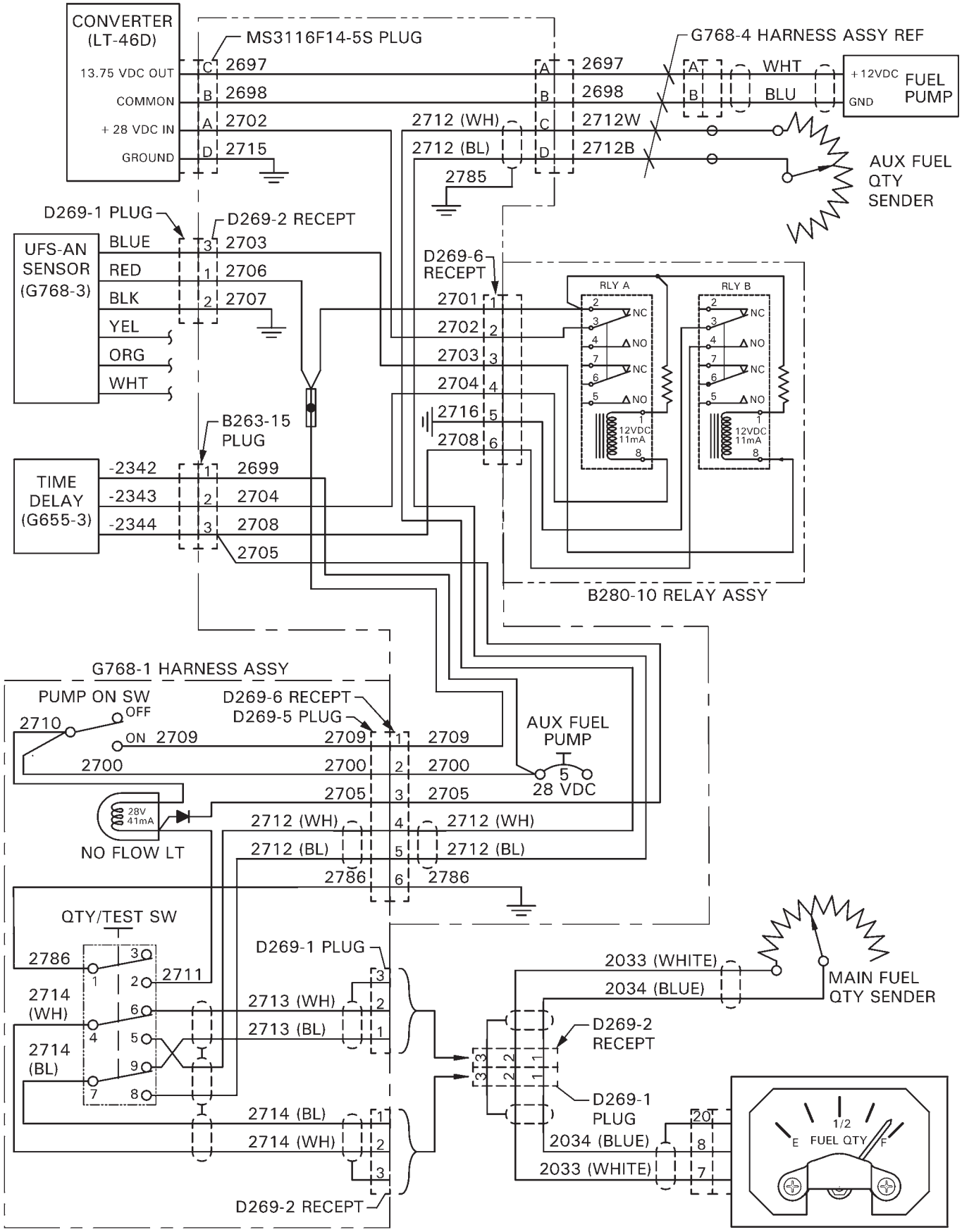

FIGURE 28-5 AUX FUEL SYSTEM ELECTRICAL SCHEMATIC

28-54 Aux Fuel System – Fuel Quantity Sender

Refer to § 28-21 for fuel quantity sender maintenance instructions.

28-55 Aux Fuel System – Pump Assembly

CAUTION

Avoid contaminating bladder interior. Cover arms with sleeves and use lint-free gloves when working inside bladder.

A. Removal

1. Defuel aux fuel tank per § 12-42.
2. Turn battery switch off and pull out (5 amp) AUX FUEL PUMP circuit breaker at panel. Open main baggage compartment door.
3. Disconnect G768-4 harness assembly from G768-1 harness assembly at connectors.
4. Using a back-up wrench, disconnect D205-36 (vent/return) and D205-36 (supply) hose assemblies from aux tank fittings in G759-1 cover assembly. Temporarily cap and plug fittings (AN820-6 and AN929-6 caps, and AN806-6D plugs are included in MT183-1 kit).
5. Remove screws securing G759-1 cover assembly and G756-1 bladder to G754-1 enclosure assembly. Lift cover and inside bladder, release clamp securing drain tube to fitting. Inside bladder, remove screws securing G764-1 drain weldment and G765-1 pump assembly to bladder. Remove weldment, pump, and tubes with connected cover assembly. Tape opening to prevent contamination of bladder interior.
6. Remove weldment. Unwind B161-108 spirap, removing spirap from pump wiring. Remove two D277-8 clamps securing A729-74 tube to pump and cover and remove tube. Unplug pump from cover at connectors.

28-55 Aux Fuel System – Pump Assembly (continued)

B. Installation

1. Turn battery switch off and pull out (5 amp) AUX FUEL PUMP circuit breaker at panel. Open main baggage compartment door.
2. Position G010-2 aux tank assembly on G755-1 support assembly (tank pin will align with relief in support); route drain tube into floor weldment. Install (8) B526-6 screws securing aux tank to G259-1 bulkhead and G251-1 panel. Verify security.
3. Remove AN820-6 or AN929-6 caps from aux tank fittings in G759-1 cover assembly, and AN806-6D plugs from D205-36 (vent/return) and D205-36 (supply) hose assemblies. Stow caps and plugs in MT183-1 kit's jar assembly.
4. Connect hose assemblies to aux tank fittings. Using a back-up wrench on fittings, special torque hose nuts per § 20-33, and torque stripe per Figure 5-1. Verify security.
5. Connect G768-4 harness assembly to G768-1 harness assembly at connectors. Verify security.

CHAPTER 29

HYDRAULICS

Section	Title	Page
29-00	Description	29.1
29-10	Hydraulic Pump	29.1
29-20	Hydraulic Reservoir	29.5
29-30	Hydraulic Servos	29.6

Intentionally Blank

CHAPTER 29

HYDRAULICS

29-00 Description

WARNING

Except as instructed in this manual, service on the hydraulic system is limited to component removal and replacement.

CAUTION

Cleanliness of hydraulic fluid is vital to proper system operation. Use only clean fluid from sealed containers and avoid contamination from dirty funnels, tubing, etc. Use LPS PreSolve to clean hydraulic parts. Do not use alcohol.

Hydraulically boosted main rotor flight controls eliminate cyclic and collective feedback forces. The hydraulic system consists of a pump, three servos, a reservoir, and interconnecting lines. Normal operating pressure is 450 to 500 psi. The pump is mounted on and driven by the main rotor gearbox. A servo is connected to each of the three push-pull tubes that support the main rotor swashplate. The reservoir is mounted to the aft end of the main rotor gearbox and includes a filter, pressure relief valve, and pilot-controlled pressure shut-off valve.

A sight glass for pre-flight fluid level checks is incorporated in the reservoir and accessible via a left side cowl door. A vented filler cap is located on top of the reservoir.

The pressure shut-off valve is solenoid-actuated and controlled by the hydraulic switch on the pilot's cyclic. The switch should be left on during helicopter shutdown and start up except during the hydraulic system check.

Electrical power is required to turn off hydraulics. Pulling HYD circuit breaker will NOT turn off hydraulics but will disable hydraulic switch.

29-10 Hydraulic Pump

A. Removal

1. Remove tailcone cowling per § 53-23.
2. For helicopters with air conditioning:
   a. Loosen hardware securing G777-1 compressor assembly to G781-1 arm weldment.

CAUTION

Do not use refrigerant hose assemblies or fittings to rotate compressor. Do not rotate compressor further than necessary, to avoid damaging system wiring and refrigerant hoses or fittings.

   b. Rotate compressor down and inboard as required to disengage B173-5 v-belt from pulleys.

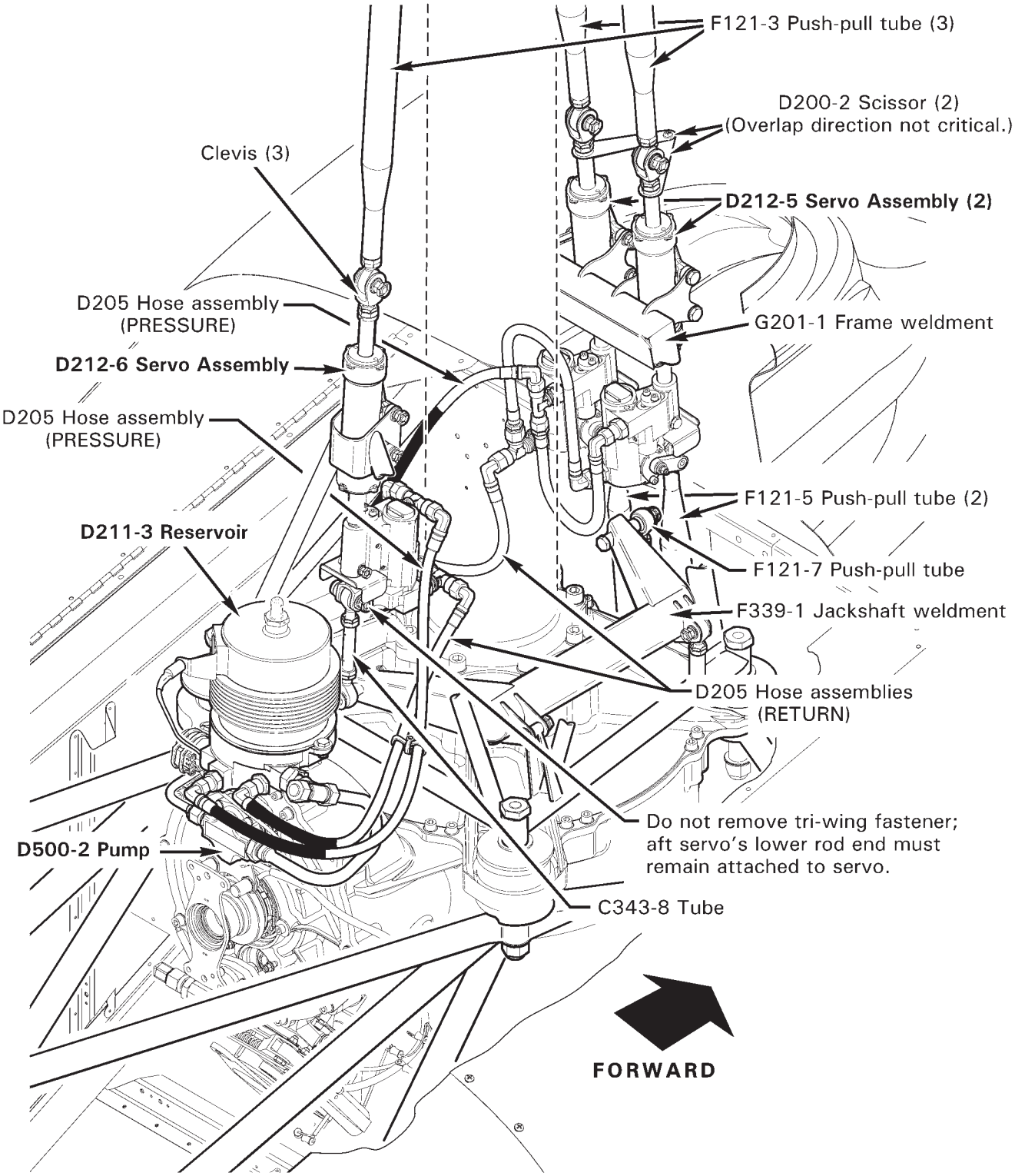

FIGURE 29-1 HYDRAULIC FLIGHT CONTROL SYSTEM

29-10 Hydraulic Pump (continued)

A. Removal (continued)

2. c. Remove hardware securing G779-1 pulley to F908-1 yoke assembly and slide pulley aft (do not scuff paint on tail rotor drive fan shaft).

3. Remove hydraulic reservoir filler-vent and temporarily install an air-tight plug.

4. Refer to Figure 12-4. Remove F902 suction line assembly and protect exposed line and fitting openings.

5. Remove F902 pressure line assembly and protect exposed line and fitting openings.

6. Remove aft jam nut from both MR rpm senders and remove both senders from bracket attached to hydraulic pump. Temporarily secure senders away from drive train to prevent damage.

7. Remove four self-locking nuts and washers securing pump to gearbox and remove pump and o-ring. Discard o-ring. Protect pump opening on gearbox.

B. Installation

1. Prelubricate new o-ring with gearbox oil and install on pump mounting flange. With pump bracket pointing down, install pump on gearbox and secure. Special torque nuts per § 20-33.

2. Install both MR rpm senders in pump bracket. Adjust clearance between both senders and both yoke magnets to 0.040/0.020 inch and hand-tighten sender jam nuts.

3. Refer to Figure 12-4. Install F902 pressure line assembly and special torque per § 20-33.

4. Install F902 suction line assembly and special torque per § 20-33.

5. Remove temporary air-tight plug from reservoir and adjust fluid level as required. Install filler-vent and special torque per § 20-33.

6. Torque stripe jam nuts and B-nuts.

7. Bleed hydraulic system per § 12-34.

8. Install a 110-4 Telatemp on aft surface of pump.

9. For helicopters with air conditioning:

   a. Position G779-1 pulley on F908-1 yoke assembly. Install hardware, standard torque nuts per § 20-32, and torque stripe per Figure 5-1.

   b. Route B173-5 v-belt onto pulleys. Rotate compressor up and outboard to tension belt, then tighten hardware securing compressor to weldment. Adjust belt until 4.5-5.5 lb of force applied mid-span deflect belt 0.16-inch. Standard torque bolts per § 20-32 and torque stripe per Figure 5-1.

10. Install tailcone cowling per § 53-23.

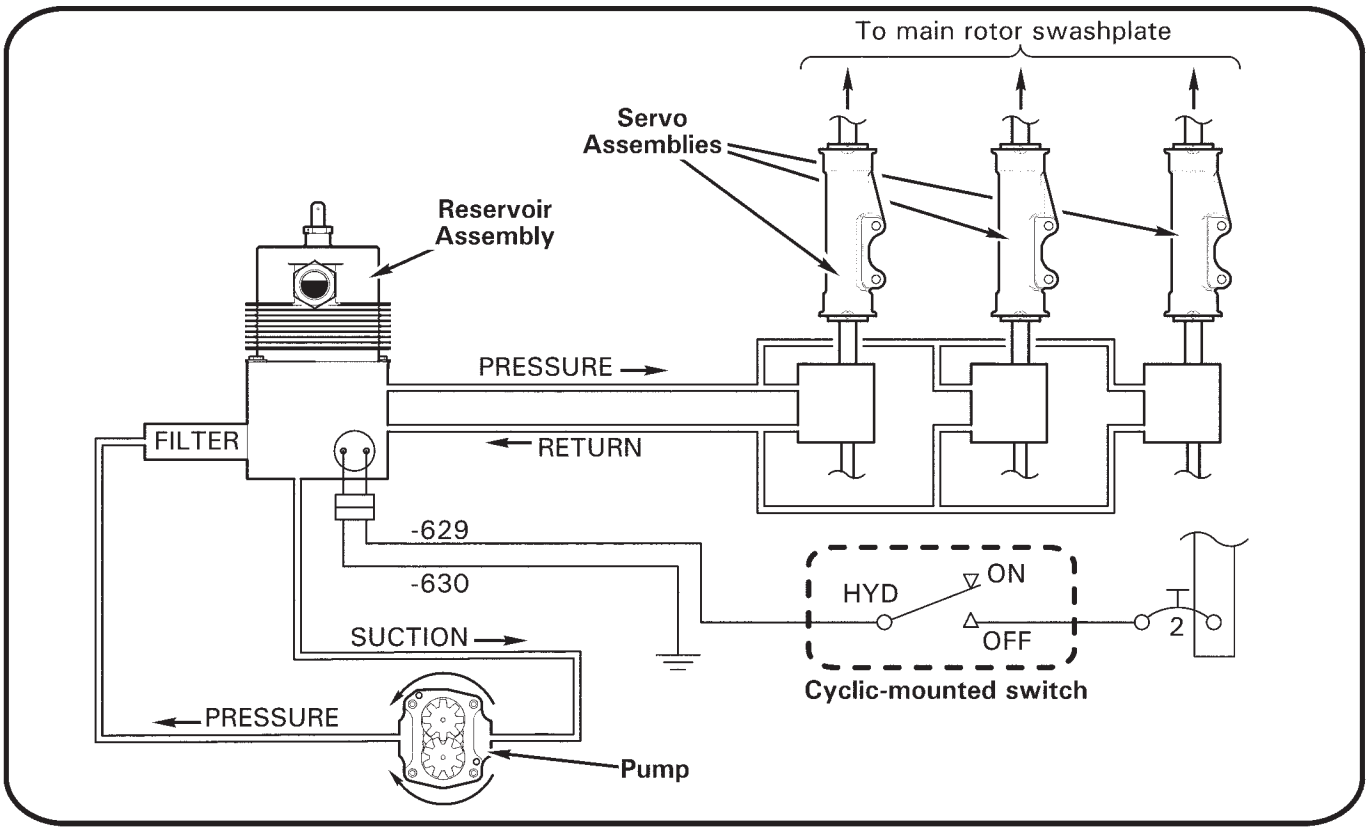

FIGURE 67-3A HYDRAULIC SYSTEM SCHEMATIC

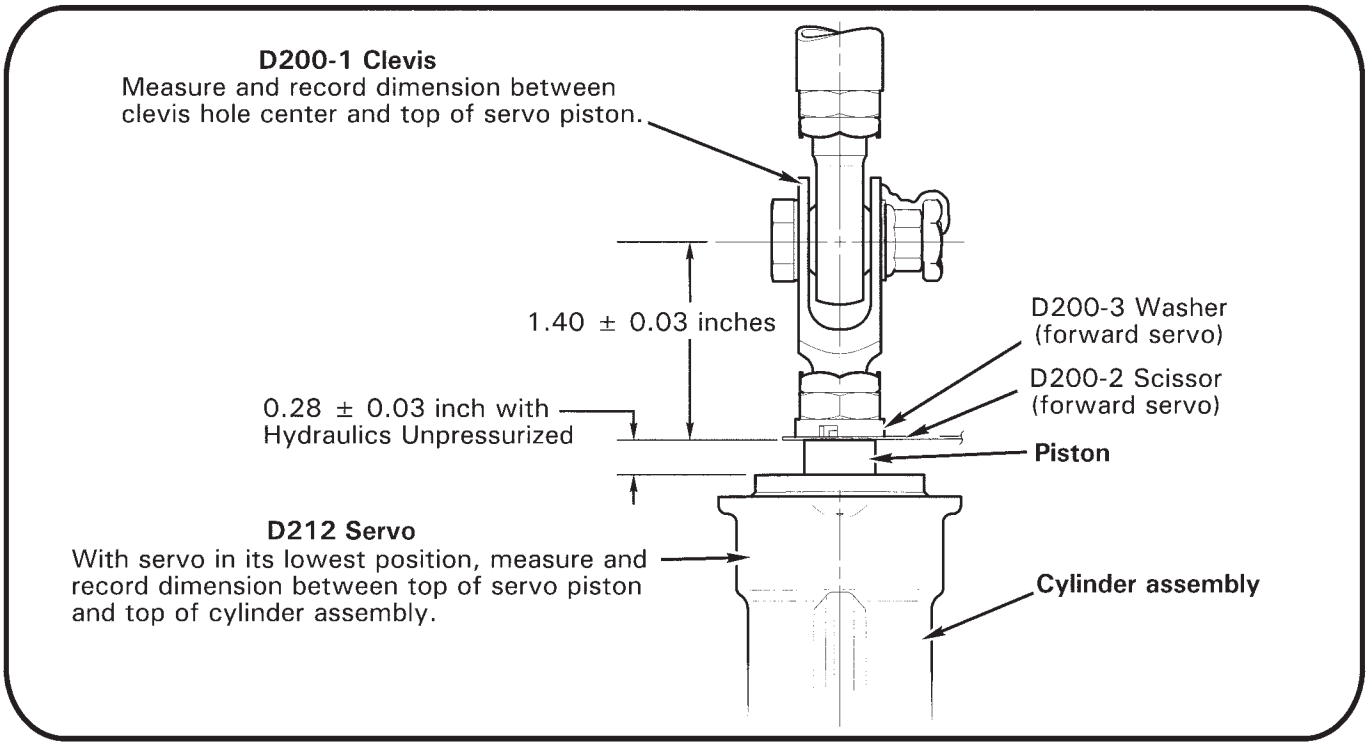

FIGURE 67-3B HYDRAULIC SERVO RIGGING

29-20 Hydraulic Reservoir

A. Removal

1. Temporarily install a "DO NOT MOVE FLIGHT CONTROLS" sign in cockpit.
2. Remove tailcone cowling per § 53-23.
3. Place a one-liter container beneath suction tee fitting on reservoir. Remove cap from tee fitting and allow reservoir fluid to drain into container. Reinstall cap and special torque per § 20-33.
4. Remove suction and pressure lines, and disconnect and cap servo supply and return hoses, from reservoir. Protect line and fitting openings.
5. Disconnect pump bypass solenoid and sight gage LED electrical connectors.
6. Remove three screws securing reservoir to gearbox and remove reservoir.
7. Note alignment of tee fittings and sight gage LED. Transfer LED and line and hose fittings from removed reservoir to replacement reservoir.

B. Installation

1. Note alignment of tee fittings and sight gage LED on removed reservoir. Transfer LED and line and hose fittings from removed reservoir to replacement reservoir. Special torque fittings per § 20-33.
2. Install reservoir on gearbox and secure with three screws.
3. Install pressure and suction lines, repositioning tee fittings as required, and special torque per § 20-33.
4. Connect servo supply and return hoses to reservoir. Position hose elbows to minimize preload and special torque per § 20-33.
5. Connect pump bypass solenoid and sight gage LED electrical connectors and ty-rap wires as required.
6. Fill reservoir with A257-15 hydraulic fluid and special torque filler vent per § 20-33.
7. Bleed hydraulic system per § 12-34.
8. Install tailcone cowling per § 53-23.

29-30 Hydraulic Servos

A. Servo Removal

CAUTION

Do not pressurize hydraulic system while any hydraulic system component is disconnected or removed.

1. Remove mast fairing per § 53-22. Remove tailcone cowling per § 53-23.
2. Refer to Figures 29-1 and 29-3. Perform the following measurements on all D212 hydraulic servo assemblies to be removed:
   a. Measure and record dimension between D200-1 clevis hole center & top of servo piston.
   b. Apply cyclic and collective frictions. With collective full down and hydraulics unpressurized, position cyclic stick so piston in servo to be removed is in its lowest position. Measure and record dimension between top of servo piston and top of cylinder assembly.
3. Remove hardware securing servo clevis to F121-3 push-pull tube's lower rod end.
4. a. Forward Servo: Remove hardware securing servo to F121-5 push-pull tube's upper rod end. Remove hardware joining D200-2 scissors.
   b. Aft Servo: Remove hardware securing C343-8 tube's lower rod end to F339-1 jackshaft weldment.
5. Disconnect D205 hose assemblies from servo unions and tees. Cap and plug fittings.
6. Remove hardware securing servo to G201-1 frame weldment and remove servo.
7. Aft Servo: Measure and record center-to-center dimension between aft servo's lower rod end and C343-8 tube's lower rod end. Loosen palnut and nut securing C343-8 tube to aft servo's lower rod end and remove tube.

CAUTION

Do not remove tri-wing fastener; aft servo's lower rod end must remain attached to servo.

CAUTION

Dimension between clevis hole center and top of servo piston must be 1.40 ± 0.03 inches; dimension between top of servo piston and top of cylinder assembly must be 0.28 ± 0.03 inch; dimension between C343-8 tube's rod ends must be 4.00 ± 0.03 inches. If dimension(s) are not within required range, perform main rotor rigging per § 18-40 after servo installation.

8. Remove clevis, scissor, D200-3 washer, unions, and tee fittings from servo, as applicable.
9. Actuate servo piston by hand and drain as much hydraulic fluid from servo as possible. Plug servo ports.

29-30 Hydraulic Servos (continued)

B. Servo Installation

CAUTION

Do not pressurize hydraulic system while any hydraulic system component is disconnected or removed.

CAUTION

Refer to Part A. Dimension between clevis hole center and top of servo piston must be 1.40 ± 0.03 inches; dimension between top of servo piston and top of cylinder assembly must be 0.28 ± 0.03 inch; dimension between C343-8 tube's rod ends must be 4.00 ± 0.03 inches. If dimension(s) recorded during servo removal were not within required range, or if dimension(s) are unknown, adjust to correct dimensions in Part B steps 1 and 2, proceed with servo installation thru step 10, then perform main rotor rigging per § 18-40.

1. Refer to Figures 67-2 and 67-3B. Lightly coat D200-1 clevis threads with B270-21 protectant. Assemble clevis, palnut, nut, D200-3 washer (forward servo), and D200-2 scissor (forward servo), and install assembly in D212 hydraulic servo assembly piston. Adjust dimension between clevis hole center & top of servo piston to dimension recorded during servo removal, then tighten jam nut and palnut finger tight.

2. Aft Servo: Lightly coat servo's lower rod end threads with B270-21 protectant and install C343-8 tube. Adjust tube on servo's rod end, and tube's rod end, to the center-to-center dimension (between rod ends) recorded during servo removal, and with rod ends 90° to each other. Tighten jam nuts and palnuts finger tight.

CAUTION

Do not remove tri-wing fastener; aft servo's lower rod end must remain attached to servo.

3. Install hardware securing servo to G201-1 frame weldment. Standard torque fasteners per § 20-32 and torque stripe per Figure 5-1.

4. Forward Servos: Install hardware joining scissors (scissor overlap direction not critical); special torque nut to 25 in.-lb, special torque palnut to 5-10 in.-lb, and torque stripe per Figure 5-1.

5. Using backup wrench, align clevis parallel with helicopter's longitudinal axis, standard torque jam nut and palnut per § 20-32, and torque stripe per Figure 5-1.

6. Install hardware securing servo clevis to F121-3 push-pull tube's lower rod end. Standard torque fastener per § 20-32 and torque stripe per Figure 5-1.

29-30 Hydraulic Servos (continued)

B. Servo Installation (continued)

7. a. Forward Servo: Install hardware securing servo to F121-5 push-pull tube's upper rod end. Standard torque fastener per § 20-32 and torque stripe per Figure 5-1.

   b. Aft Servo: Install hardware securing C343-8 tube's lower rod end to F339-1 jackshaft weldment. Standard torque fastener per § 20-32 and torque stripe per Figure 5-1. Using backup wrench, standard torque jam nuts and palnuts, and torque stripe per Figure 5-1.

8. Refer to Figure 5-2. Verify proper rod end centering on all push-pull tubes attached to servos.

9. Remove caps and plugs. Lubricate new packings using A257-15 hydraulic fluid and install packings on servo unions and tees. Install fittings with associated hardware in servo ports and connect D205 hose assemblies to fittings. Align fittings to minimize hose preload and ensure hose clearance with surrounding structure; special torque fittings per § 20-33 and torque stripe per Figure 5-1. Special torque hose B-nuts per § 20-33 and torque stripe per Figure 5-1.

10. Bleed hydraulic system per § 12-34.

11. Perform the following measurements on all servos just installed:

    a. Measure and record dimension between clevis hole center & top of servo piston.

    b. Apply cyclic and collective frictions. With collective full down and hydraulics unpressurized, position cyclic stick so piston in servo just installed is in its lowest position. Measure and record dimension between top of servo piston and top of cylinder assembly.

CAUTION

Dimension between clevis hole center and top of servo piston must be 1.40 ± 0.03 inches; dimension between top of servo piston and top of cylinder assembly must be 0.28 ± 0.03 inch; dimension between C343-8 tube's rod ends must be 4.00 ± 0.03 inches. If dimension(s) recorded are not within required range, adjust to correct dimensions in Part B steps 1 and 2, proceed with servo installation thru step 10, then perform main rotor rigging per § 18-40.

12. Install tailcone cowling per § 53-23. Install mast fairing per § 53-22.

CHAPTER 32

LANDING GEAR

Section	Title	Page
32-00	Description	32.1
32-10	Landing Gear Assembly	32.1
32-20	Cross Tubes	32.5
32-30	Skid Tubes	32.7
	32-31 Skid Shoes	32.8
	32-32 Skid Extension Replacement	32.8
	32-33 Ground Handling Wheel Support Replacement	32.8
32-40	Fairing Assemblies	32.9
32-50	Maintenance	32.9
32-60	Pop-Out Floats Installation	32.11
	32-61 Cylinder Assembly	32.11
	32-62 Lever Rigging and Shear-Rivet Replacement	32.17
	32-63 Float Installation	32.19
	32-64 System Maintenance	32.22

Intentionally Blank

CHAPTER 32

LANDING GEAR

32-00 Description

A spring and yield skid type landing gear is used. Most hard landings will be absorbed elastically. However, in an extremely hard landing, the struts will hinge up and outward as the center crosstube yields (takes permanent set) to absorb the impact. Slight yielding of the aft crosstube is acceptable. For tail skid height limitation, see § 32-20. For hard landing inspection, see § 5-65.

Hardened steel wear shoes are mounted on the bottom of the skids. Inspect skid tubes and skid shoes per § 32-30, particularly if autorotation landings with ground contact have been performed.

Pop-out float landing gear is available as optional equipment. See § 32-60 for pop-out float installation description.

32-10 Landing Gear Assembly

A. Removal

1. Open cabin aft doors and baggage compartment door. Remove engine cowling per § 53-21.

2. Refer to § 6-70; remove G308-2 and two F475-6 cross tube covers. Remove fairing assemblies per § 32-40.

3. Refer to Figure 32-1. If installed, remove hardware securing A936-3 (ground) wire assembly to aft, right landing gear attachment.

4. Using putty knife or plastic scraper, cut sealant securing four cross tube rain caps to landing gear assembly and remove caps. Remove sealant residue from caps, cross tubes, and strut assemblies. Clean surfaces with solvent.

5. Hoist helicopter per § 7-20. Raise skids above ground approximately one foot.

CAUTION

Support landing gear assembly as mounting bolts are removed. Do not damage forward cross tube hinged inspection cover.

6. Remove hardware securing forward, right strut assembly & forward cross tube to fuselage support. Mounting bolt access hole is located on aft, right seat box forward wall.

7. Remove hardware securing aft, right strut assembly & aft cross tube to fuselage support. Mounting bolt access hole is located on baggage compartment aft wall.

8. Rotate forward, left shackle to align mounting bolt with access hole on aft, left seat box forward wall. Remove hardware securing landing gear to shackle.

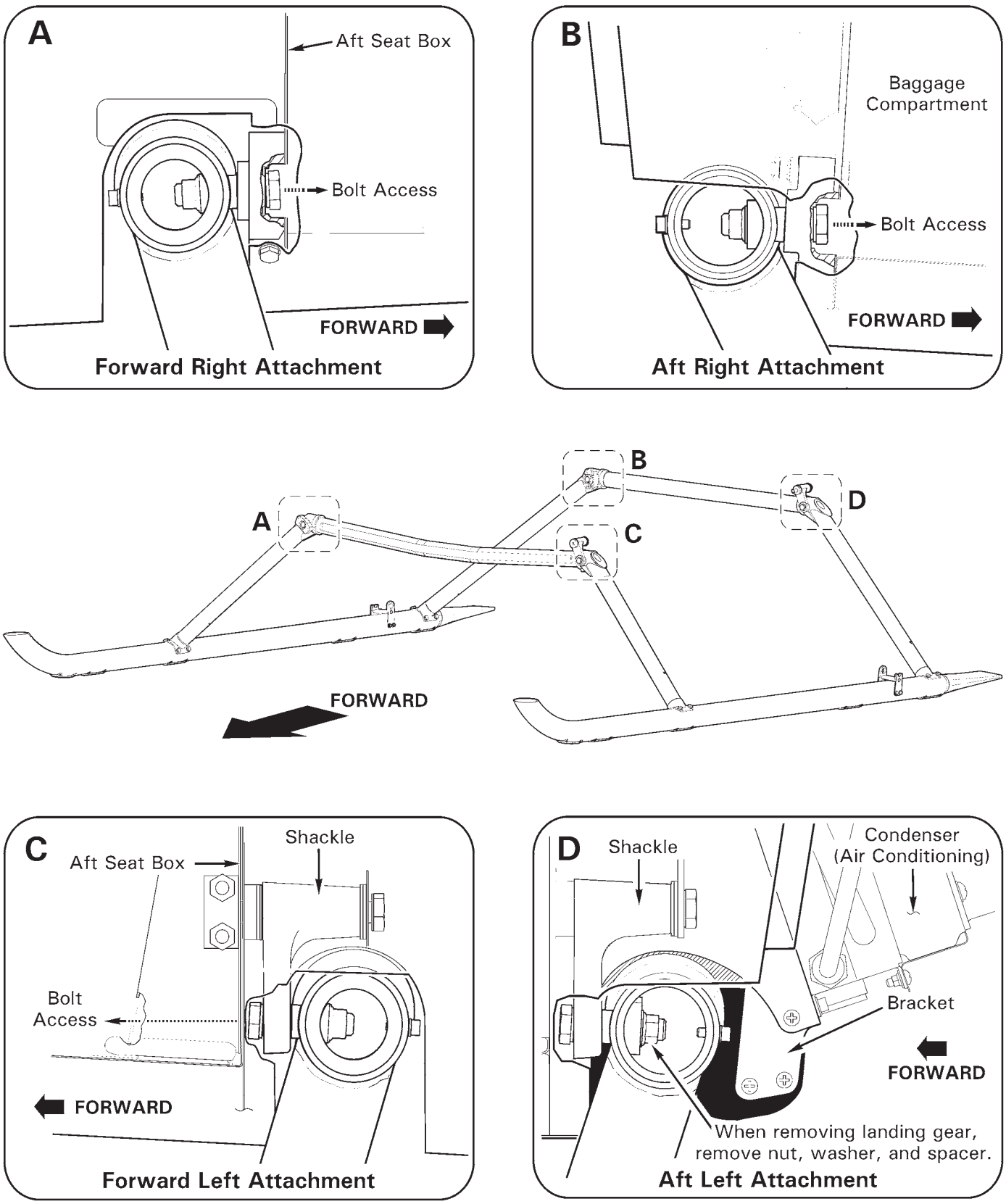

FIGURE 32-1 LANDING GEAR ATTACHMENT

32-10 Landing Gear Assembly (continued)

A. Removal (continued)

9. If air conditioning is installed, remove hardware securing G787-3 and G787-4 brackets to condenser support and remove brackets.

10. Remove nut, washer, and spacer from aft, left mounting bolt (bolt stays in place). Carefully lower forward cross tube below belly, then move assembly aft, off of aft left bolt.

B. Installation

WARNING

Landing gear mounting bolts are critical fasteners. See § 20-30 for torque requirements.

CAUTION

Support landing gear assembly as mounting bolts are installed. Do not damage forward cross tube hinged inspection cover.

1. Hoist helicopter per § 7-20 to required height.

2. Refer to Figure 32-1. Align mounting bolt (in place) with aft, left landing gear attachment. Install hardware, special torque fastener per § 20-33, & torque stripe per Figure 5-1. If air conditioning is installed, install hardware securing G787-3 and G787-4 brackets to condenser support. Verify security.

3. Insert hardware thru access hole on aft, left seat box forward wall, and thru shackle. Align mounting bolt with forward, left landing gear attachment. Install hardware, special torque bolt per § 20-33, & torque stripe per Figure 5-1.

4. Insert hardware thru right side access hole on baggage compartment aft wall and aft, right landing gear attachment. Install hardware, special torque bolt per § 20-33, & torque stripe per Figure 5-1.

5. Insert hardware thru access hole on aft, right seat box forward wall and forward, right landing gear attachment. Install hardware, special torque bolt per § 20-33, & torque stripe per Figure 5-1.

6. Lower helicopter per § 7-20. Close cabin aft doors and baggage compartment door.

7. If installed, verify surface under terminal is clean and dry and install hardware securing A936-3 (ground) wire assembly to aft, right landing gear attachment. Standard torque screw per § 20-32 and torque stripe per Figure 5-1.

8. Verify rain caps and bonding surfaces are clean and dry. Bond caps to landing gear cross tubes (painted side against cross tube, window up) using B270-1 sealant. Remove excess adhesive and allow to cure.

32-10 Landing Gear Assembly (continued)

B. Installation

9. Refinish landing gear as required per Chapter 20.

10. When surfaces are dry, install engine cowling per § 53-21. Refer to § 6-70; install G308-2 and two F475-6 cross tube covers. Install fairing assemblies per § 32-40.

11. Perform electrical bond check per the following:

    a. Remove aux fuel tank per § 28-51, if installed.

    b. Disconnect battery negative (ground) cable, then positive cable from battery.

    c. Attach positive (red) and negative (black) leads to digital milliohm meter (Model 310, BK Precision or similar).

    d. Attach negative (black) leads to battery ground strap; attach positive (red) leads to the following ground locations and check readings:

        i. Tailcone forward bay (strobe light ground stud)

        ii. Horizontal stabilizer (tail light ground stud)

        iii. Main gearbox (chip detector housing or MR temperature switch screw)

        iv. Left and right skid tube (ground handling support)

        v. Avionics ground (C448 terminal assembly)

        vi. Upper console ground (G050/G060)

        vii. Battery charge negative post

    e. Verify resistance at each location is maximum 1 ohm; if more than 1 ohm, check installation points and repeat steps as required.

Intentionally Blank

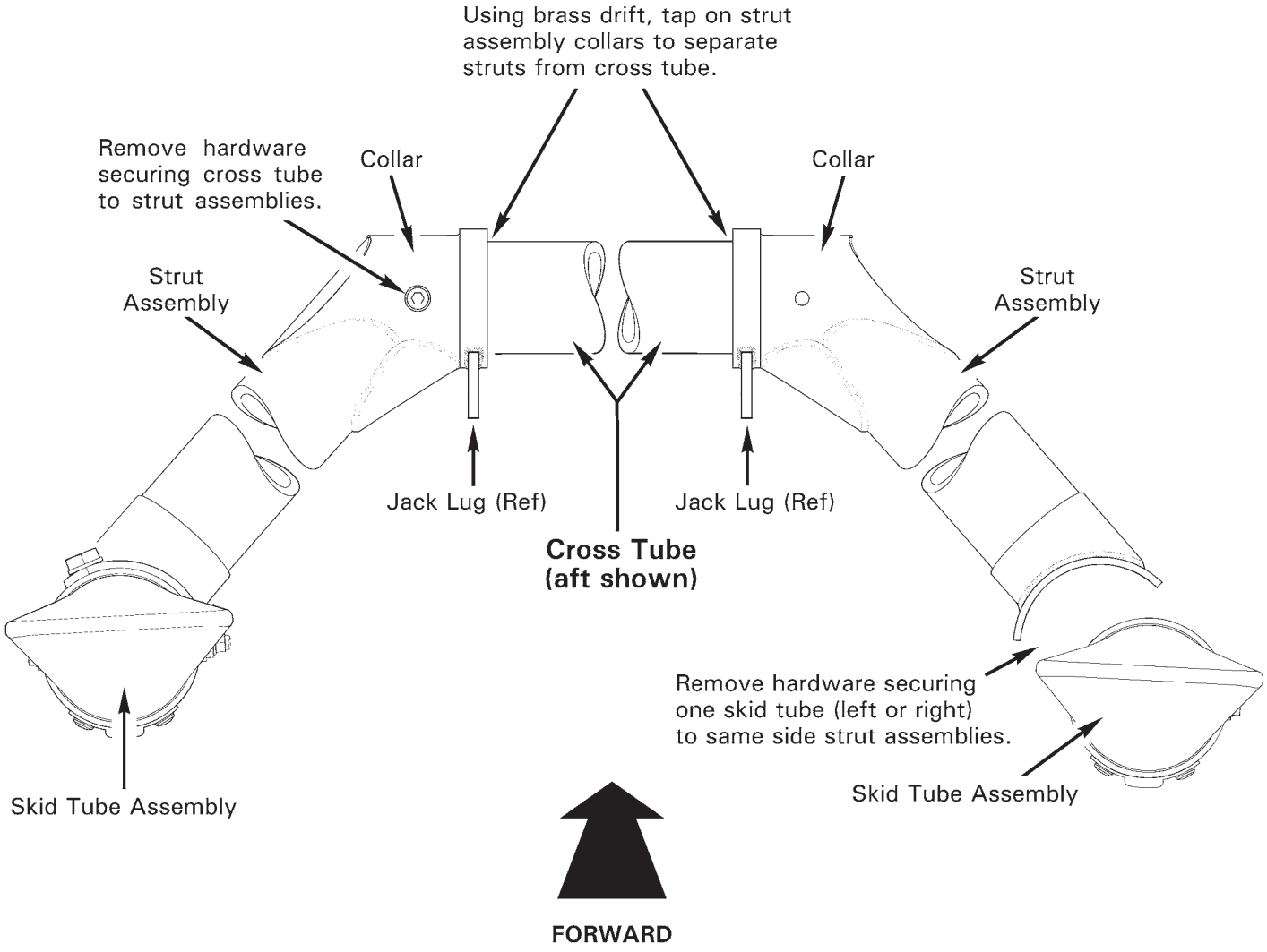

FIGURE 32-2 CROSS TUBE REMOVAL

32-20 Cross Tubes

A. Inspection

For helicopters with F014-1 (standard) landing gear or F014-4 (pop-out float) landing gear, replace aft cross tube if tail skid height is less than 38 inches from ground when aircraft is minimally loaded on level pavement.

For helicopters with F014-5 (extended) landing gear, replace aft cross tube if tail skid height is less than 30 inches from ground when aircraft is minimally loaded on level pavement.

For hard landing inspection, see Section 5-65.

B. Removal

1. Remove landing gear per Section 32-10.
2. Refer to Figure 32-2. Remove hardware securing one skid tube (left or right) to same side strut assemblies.
3. Remove hardware securing cross tube (to be replaced) to strut assemblies. Using brass drift, tap on strut assembly collars to separate struts from cross tube. Do not tap on jack tabs.

C. Installation

Refer to R66 Illustrated Parts Catalog (IPC) Figure 32-1.

> NOTE
>
> When installing A936-3 (ground) wire assembly, verify finish is removed from surface under wire terminal.

1. Refer to Figure 32-2. Lightly coat mating surfaces of cross tube with zinc-chromate or epoxy primer using approved materials per Section 20-70. While primer is wet, install cross tube into strut assemblies and align fastener holes.
2. Install hardware securing cross tube to strut assemblies, standard torque screws per Section 20-32, and torque stripe per Figure 5-1.
3. Install hardware securing left or right skid tube to strut assemblies, standard torque bolts per Section 20-32, and torque stripe per Figure 5-1.
4. Install landing gear per Section 32-10.

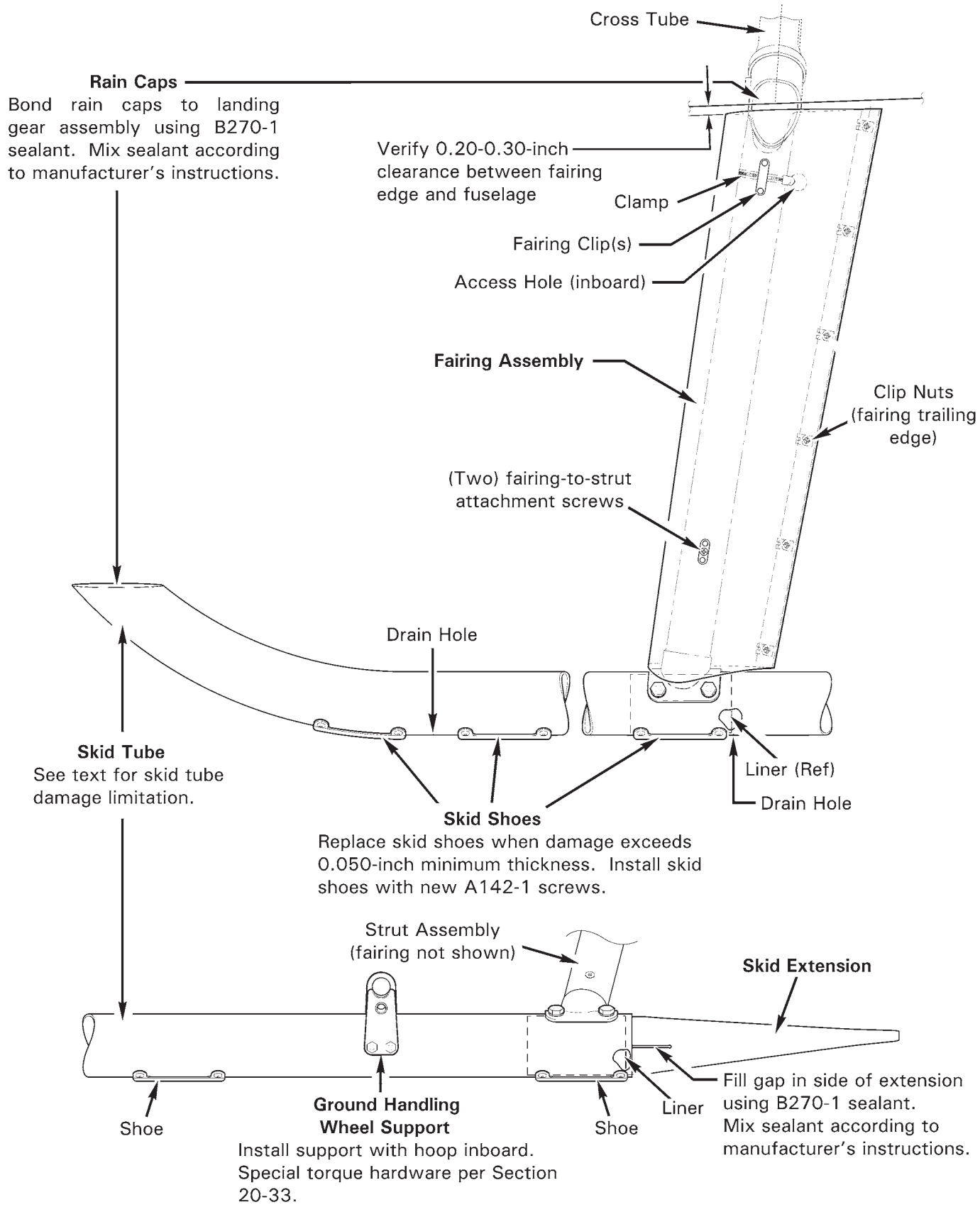

FIGURE 32-3 SKID TUBES AND FAIRINGS
(Strut and skid tube angles exaggerated for clarity)

32-30 Skid Tubes

Refer to R66 Illustrated Parts Catalog (IPC) Figure 32-1.

CAUTION

Minimize personnel movement around raised helicopter. Use caution when working under raised skid tubes.

A. Inspection

1. Install ground handling wheels per Section 9-11.

2. Pull down on tail rotor gearbox and place blocks under skid tubes, forward of forward strut assemblies. Skids should be approximately parallel with the ground.

3. Measure damage on left or right skid tube. Replace skid tube if damage exceeds the following limits:

   a. 0.030 inch maximum depth longitudinal scratch (no length limit).
   b. 0.030 inch maximum depth and 0.50 inch maximum length circumference scratch.
   c. 0.500 inch maximum width flat spot.

4. Measure the thickness of skid tube's skid shoes (five per skid). Replace a skid shoe per Section 32-31 if damage exceeds 0.050 inch minimum thickness. Repeat steps on opposite skid tube.

B. Removal

1. Jack or hoist helicopter per Sections 7-10 or 7-20. Raise skids above ground approximately 4 inches.

2. Refer to Figure 32-3. Remove hardware securing left or right skid tube to same side strut assemblies.

C. Installation

1. Jack or hoist helicopter per Sections 7-10 or 7-20 to required height.

2. Refer to Figure 32-3. Install hardware securing skid tube to strut assemblies. Standard torque bolts per Section 20-32 and torque stripe per Figure 5-1.

3. Lower helicopter per Sections 7-10 or 7-20.

32-31 Skid Shoes

Refer to R66 Illustrated Parts Catalog (IPC) Figure 32-1.

A. Inspection

Inspect skid tubes and skid shoes per Section 32-30.

B. Replacement

1. Refer to Figure 32-3. Remove and discard hardware securing skid shoe to skid tube. Discard a shoe damaged beyond limits in Section 32-30.

2. Install new A142-1 screws to secure skid shoe to skid tube. Standard torque screws per Section 20-32.

32-32 Skid Extension Replacement

Refer to R66 Illustrated Parts Catalog (IPC) Figure 32-1.

1. Remove skid tube per Section 32-30.

2. Refer to Figure 32-3. Remove and discard hardware securing aft skid shoe to skid tube. Remove skid extension.

3. Clean interior of skid tube as practical. Install new skid extension and align fastener holes.

4. Install new A142-1 screws to secure aft skid shoe to skid tube. Standard torque screws per Section 20-32.

5. Install skid tube per Section 32-30.

6. Fill gap in side of skid extension using B270-1 sealant. Mix sealant according to manufacturer's instructions.

32-33 Ground Handling Wheel Support Replacement

Refer to R66 Illustrated Parts Catalog (IPC) 32-1.

1. Refer to Figure 32-3. Remove hardware securing support weldment to skid tube and remove support.

2. Install hardware securing new support weldment to skid tube. Verify correct support orientation. Special torque hardware per Section 20-33 and torque stripe per Figure 5-1.

32-40 Fairing Assemblies

Refer to R66 Illustrated Parts Catalog (IPC) Figure 32-5.

A. Removal

1. Refer to Figure 32-3. Remove screws securing fairing assembly together at trailing edge.

2. Remove screws securing fairing assembly to strut assembly. Unscrew clamp through fairing inboard access hole and remove fairing.

B. Installation

1. Refer to Figure 32-3. Verify fairing assembly clip nuts are installed. Verify clamp threads through fairing clips, with hex facing inboard access hole.

2. Position fairing assembly on strut assembly and install screws securing fairing to strut.

3. Tighten clamp, and special torque hex through fairing assembly inboard access hole per Section 20-33.

4. Install screws securing fairing assembly together at trailing edge.

5. Verify 0.20-0.30 inch clearance between fairing assembly edge and fuselage. Remove and trim fairing as required; reinstall per preceding steps.

32-50 Maintenance

1. Refer to Figure 32-3. Verify drain holes in bottom of skid tubes are free of obstructions (two per skid, between two forward skid shoes and aft of skid shoe at forward strut assembly).

2. Refinish landing gear to prevent corrosion per Chapter 20.

3. Inspect skid tubes and skid shoes per Section 32-30, especially following touch-down autorotations or running take-offs or landings.

4. Verify skid tube and strut assembly rain caps are properly sealed. Replace or re-seal rain caps per the following:

   a. Using putty knife or plastic scraper, cut sealant securing rain cap to landing gear assembly and remove cap. Remove sealant residue from caps, cross tubes, and/or strut assemblies. Clean surfaces with solvent.

   b. Verify rain caps and bonding surfaces are clean and dry. Bond caps to landing gear assembly using B270-1 sealant. Mix sealant according to manufacturer's instructions.

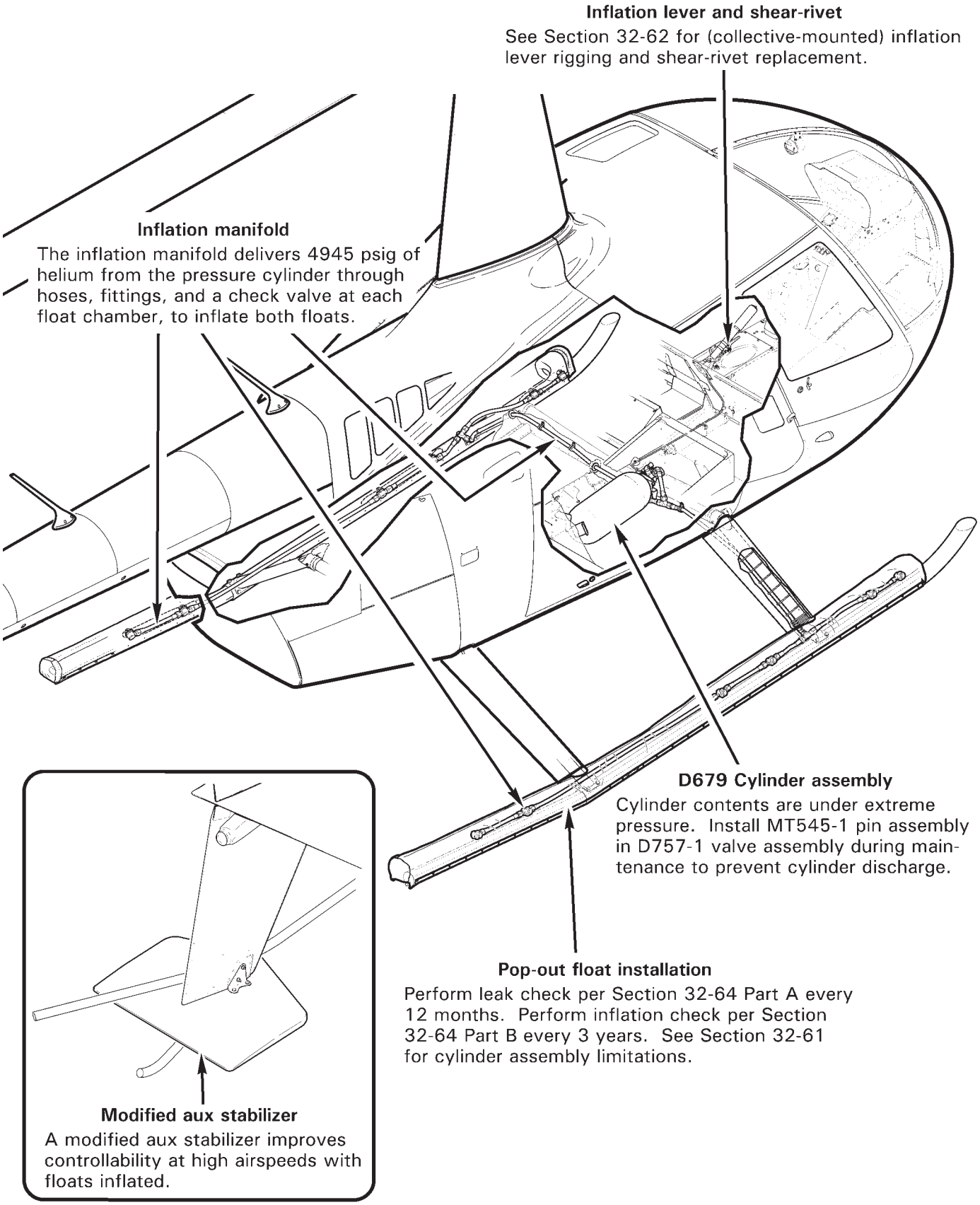

FIGURE 32-4 POP-OUT FLOATS INSTALLATION

32-60 Pop-Out Floats Installation

Pop-out floats are optional equipment for R66 helicopters. The pop-out float installation includes inflatable floats stowed in protective covers secured to the skid tubes, a pressure cylinder located in the compartment beneath the right aft seat, an inflation manifold, an inflation lever located on the pilot's collective stick, and a modified aux stabilizer.

The valve located on top of the pressure cylinder has a pressure gage, a thermal relief valve which releases pressure if exposed to excessive heat (281° F), a metal sealing disk, and a spring-loaded pin.

The red inflation lever on the pilot's collective stick is equipped with a spring-loaded safety to prevent inadvertent float inflation. To inflate the floats, the safety is pushed in and rotated from LOCKED to READY position, then the inflation lever is squeezed with enough force to shear the aluminum rivet. The spring-loaded pin in the pressure cylinder valve punctures the metal sealing disk, and 4945 psig (nominal, at 20° C) of helium is released into the inflation manifold to inflate both floats.

The manifold consists of hoses, fittings, and a check valve at each of the six float chambers (per float). Each float chamber has a topping valve for manual inflation, and a pressure relief valve to vent excess internal pressure.

A modified aux stabilizer improves controllability at high airspeeds with floats inflated.

32-61 Cylinder Assembly

Refer to R66 Illustrated Parts Catalog (IPC) Figure 32-7.

NOTE

Cylinders are discharged during float inflation check every 3 years. Cylinder hydrostatic test is required every 5 years. Cylinder life-limit is 15 years from date of manufacture. To ensure cylinder limitations are not overflown, returning to service cylinders with more than 2 years since hydrostatic test or 12 years since date of manufacture is not recommended.

WARNING

D679 Cylinder contents are under extreme pressure. Install MT545-1 pin assembly in D757-1 valve assembly during maintenance to prevent cylinder discharge.

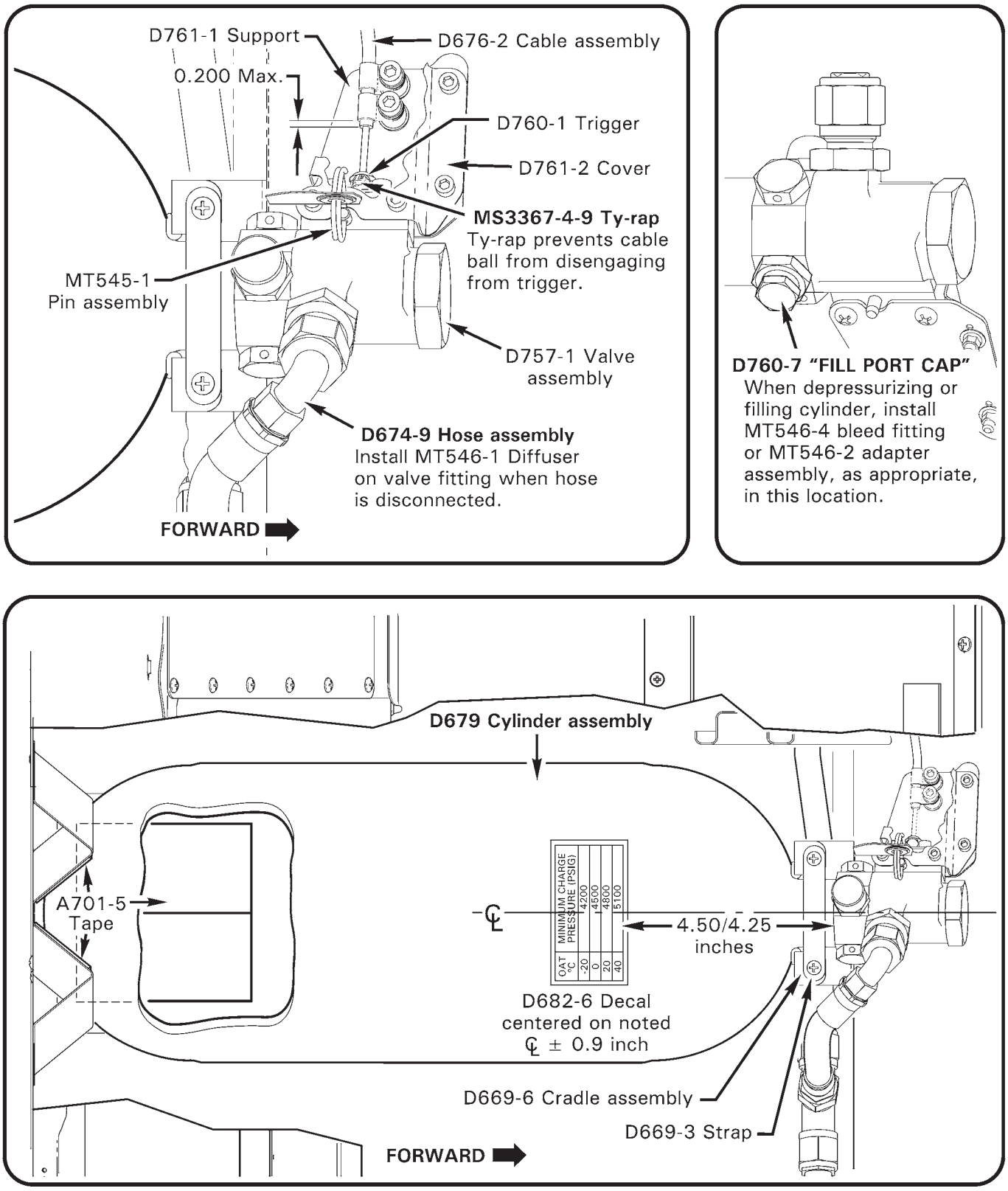

FIGURE 32-5 POP-OUT FLOATS CYLINDER ASSEMBLY

32-61 Cylinder Assembly (continued)

A. Removal

1. Refer to Figure 32-5. Hinge right aft seat assembly forward. Install MT545-1 pin assembly in D757-1 valve assembly.

2. Disconnect D674-9 hose assembly from valve fitting. Install MT546-1 diffuser on valve fitting and special torque diffuser to 120 in.-lb. Cap hose to prevent foreign object contamination.

3. Remove hardware securing D761-2 cover to valve and D761-1 support. Remove cover.

4. Remove hardware securing D761-1 support to valve. Do not kink cable.

5. Cut and discard MS3367-4-9 ty-rap secured to D760-1 trigger. Disengage D676-2 cable assembly ball from trigger, but do not kink cable.

6. Remove screws securing D669-3 strap to D669-6 cradle assembly and remove strap. Carefully remove cylinder.

B. Depressurization

CAUTION

Use appropriate eye and hearing protection. Do not service cylinder assembly while cylinder is installed in helicopter.

1. Remove cylinder per Section 32-61 Part A. Verify MT545-1 pin assembly and MT546-1 diffuser are properly installed.

2. Refer to Figure 32-5. Remove D760-7 cap (etched with “FILL PORT”) from valve assembly. A loud pop may be heard when cap’s seal is broken.

3. In a well-ventilated area, slowly screw MT546-4 bleed fitting assembly into fill-port until the noise of escaping gas is heard. Screw fitting in or out to adjust flow rate. Finish bleeding cylinder with bleed fitting fully in. When noise ceases, verify cylinder pressure gage indicates zero. Remove bleed fitting.

4. Install cap in valve assembly and special torque cap to 40 in.-lb.

5. Evaluate cylinder life and hydrostatic test status.

32-61 Cylinder Assembly (continued)

C. Filling

CAUTION

Use appropriate eye and hearing protection. Do not service cylinder assembly while cylinder is installed in helicopter.

WARNING

ONLY cylinders labeled "DOT-E 10915-4945" may be refilled. Cylinders labeled "DOT-E 10915-4500" must be returned to RHC for exchange/upgrade.

WARNING

Verify D757-1 (gray) valve assembly is engraved with "D758-4" or has a data plate indicating B900-8 modification.

Filling equipment (pumps, hoses, fittings, etc.) must be rated for 6000 psi minimum working pressure and be in good condition.

Cylinder temperature and pressure must be kept within safe limits. Monitor pressure gage and use thermocouple or other appropriate temperature probe to monitor temperature on face of thermal relief fitting during fill. Do not allow temperature to exceed 50°C (122°F) or pressure to exceed 5500 psig. If limits are approached, stop fill and allow cylinder to cool and pressure to drop before continuing. Placing cylinder in a water bath and using slow to moderate fill rates is recommended. If using water bath, keep water level below valve assembly to avoid water contamination of valve.

1. Evaluate cylinder life and hydrostatic test status.

2. Refer to Figure 32-5. Install MT545-1 pin assembly in D757-1 valve assembly. Install MT546-1 diffuser on valve fitting and special torque diffuser to 120 in.-lb.

3. Remove D760-7 cap (etched with "FILL PORT") from valve assembly. A loud pop may be heard when cap's seal is broken.

4. Install MT546-2 adapter assembly into fill port and special torque adapter to 40 in.-lb. Attach fill hose to adapter.

5. Fill with 99.98% minimum purity (industrial grade) helium per chart below:

Ambient Temperature (°C)	Pressure (psig)
-20	4268
-10	4437
0	4606
10	4776
20	4945
30	5114
40	5283

32-61 Cylinder Assembly (continued)

C. Filling (continued)

6. Allow cylinder and valve to cool to ambient temperature. Top off with helium to compensate for any pressure loss due to cooling.

7. Remove fill hose and MT546-2 adapter assembly.

8. Remove & discard old o-ring from cap. Lightly coat new MS28778-2 o-ring with A257-19 lubricant and install o-ring on fill-port cap at base of threads. Install cap in valve assembly and special torque cap to 40 in.-lb.

D. Installation

WARNING

Verify D757-1 (gray) valve assembly is engraved with "D758-4" or has a data plate indicating B900-8 modification.

1. Fill cylinder per Section 32-61 Part C, if not previously accomplished.

2. Refer to Figure 32-5. Install MT545-1 pin assembly in D757-1 valve assembly.

3. Hinge right aft seat assembly forward. Verify A701-5 (anti-chafe) tape protects cylinder where cylinder base contacts cabin structure in three locations. Carefully position cylinder in D669-6 cradle assembly.

4. Engage D676-2 cable assembly ball in D760-1 trigger; do not kink cable. Install MS3367-4-9 ty-rap as shown. Cinch ty-rap until snug without over-tightening, and trim tip flush with head. Install hardware securing D761-1 support to valve.

5. Verify cable housing protrudes through clamps on support flush-to-0.200 inch maximum. Adjust as necessary.

6. Rotate cylinder as required to minimize cable bending and to ensure clearance with cabin structure.

7. Verify D682-6 decal is in specified location. If decal location is incorrect, remove old decal and install new decal on cylinder. Install screws securing D669-3 strap to cradle assembly.

8. Install hardware securing D761-2 cover to valve and D761-1 support.

9. Remove MT546-1 diffuser, if installed. Connect D674-9 hose assembly to valve fitting. Orient hose as required to maintain miminum 0.25 inch clearance to cylinder and adjacent vertical panel. Special torque B-nut per Section 20-33 and torque stripe per Figure 5-1.

10. Rig inflation lever and replace shear-rivet per Section 32-62.

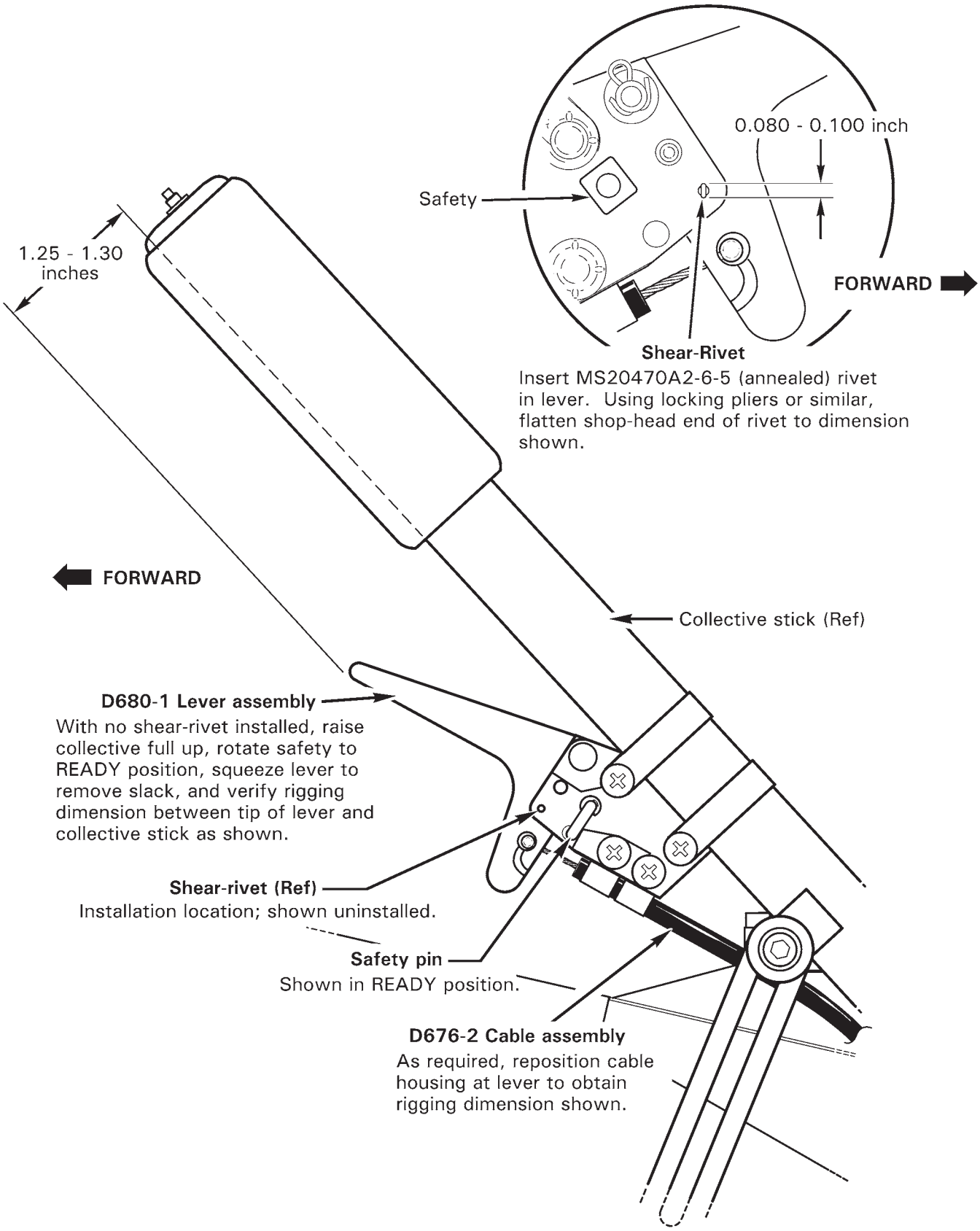

FIGURE 32-6 POP-OUT FLOATS LEVER RIGGING AND SHEAR-RIVET REPLACEMENT

32-62 Lever Rigging and Shear-Rivet Replacement

Refer to R66 Illustrated Parts Catalog (IPC) Figure 32-9.

WARNING

D679 Cylinder contents are under extreme pressure. Install MT545-1 pin assembly in D757-1 valve assembly during maintenance to prevent cylinder discharge.

WARNING

Install MS20470A2-6-5 (or MS20470A2-6.5) annealed rivet in lever assembly or rivet may be too hard to shear.

1. Install cylinder per Section 32-61 Part D, if not previously accomplished. Install MT545-1 pin assembly in D757-1 valve assembly.

2. Refer to Figure 32-6. With no shear-rivet installed, raise collective full up, push in and rotate D680-1 lever assembly safety to READY position, squeeze lever to remove cable slack, and verify 1.25 - 1.30 in. between tip of lever and collective stick as shown. As required, reposition D676-2 cable assembly housing at lever to obtain dimension.

3. Push in and rotate lever safety to LOCKED position. Simultaneously squeeze lever and verify no preload in cable thru full collective travel.

4. Refer to Figure 32-6. Insert MS20470A2-6-5 (or MS20470A2-6.5) rivet in lever as shown. Using locking pliers or similar, flatten shop-head end of rivet to 0.080-0.100 in.

5. Verify lever safety is in LOCKED position. Remove MT545-1 pin assembly from D757-1 valve assembly.

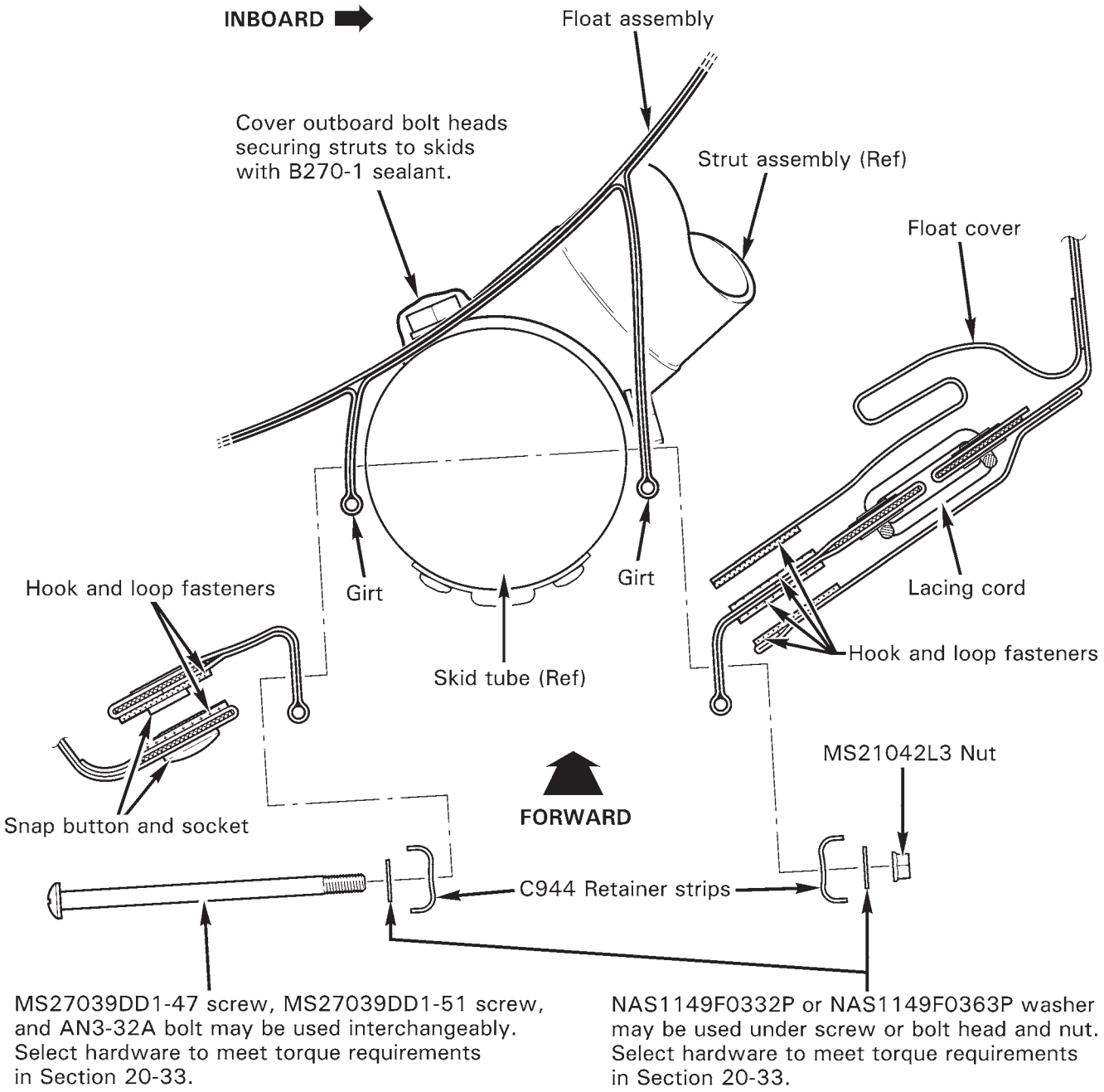

FIGURE 32-7 POP-OUT FLOATS FLOAT INSTALLATION

32-63 Float Installation

Refer to R66 Illustrated Parts Catalog (IPC) Figure 32-11 and 32-17.

WARNING

D679 Cylinder contents are under extreme pressure. Install MT545-1 pin assembly in D757-1 valve assembly during maintenance to prevent cylinder discharge.

A. Removal

NOTE

Floats are subject to damage during removal. Remove floats if necessary for repairs.

1. Refer to Figure 32-5. Hinge right aft seat assembly forward. Install MT545-1 pin assembly in D757-1 valve assembly.
2. Disconnect D674-12 hose assembly from T-fitting near float. Cap fittings to prevent foreign object contamination.
3. Refer to Figure 32-7. Detach float cover hook and loop tape inboard of skid and loosen lacing.
4. Remove hardware securing float to skid tube, and skid extension.
5. Use care when removing C944 retainer strips from girts, and when separating girts from skid tube and skid extension. Repeat steps for opposite float.

B. Installation

1. Refer to Figure 32-7. Verify (outboard) bolt heads securing struts to skids are covered with B270-1 sealant. Apply additional sealant as required.
2. Position deflated float over skid tube and skid extension. Align holes in C944 retainer strips, float covers, float girts, and skid and install hardware. Special torque nuts per Section 20-33.
3. Inflate float with filtered, oil-free, dry air to 3.0 psig at topping valves.
4. Remove caps and connect D674-12 hose assembly to T-fitting near float. Special torque hose B-nut per Section 20-33, apply B270-22 protectant to exposed aluminum surfaces on hose B-nut and T-fitting, and torque stripe per Figure 5-1. Repeat steps for opposite float.
5. Pack floats per Section 32-63 Part C.

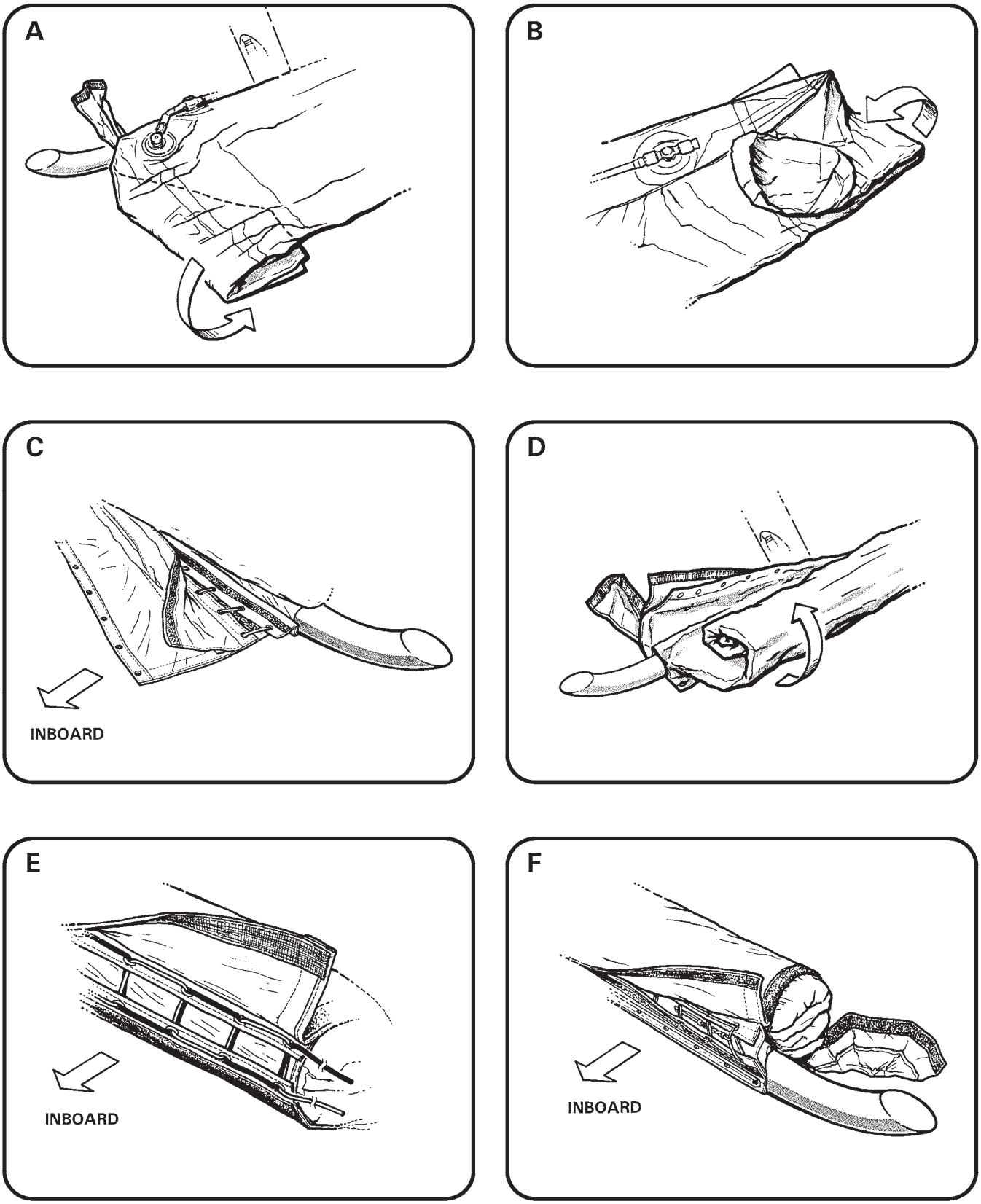

FIGURE 32-8 POP-OUT FLOATS FLOAT PACKING

32-63 Float Installation (continued)

C. Packing

1. Install floats per Section 32-63 Part B.
2. Spread deflated float outboard of skid tube. Vacuum as much air as possible from each float chamber through topping valves. Smooth out wrinkles.
3. Lightly dust float and inside float cover with talcum powder.
4. Refer to Figure 32-7 and Figure 32-8 Detail A. At girt forward edges, fold float perpendicular to skid tube; tuck material under and aft of float as shown.
5. Refer to Figure 32-8 Detail B. At girt aft edges, fold float perpendicular to skid tube; lay material over and forward of float as shown.
6. Refer to Figure 32-8 Detail C. Loosen lacing cords securing float cover to inboard girt. Detach, align, and secure inboard hook and loop fasteners.

NOTE
If possible, roll float into cover with the assistance of six or seven people.

7. Refer to Figure 32-8 Detail D. Align hoses and valve cover flaps. Roll float from outboard edge toward skid tube, as tightly as possible. Hold float on top of skid.
8. Apply A257-7 lubricant to mating surfaces of float cover and (outboard) girt snaps. Button snaps, and secure hook and loop fasteners.
9. Refer to Figure 32-8 Detail E. Verify lacing cords are installed in cover grommets in crossover ("ladder" lacing) method shown. Tighten cords starting at the aft skid extension working forward: at each segment, pull cords tight or until material edges join, but do not overtighten near valves. Tie cord ends in double square knots (4 alternating overhand knots).
10. Refer to Figure 32-8 Detail F. Tuck-in cord ends and secure hook and loop fasteners. Secure hook and loop fasteners at end caps.
11. Verify all fasteners are properly secured. Verify floats are rolled tight, with no lumps or loose areas.

32-64 System Maintenance

A. Leak Check

WARNING

D679 Cylinder contents are under extreme pressure. Install MT545-1 pin assembly in D757-1 valve assembly during maintenance to prevent cylinder discharge.

1. Disconnect D674-1 line assembly from presssure cylinder valve. Install protective cap on cylinder valve fitting. Cover D674-1 line fitting to prevent contamination, but do not install an air-tight seal (D674-1 line fitting must be allowed to leak to verify check valve function at each float chamber).

2. Unfasten hook-and-loop fasteners along inboard sections of float cover to expose lacing. Loosen, but do not remove, lacing.

3. Unfasten outboard sections of float cover and unroll float to expose valves.

4. Inflate floats with filtered, oil-free, dry air to 2.0 psig via topping valves.

5. Allow float air temperature to stabilize for 5 minutes minimum then record OAT and pressure in each float chamber.

6. One to two hours after initial pressure check, again record OAT and pressure in each float chamber. Allowable chamber pressure drop from initial measurement is 0.2 psig adjusted for any temperature change. Pressure will change by 0.06 psig per degree C temperature change. For example, float chamber pressure will decrease 0.6 psig if temperature drops 10 degrees C.

7. If leaks are detected, repair float with supplied repair kit and repeat steps 4, 5, & 6.

8. Connect D674-1 line assembly to cylinder valve and torque per Section 20-33.

9. Pack float per Section 32-63 Part C.

NOTE

Annually apply A257-7 dry-film lubricant (see Section 20-78) to float cover snap mating surfaces.

32-64 System Maintenance (continued)

B. Inflation Check

WARNING

D679 Cylinder contents are under extreme pressure. Install MT545-1 pin assembly in D757-1 valve assembly during maintenance to prevent cylinder discharge.

1. Unsnap outboard edge of both float covers.

2. Remove locking pin from valve, move inflation lever safety to READY position, and verify area around floats is clear.

3. Squeeze inflation lever to inflate floats. Approximately 20 pounds force will be required due to the shear-rivet. Time for floats to attain full shape without wrinkles should be three seconds or less.

CAUTION

Floats inflate rapidly and with a loud noise. Keep area clear during inflation and inform all nearby personnel. Remove or close all doors prior to inflation. Open doors interfere with float inflation and may be damaged.

4. Allow float temperatures to stabilize for at least five minutes then record OAT and pressure in each float chamber. Minimum allowable pressures are:

OAT (degrees C)	Minimum Pressure (psig) in Forward Two Chambers	Minimum Pressure (psig) in Middle Chamber	Minimum Pressure (psig) in Aft Two Chambers
5-9	1.30	1.00	0.60
10-14	1.60	1.30	0.90
15-19	1.90	1.60	1.20
20-24	2.20	1.90	1.50
25-29	2.50	2.20	1.80
30-34	2.80	2.50	2.10
35-39	3.10	2.80	2.40

32-64 System Maintenance (continued)

B. Inflation Check (continued)

5. Disconnect D674-1 hose assembly from pressure cylinder valve immediately after initial pressure check. Install protective cap on cylinder valve fitting. Cover D674-1 hose fitting to prevent contamination, but do not install an air tight seal (D674-1 hose must be allowed to leak to verify check valve function at each float chamber).

6. Verify no rips or chafing on floats or covers.

7. One to two hours after initial pressure check, again record OAT and pressure in each float chamber. Allowable chamber pressure drop from initial measurement is 0.20 psi adjusted for any temperature change. For example, float chamber pressure will decrease 0.6 psig if temperature drops 10 degrees C.

8. If leaks are detected, repair float with supplied repair kit then perform leak check per Section 32-64 Part A on repaired float chamber.

9. Connect D674-1 hose assembly to valve fitting. Orient line as required to maintain minimum 0.25 inch clearance to cylinder and C390-5 panel. Torque B-nut per Section 20-33 and torque stripe.

10. Pack floats per Section 32-63 Part C.

> NOTE
>
> Annually apply A257-7 dry-film lubricant (see Section 20-78) to float cover snap mating surfaces.

11. Remove cylinder assembly and depressurize cylinder per Section 32-61 Parts A & B. Return cylinder to RHC for overhaul-exchange.

12. Install serviceable cylinder assembly per Section 32-61 Part D.

CHAPTER 33

LIGHTS

Section	Title	Page
33-00	Description	33.1
33-10	Exterior Lights	33.1
33-11	Strobe Light(s)	33.1
33-12	Navigation Lights	33.2
33-13	Landing Lights	33.3
33-20	Interior Lights	33.3
33-21	Panel Light	33.3

Intentionally Blank

CHAPTER 33

LIGHTS

33-00 Description

A red anti-collision light is installed on the tailcone and is controlled by the strobe switch. Position lights are installed on each side of the cabin and in the tail and are controlled by the nav lights switch. A light at the top of the windshield and post lights illuminate the instrument panel. Panel lighting is active when the nav lights switch is on and lighting is dimmed via the knob above the nav lights switch. An overhead map light mounted on a swivel is controlled by an adjacent switch with high and low settings. The map light may be used for emergency lighting of the instrument panel. An additional cabin light with an adjacent switch is located just aft of the map light. The map and cabin lights are not connected to the dimmer circuit.

Two long-life, high intensity discharge (HID) landing lights are installed in the nose. One wide-angle and one narrow-beam light are used to increase lighted area. One landing light switch controls both lights and is located on the cyclic center post.

> NOTE
>
> Continuous operation of landing and position lights in flight is recommended to promote collision avoidance.

An optional flashing light may be mounted on the tailcone in addition to the standard anti-collision light. On earlier aircraft, the optional light is controlled by an additional position on the strobe switch. On later aircraft, the optional light is controlled by a separate switch.

33-10 Exterior Lights

33-11 Strobe Light(s)

A. Removal

1. Turn battery switch off. Pull out STROBE circuit breaker (5 amp, or 7½ amp if forward strobe is installed) at panel.

2. Remove hardware securing A708 strobe light assembly's retainer, lens, and gasket to light assembly.

3. Remove hardware securing light assembly to tailcone mount.

4. Remove hardware securing ground wire, if ground is installed at mount. Disconnect light assembly harness from airframe harness and remove light assembly.

33-11 Strobe Light(s) (continued)

B. Installation

1. Turn battery switch off. Pull out STROBE circuit breaker (5 amp, or 7½ amp if forward strobe is installed) at panel.

2. Install hardware securing A708 strobe light assembly's ground wire to tailcone mount, if ground is installed at mount. Connect light assembly's harness to airframe harness at connectors.

3. Install hardware securing light assembly to tailcone mount (white forward strobe: two missing columns of LEDs facing forward). Verify security.

4. Install hardware securing light assembly's gasket, lens, and retainer to light assembly. Verify security.

5. Push in STROBE circuit breaker (5 amp, or 7½ amp if forward strobe is installed) at panel. Turn battery switch and strobe switch(es) on and verify function. Turn battery switch off.

33-12 Navigation Lights

A. Removal

1. Turn battery switch off. Pull out LTS circuit breaker (5 amp) at panel.

2. a. Position Lights: Remove screw securing retainer, lens, and gasket to light assembly. Remove hardware securing light assembly, gasket, and ground wire to chin. Cut and discard ty-rap securing excess wire to light assembly, pull out light assembly, and disconnect light assembly harness from airframe harness at connector.

   b. Tail Light: Remove screws securing retainer, lens, gasket, and light assembly to stabilizer mount. Pull out light assembly and disconnect light assembly harness from airframe harness at connector.

B. Installation

1. Turn battery switch off. Pull out LTS circuit breaker (5 amp) at panel.

2. a. Position Lights: Connect light assembly harness to airframe harness at connector. Install hardware securing light assembly, gasket, and ground wire to chin. Verify security. Install ty-rap securing excess wire to light assembly. Cinch ty-rap until snug without over-tightening, and trim tip flush with head. Install screw securing retainer, lens, and gasket to light assembly. Verify security.

   b. Tail Light: Connect light assembly harness to airframe harness at connector. Install screws securing retainer, lens, gasket, and light assembly to stabilizer mount. Verify security.

3. Push in LTS circuit breaker (5 amp) at panel. Turn battery switch and LTS switch on and verify function. Turn battery switch and LTS switch off.

33-13 Landing Lights

A. Removal

1. Turn battery switch off. Pull out LAND LT circuit breaker (7½ amp) at panel.
2. Remove screws securing C526-1 retainer to chin and remove retainer.
3. Disconnect landing light cable from lamp and remove lamp.

B. Installation

1. Turn battery switch off. Pull out LAND LT circuit breaker (7½ amp) at panel.

NOTE
B557-1 (spot) landing light is installed in LH location and B557-2 (flood) taxi light is installed in RH location.

2. Connect landing light cable to landing light.
3. Install screws securing C526-1 retainer to chin.
4. Push in LAND LT circuit breaker (7½ amp) at panel. Turn battery switch and landing light switch on (cyclic center post) and verify function. Turn battery switch and landing light switch off.

33-20 Interior Lights

33-21 Panel Light

A. LED Assembly Replacement

1. Turn battery switch off. Pull out LTS circuit breaker (5 amp) at panel.
2. Remove hardware securing G196 light assembly to windshield stiffener. Remove two cap screws securing cover and LED assembly to housing. Disconnect LED assembly wires from airframe harness and remove LED assembly.
3. Connect F090-2289 (white) airframe harness wire to new LED assembly red wire, and F090-2290 airframe harness wire to LED assembly black wire. Install cover (chamfer facing away from housing) and install two cap screws. Install hardware securing G196 light assembly to windshield stiffener. Verify security.
4. Push in LTS circuit breaker (5 amp) at panel. Turn battery switch and LTS switch on and verify function. Verify dimming knob adjusts brightness. Turn battery switch and LTS switch off.

Intentionally Blank

CHAPTER 52

DOORS AND WINDOWS

Section	Title	Page
52-00	Description	52.1
52-10	Door Assembly	52.1
52-11	Door Lock Replacement	52.4
52-12	Weather Seal (Door Assembly) Replacement	52.4
52-13	Gas Springs	52.7
52-20	Door Vent Replacement	52.7
52-21	Weather Seal (Door Vent) Replacement	52.7
52-22	Door Vent Hinge Replacement	52.8
52-23	Pivot Friction Adjustment	52.8
52-30	Windshield Assembly	52.11

Intentionally Blank

CHAPTER 52

DOORS AND WINDOWS

52-00 Description

The R66 has four passenger doors and one main baggage compartment door. Passenger doors may be removed and installed by maintenance personnel or pilots.

Passenger doors are constructed of fiberglass and thermoplastics. Passenger doors, locks, weather seal, gas springs, and door vents and hinges may be replaced, and vent pivot friction may be adjusted.

Periodically inspect windshield for cracks or crazing and replace windshield that exceeds damage criteria per Section 52-30.

52-10 Door Assembly

Refer to R66 Illustrated Parts Catalog (IPC) Chapter 52.

A. Removal

1. Refer to Figures 52-1 and 52-2. To disconnect door from gas spring mechanism:

   a. Forward Doors: Pull D573-4 rod up and off of arm assembly ball joint.

   b. Aft Doors: Insert flat-tip screwdriver and pry up spring clip locking C394-1 gas spring to channel ball joint. Pull gas spring up and off of ball joint.

2. Remove rings from door hinge pins, lift pins up from door frame hinge assemblies, and remove door.

B. Installation

WARNING

Failure to install a ring in each door's two hinge pins may allow door to depart aircraft in flight.

1. Refer to Figures 52-1 and 52-2. Align and insert door hinge pins in door frame hinge assemblies.

2. Align forward door D573-4 rod with arm assembly ball joint, or aft door C394-1 gas spring with channel ball joint, and push down to lock.

3. Install rings in door hinge pins.

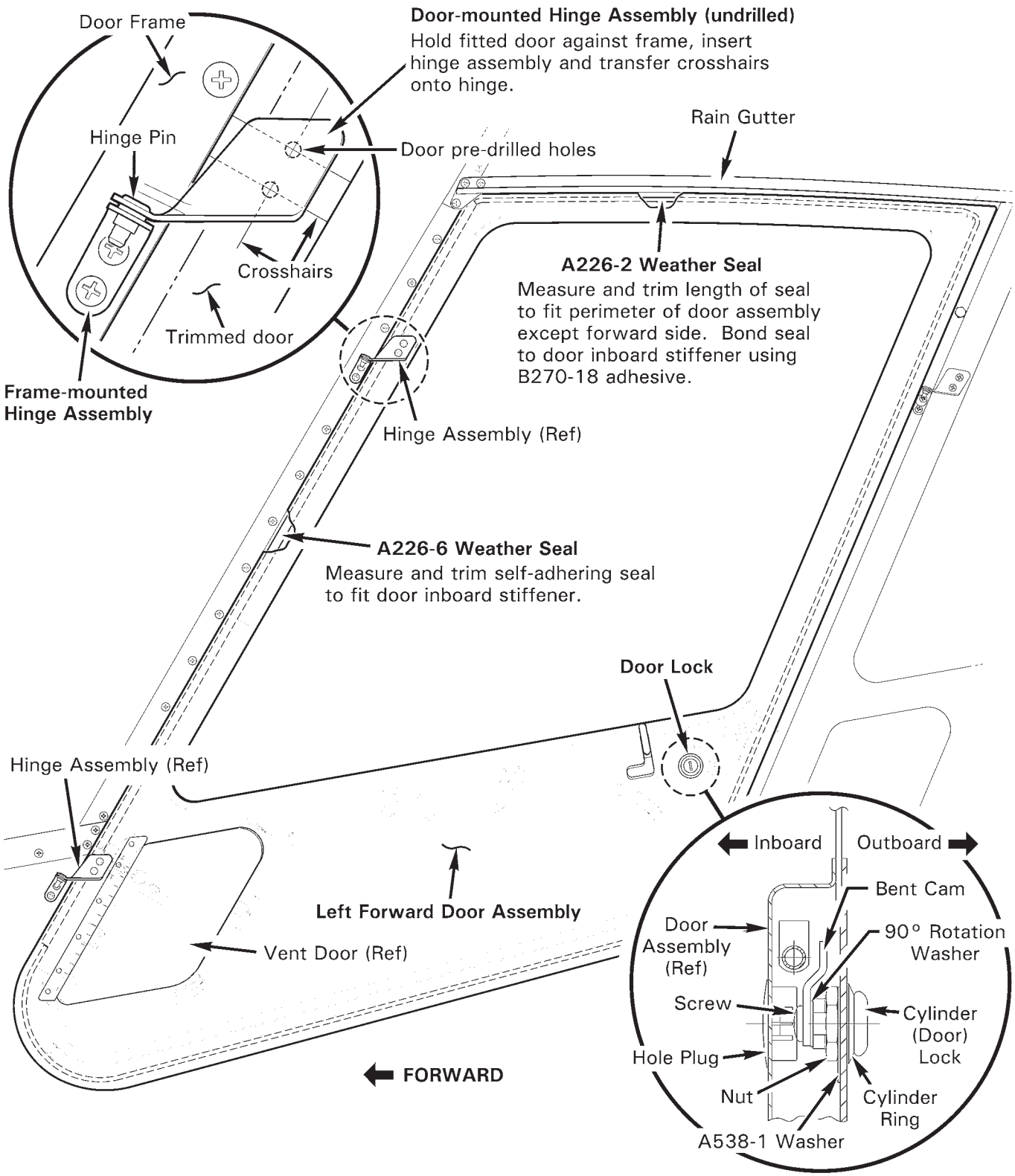

FIGURE 52-1 DOOR ASSEMBLY

52-10 Door Assembly (continued)

C. Replacement

CAUTION

Use proper respiratory protection when handling fiberglass.

CAUTION

Protect door windows and paint from scratches or scuff marks when door maintenance is performed on workbench.

1. Refer to Figure 52-1. As required, lay masking tape on surfaces of door frame, new door hinges, and new door, to mark with soft pencil.
2. Press new door forward and top edge weather seals against door frame recess (rain gutter interferes with top edge until trimmed).
3. Using soft pencil, trace door forward edge onto masked frame, then transfer approximate edge distance to door. From inside cabin, estimate approximate material to be removed from door top edge, then transfer approximate edge distance to door. Remove door.
4. Using 60-grit grinder, trim forward and top door edges. Perform steps 1 thru 3 until weather seals sit approximately even against door frame recess.
5. Using soft pencil and a straight edge, draw cross hairs through (centers of) door upper hinge assembly pre-drilled holes. Hold fitted door against frame, insert new (door-mounted) hinge assembly in frame-mounted hinge assembly, and transfer cross hairs onto hinge. Remove hinge and door.
6. Drill two 0.170-inch diameter holes at cross hair intersections in hinge assembly and deburr. Remove tape, clean up debris, and prepare hinge assembly and door clamping surfaces using approved solvents per Section 20-70.
7. Install upper hinge assembly on door and special torque screws per Section 20-33.
8. Repeat steps 5 thru 7 for lower door-mounted hinge assembly.
9. Install door. Using 60-grit grinder, trim edges as required for final fitting. Verify doors open and close smoothly and latch correctly. Remove door and bevel edges using 60-grit sandpaper.
10. Prepare surfaces with solvent and touch-up door using approved materials per Section 20-70. Install new door per Section 52-10.

52-11 Door Lock Replacement

Refer to R66 Illustrated Parts Catalog (IPC) Figure 52-1.

CAUTION

Protect door windows and paint from scratches or scuff marks when door maintenance is performed on workbench.

1. Remove door per Section 52-10.
2. Refer to Figure 52-1. Remove hole plug opposite key slot on door interior.
3. Remove screw, bent cam, and 90° rotation washer. Remove nut and A538-1 washer. Press and catch cylinder lock and ring through door.
4. Install new cylinder lock and ring in door. Install lock so key is vertical with teeth down in locked position. Apply thin coat B270-10 adhesive on screw threads, install hardware, and tighten screw.
5. Bond hole plug in place using B270-9 adhesive.

52-12 Weather Seal (Door Assembly) Replacement

Refer to R66 Illustrated Parts Catalog (IPC) Figures 52-1 and 52-7.

1. Remove damaged weather seal using plastic wedge or putty knife. Remove hardened adhesive using approved solvent per Section 20-70, or 60-grit sandpaper, as required.
2. Refer to Figure 52-1. Measure and trim continuous length of A226-2 seal to fit perimeter of door except forward side, as shown. Neatly bond seal to stiffener using B270-18 adhesive. Wipe away excess adhesive prior to curing.
3. Measure and trim length of A226-6 seal to fit forward side of door. Remove self-adhesive preserving strip and neatly bond seal to stiffener.

Intentionally Blank

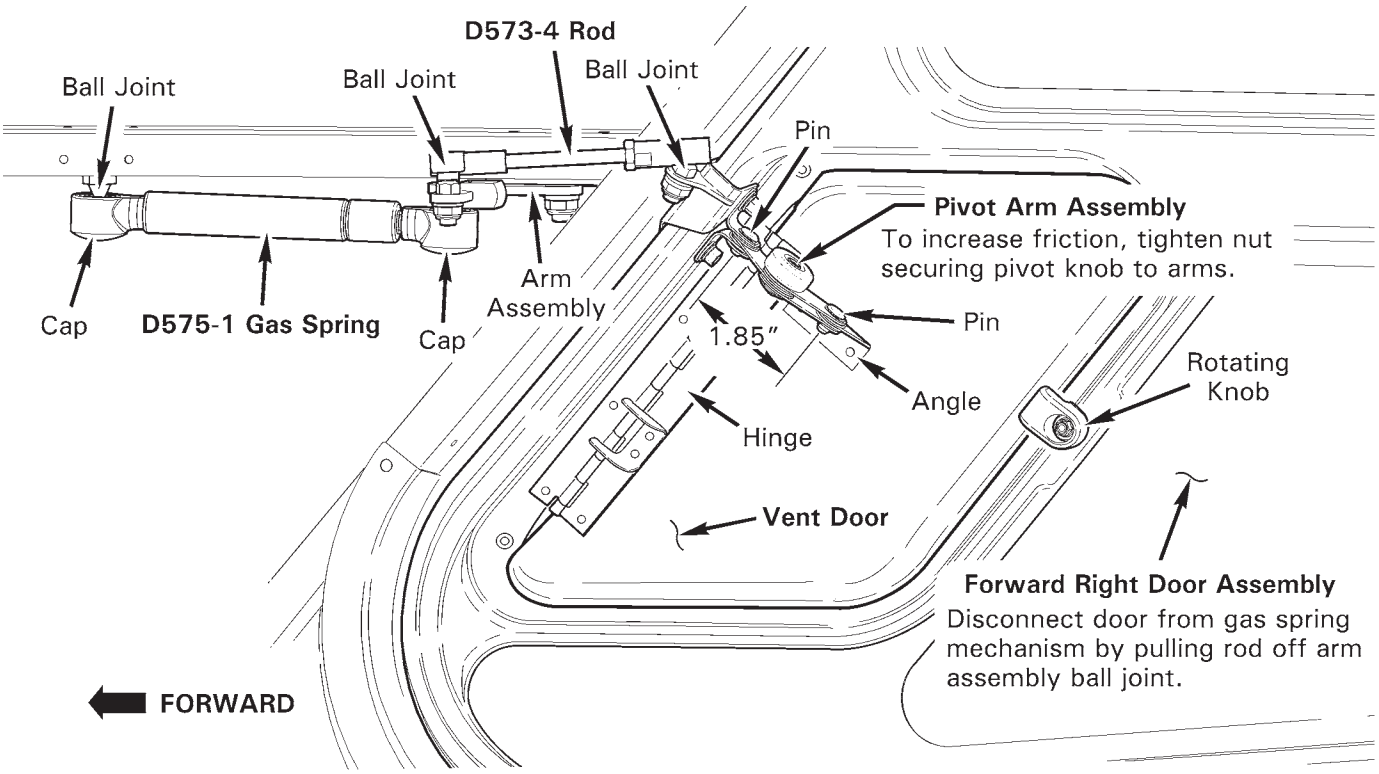

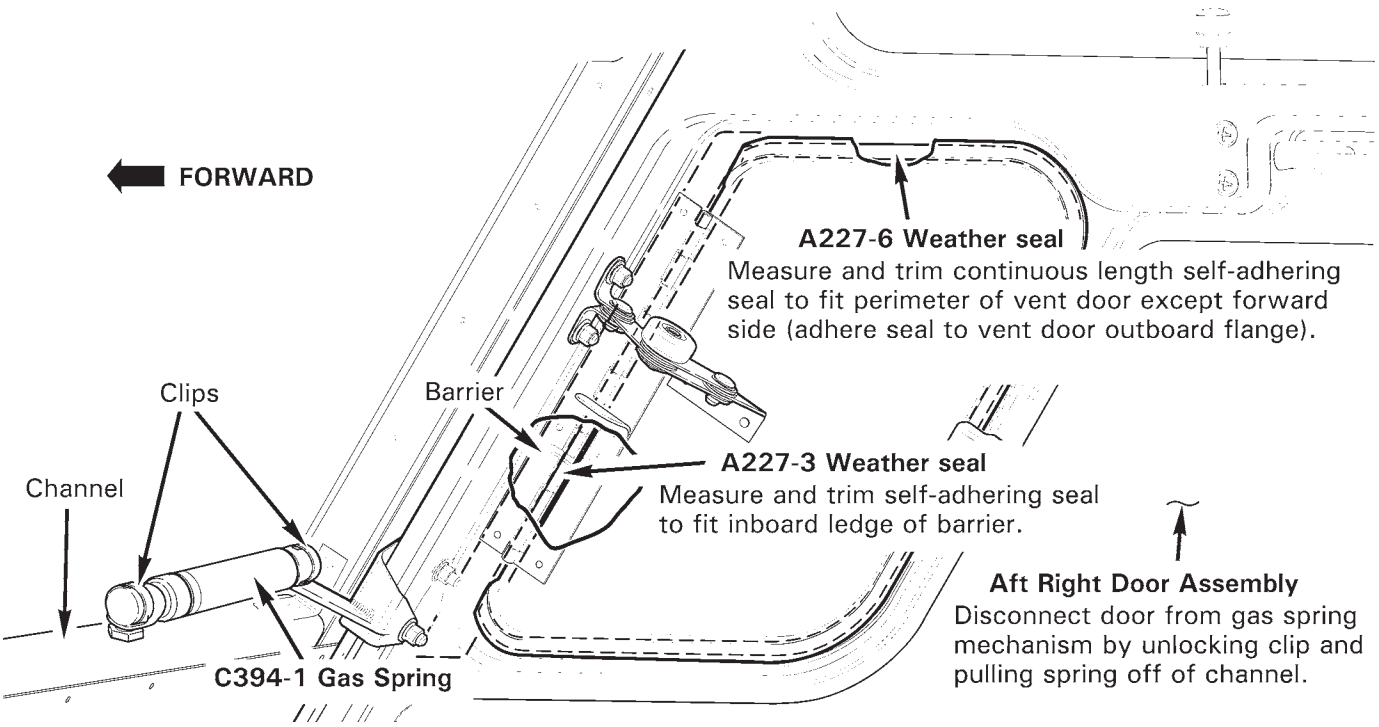

FIGURE 52-2 GAS SPRINGS AND DOOR VENTS

52-13 Gas Springs

Refer to R66 Illustrated Parts Catalog (IPC) Figures 52-5 and 52-11.

A. Removal

1. a. Forward Doors: Insert flat-tip screwdriver and pry down on caps to unlock D575-1 gas spring from ball joints. Push gas spring down and off of ball joints.

   b. Aft Doors: Insert flat-tip screwdriver and pry up spring clips to unlock C394-1 gas spring from ball joints. Pull gas spring up and off of ball joints.

B. Installation

1. a. Forward Doors: Unlock D575-1 gas spring caps. Snap gas spring onto ball joints and lock caps.

   b. Aft Doors: Insert flat-tip screwdriver and pry up C394-1 gas spring spring clips. Snap gas spring onto ball joints and release clips.

52-20 Door Vent Replacement

Refer to R66 Illustrated Parts Catalog (IPC) Figures 52-1 and 52-7.

CAUTION

Use proper respiratory protection when handling fiberglass.

1. Refer to Figure 52-2. Drill out rivets securing hinge and pivot arm assembly angle to door vent. Rotate knob to unlock and remove door vent.

2. Using 60-grit grinder, trim new vent door forward edge as required to match door recess and smooth corners. Bevel edges using 60-grit sandpaper.

3. Hold fitted door vent in recess and match drill hinge four 0.098-inch diameter holes. Smooth hole edges; clean up debris. Prepare surfaces for clamping using approved solvents per Section 20-70. Install rivets securing door to hinge.

4. Extend pivot arm to approximately 1.85 inch between center of pins. Match drill pivot arm assembly angle two 0.098-inch diameter holes. Smooth hole edges; clean up debris. Prepare surfaces for clamping using approved solvents per Section 20-70. Install rivets securing door to arm assembly angle. Verify vent door opens and closes smoothly and latches correctly.

52-21 Weather Seal (Door Vent) Replacement

Refer to R66 Illustrated Parts Catalog (IPC) Figures 52-1 and 52-7.

1. Remove damaged weather seal using plastic wedge or putty knife. Remove hardened adhesive using approved solvent per Section 20-70, or 60-grit sandpaper, as required.

2. Refer to Figure 52-2. Measure and trim continuous length of A226-7 seal to fit perimeter of vent door except forward side, as shown. Remove self-adhesive preserving strip and neatly bond seal to stiffener.

3. Measure and trim length of A226-3 seal to fit ledge of barrier. Remove self-adhesive preserving strip and neatly bond seal to stiffener.

52-22 Door Vent Hinge Replacement

Refer to R66 Illustrated Parts Catalog (IPC) Figures 52-1 and 52-7.

CAUTION

Protect door windows and paint from scratches or scuff marks when door maintenance performed on workbench.

1. Remove door per Section 52-10.

2. Refer to Figure 52-2. Drill out rivets securing hinge to door assembly and door vent. Remove hinge.

3. Smooth hole edges; clean up debris. Prepare surfaces for clamping using approved solvents per Section 20-70.

4. Refer to Section 52-20. Verify proper vent door fit; install rivets securing hinge to door assembly and door vent. Prepare surfaces and touch-up rivet heads and hinge using approved materials per Section 20-70.

52-23 Pivot Friction Adjustment

To increase pivot arm assembly friction, tighten nut securing pivot knob to arms. Do not overtighten screw. No thread exposure required beyond nut.

Intentionally Blank

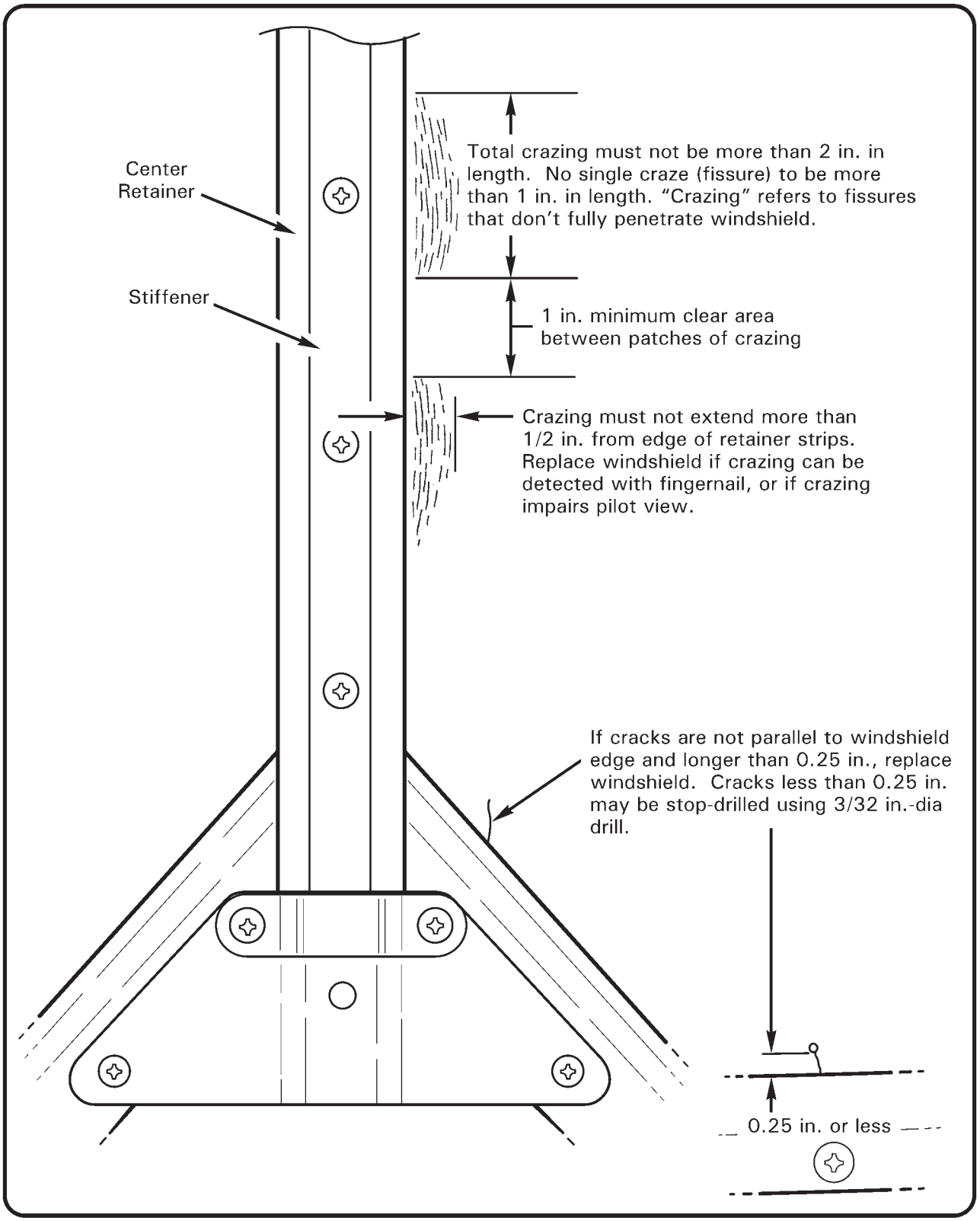

FIGURE 52-3 WINDSHIELD INSPECTION

52-30 Windshield Assembly

A. Removal

1. Remove forward door and hinges.

> NOTE
>
> To prevent scratching windshield, a protective cover should be taped to the inside and outside of the windshield prior to removal.

2. Remove screws and side retainer holding windshield.
3. Reinstall hinges and doors for cabin structure support with window removed.
4. Remove screws and retainers (upper, lower, and middle) holding windshield.
5. Clean silicone sealant from retainers.
6. Clean silicone sealant from windshield for reinstallation.

B. Installation

1. Remove all old sealant from cabin, retainers and windshield.
2. Install windshield and cleco retainer strips.
3. Mask windshield along edge of retainer strips with 1/2″ masking tape. This will catch silicone rubber squeeze-out on installation of retainer strips.
4. Remove retainer strips.
5. To ensure a proper seal, run a bead of B270-13 silicone rubber along entire edge of tape line.
6. While holding windshield in place, cleco retainer strips (center, upper and lower) into place.
7. With doors installed and closed, tighten center retainer strip first. Then tighten upper and lower retaining strips. A second person will be required to tighten nuts inside ship.
8. When center, upper and lower retaining strips are secure, remove door and hinges for side strip installation.
9. Install side retainer strip.
10. Reinstall hinges and door. Ensure all fasteners are tight.
11. Fill any gap between retainer and window with B270-13 silicone rubber.
12. Remove masking tape next to retainers. Be careful not to smear wet sealant.
13. Clean any sealant off windshield after it has been allowed to dry.

52-30 Windshield Assembly (continued)

C. Inspection

1. Inspect windshield for cracks and crazing adjacent to retainer strips per Figure 52-3. If cracks exceed these limits, replace windshields per § 52-30 Part D.

D. Replacement

1. Remove all old sealant on cabin and retainers if they are to be reused.
2. Cleco all window retaining strips in place, checking for proper alignment.
3. Install hinges and doors in door frames and secure. Remove bottom and center retaining strips, leaving side retaining strip to hold door and door frame in position.
4. Hold windshield in place by hand, and align it with frame according to contour of frame and windshield.
5. Mark windshield for trim using non-permanent marker, such as grease pencil or masking tape.
6. Trim to mark. A band saw is recommended. Band saw blade should contain at least 24 teeth per inch.

NOTE
Tape cardboard to band saw table to prevent scratching of windshield. Saw carefully to prevent binding of saw blade and cracking windshield.

7. Hold windshield in place and check for fit. Re-trim as necessary.
8. After windshield is fitted, carefully sand or scrape edges smooth.
9. Install windshield per § 52-30 Part B.

CHAPTER 53

FUSELAGE

Section	Title	Page
53-00	Description	53.1
53-10	Cabin Assembly	53.1
53-11	Repair	53.1
53-20	Fairings, Cowlings, and Panels	53.3
53-21	Engine Cowling	53.3
53-22	Mast Fairing	53.3
53-23	Tailcone Cowling	53.4
53-24	Access and Inspection Panels	53.4
53-30	Frame Assemblies	53.5
53-31	Lower Frames	53.5
53-32	Hydraulic Servo Support Frame	53.9
53-33	Upper Frame	53.10
53-40	Tailcone Assembly	53.13
53-41	Inspection and Repair	53.15
53-50	Empennage Assembly	53.17
53-51	Vertical Stabilizer	53.18
53-52	Horizontal Stabilizer	53.19
53-53	Tail Rotor Guard	53.21
53-54	Tail Skid	53.22

Intentionally Blank

CHAPTER 53

FUSELAGE

53-00 Description

The R66 is a five-place, single main rotor, single engine helicopter constructed primarily of metal and equipped with skid type landing gear.

The primary fuselage structure is welded steel tubing and riveted aluminum sheet. The tailcone is a monocoque structure in which aluminum skins carry most primary loads. Fiberglass and thermoplastics are used in secondary cabin structure and in various ducts and fairings.

Several cowl doors provide access to the drive system, engine, engine oil tank, fuel filler cap, and fuel sump drain. A right-side door provides access to the main baggage compartment. Removable panels and cowlings allow additional access to controls and other components for maintenance.

The instrument console hinges up and aft for instrument and avionics access. The battery is installed behind an access panel under the left front seat, or in the main baggage compartment, depending on aircraft configuration.

The engine is located aft of the main baggage compartment. The engine compartment is isolated from the rest of the airframe by stainless steel firewalls in front of and above the engine.

53-10 Cabin Assembly

The cabin assembly is a non-field-replaceable assembly.

53-11 Repair

1. Vertical firewall replacement must be performed at the factory in a jig. Firewall repairs may be accomplished in accordance with U.S. FAA Advisory Circular 43.13-1B Section 4-59. Firewall material is 0.016 inch, type 301, one-quarter hard corrosion-resistant (CRES) steel.

2. Keel panel replacement must be performed at the factory in a jig. Keel panel repairs may be accomplished in accordance with U.S. FAA Advisory Circular 43.13-1B Sections 4-58 and 4-59. Keel panel material is 0.025 inch, 2024-T3 clad aluminum sheet.

3. To preserve crashworthiness, seat assembly maintenance is limited to replacement only.

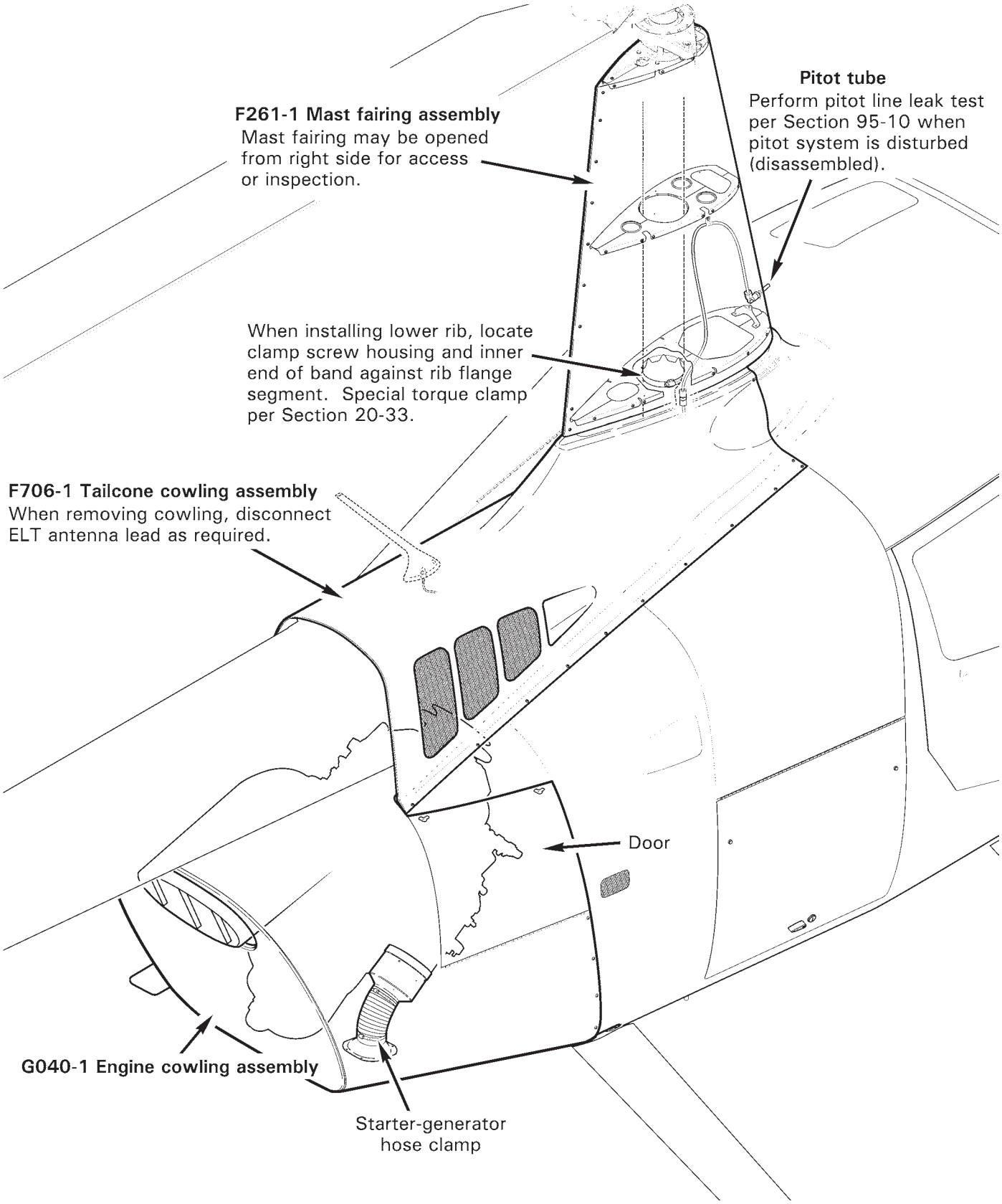

FIGURE 53-1 FAIRING, COWLINGS, AND PANELS

53-20 Fairing, Cowlings, and Panels

CAUTION

Mast fairing, cowlings, and panels must be installed for flight.

53-21 Engine Cowling

Refer to R66 Illustrated Parts Catalog (IPC) Figure 53-1.

A. Removal

1. Refer to Figure 53-1. Open G040-1 engine cowling assembly right and left doors.
2. Loosen clamp securing starter-generator hose to air inlet. Slide hose off of inlet.
3. Remove screws securing cowling to fuselage and remove cowling.

B. Installation

1. Refer to Figure 53-1. Support G040-1 engine cowling assembly, and install screws securing cowling to fuselage.
2. Slide starter-generator hose onto air inlet and tighten clamp. Close right and left doors.

53-22 Mast Fairing

Refer to R66 Illustrated Parts Catalog (IPC) Figure 53-3.

A. Opening and Closing

1. Refer to Figure 53-1. Remove right-side screws securing F261-1 mast fairing assembly at aft, vertical seam.
2. Remove right-side screws securing fairing to ribs. Keep fairing from springing open and minimize strain on nutplates by holding fairing closed until all right-side screws are removed. Slowly open fairing.
3. Hold fairing closed. Install right-side screws securing fairing to ribs, and screws securing fairing at aft, vertical seam.

B. Removal

1. Open mast fairing assembly per Section 53-22 Part A.
2. Disconnect (pitot system) 15-4-N-O union near G201-1 (servo support) frame assembly. Cap fitting and plug line.
3. Remove remaining screws securing fairing to ribs and remove fairing.

53-22 Mast Fairing (continued)

C. Installation

1. Refer to Figure 53-1. Install left-side screws securing F261-1 mast fairing assembly to ribs.

2. Remove cap and plug and connect (pitot system) 15-4-N-O union near G201-1 (servo support) frame assembly.

3. Hold fairing closed. Install right-side screws securing fairing to ribs, and screws securing fairing at aft, vertical seam.

4. Perform pitot line leak test per Section 95-10.

53-23 Tailcone Cowling

Refer to R66 Illustrated Parts Catalog (IPC) Figure 53-5.

A. Removal and Installation

1. Refer to Figure 53-1. Thru left access door, disconnect ELT antenna lead from antenna mounted to F706-1 tailcone cowling assembly, as required.

2. Remove screws securing cowling to fuselage and remove cowling.

3. Reinstall cowling and install screws securing cowling to fuselage.

4. Connect ELT antenna lead to cowling thru left access door, as required.

53-24 Access and Inspection Panels

Refer to Section 6-70 for access and inspection panel location and illustration.

53-30 Frame Assemblies

NOTE

See Section 54-40 for F237-1 tailcone attachment frame weldment replacement.

WARNING

R66 welded steel tube frames are stress relieved. Field weld repairs are not allowed; send frames to RHC for repair.

53-31 Lower Frames

Refer to R66 Illustrated Parts Catalog (IPC) Figure 53-7.

A. Removal

1. Remove engine per Section 71-10.
2. Refer to Figure 53-2.
   a. F046-1 (LH) only: Remove hardware securing power turbine governor control cable clamps, F723-3 line assembly clamp, and firewall clamp to F046-1 lower frame.
   b. F046-2 (RH) only: Remove hardware securing battery cable harness clamp, external power block, and firewall clamp to F046-2 lower frame.
3. Remove hardware securing clamps to firewall securing F049-03 harness assembly, as required. Cut and discard ty-raps as required, mark wires, and disconnect wires at plastic connectors to liberate frame.
4. Using plastic scraper, remove sealant around frame weldment(s) at firewalls.
5. Support tailcone (until frames are reinstalled).
   a. F046-1 (LH) only: Remove hardware securing frame to F574-5 block (access bolt thru G246-1 brace, inside baggage compartment). Remove hardware securing shackle and frame to F574-8 block (threaded).
   b. F046-2 (RH) only: Remove hardware securing frame to F574-1 support assembly (access bolts from inside baggage compartment).
6. Remove hardware securing F174-1 support weldment rod end(s) to F046 lower frame(s).
7. Remove two bolts and associate hardware securing F020-1 frame weldment, firewall, and F046 lower frame.
8. Remove hardware securing F046 lower frame to F574-10 block assembly (threaded). Remove lower frame.

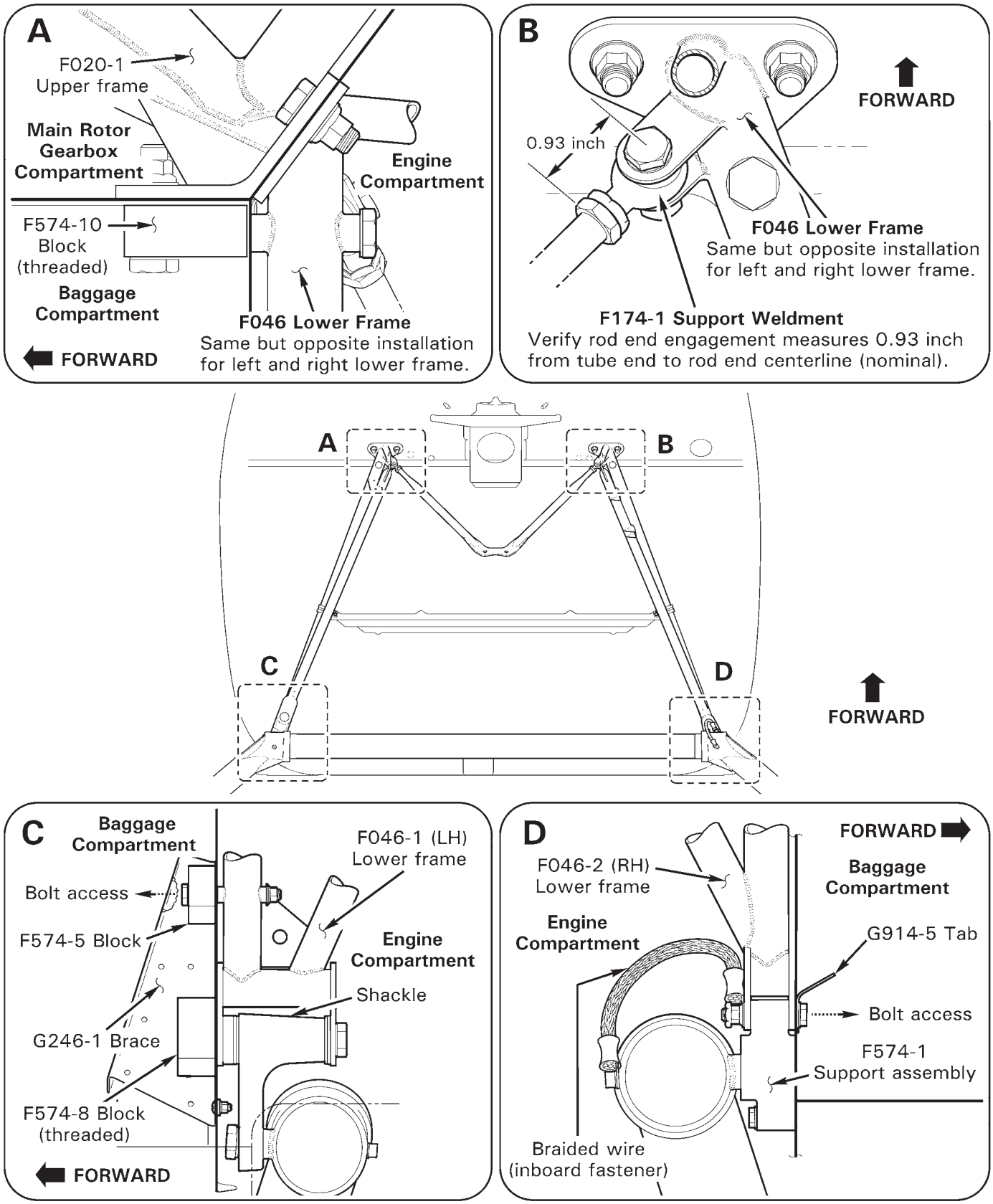

FIGURE 53-2 LOWER FRAMES

53-31 Lower Frames (continued)

B. Installation

1. Refer to Figure 53-2.

   a. F046-1 (LH) only: Install hardware securing shackle and frame to F574-8 block (threaded). Special torque bolt per Section 20-33, and torque stripe per Figure 5-1. Install hardware securing frame to F574-5 block (insert bolt thru G246-1 brace, inside baggage compartment). Standard torque bolt per Section 20-32, and torque stripe per Figure 5-1.

   b. F046-2 (RH) only: Install hardware, and G914-5 tab, securing frame to F574-1 support assembly (access bolts from inside baggage compartment). Remove finish from surface under braided wire terminal. Standard torque bolts per Section 20-32, and torque stripe per Figure 5-1.

2. Install hardware securing F046 lower frame to F574-10 block assembly (threaded). Install hardware securing F020-1 frame weldment, firewall, and F046 lower frame. Standard torque bolts per Section 20-32, and torque stripe per Figure 5-1.

3. Verify rod end engagement in F174-1 support weldment is approximately 0.93 inch from tube end to rod end centerline on each side (nominal). Adjust rod ends as required per Section 5-33, and Figures 5-1 & 5-2. Install hardware securing weldment to lower frames, standard torque bolts per Section 20-32, and torque stripe per Figure 5-1. Remove tailcone support.

4. Seal around frame weldment(s) at firewalls using B270-1 sealant.

5. Connect F049-03 harness assembly wires at plastic connectors, install hardware securing clamps to firewall, and install ty-raps as required. Cinch ty-raps until snug without over-tightening, and trim tips flush with heads.

6. a. F046-1 (LH) only: Install hardware securing power turbine governor control cable clamps, F723-3 line assembly clamp, and firewall clamp to F046-1 lower frame. Standard torque hardware per Section 20-32, and torque stripe per Figure 5-1.

   b. F046-2 (RH) only: Install hardware securing battery cable harness clamp, external power block, and stiffener clamp to F046-2 lower frame. Standard torque hardware per Section 20-32, and torque stripe per Figure 5-1.

7. Install engine per Section 71-10.

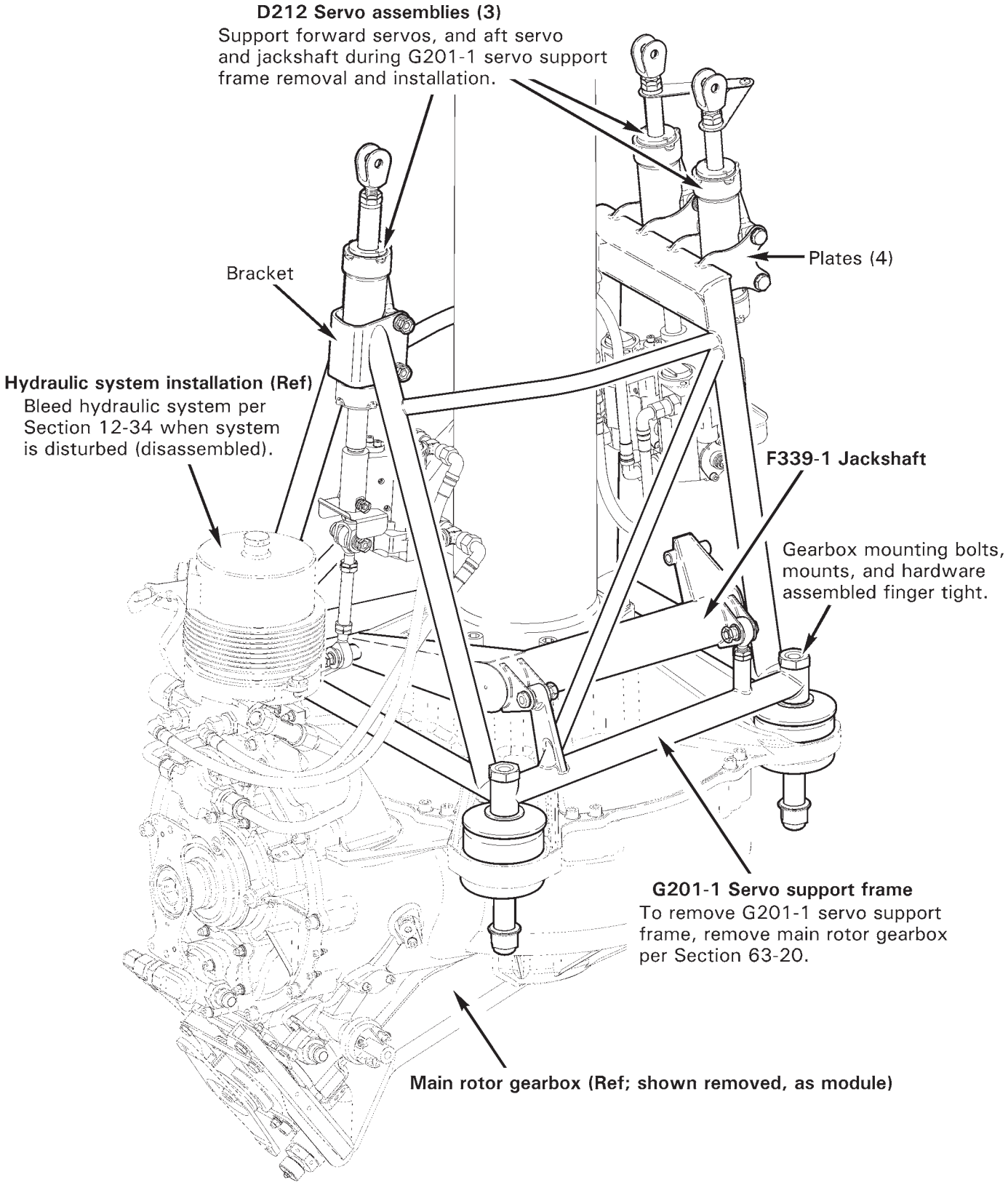

FIGURE 53-3 HYDRAULIC SERVO SUPPORT FRAME

53-32 Hydraulic Servo Support Frame

Refer to R66 Illustrated Parts Catalog (IPC) Figure 67-19.

A. Removal

1. Remove main rotor gearbox per Section 63-20.
2. Remove main rotor hub per Section 62-20.
3. Remove mast fairing per Section 53-22.
4. Remove swashplate assembly per Section 67-40.
5. Refer to Figure 53-3. Tag F121-3 push-pull tube assemblies with corresponding D212 servo assembly, and tag servos with location on G201-1 servo support frame. Remove hardware securing push-pull tubes to servos.
6. Remove hardware securing F339-1 jackshaft weldment to frame.
7. Remove hardware securing servos to frame forward plates and aft bracket. Support forward servos, and aft servo and jackshaft, during hardware removal.
8. Remove gearbox mounting bolts, mounts, and hardware. Lift frame off of gearbox, over mast assembly.

B. Installation

1. Refer to Figure 53-3. Lower G201-1 servo support frame over mast assembly, onto main rotor gearbox. Install gearbox mounting bolts, mounts, and hardware. Install nuts finger tight.
2. Remove tags and install hardware securing D212 servo assemblies to frame forward plates and aft bracket. Standard torque bolts per Section 20-32, and torque stripe per Figure 5-1.
3. Install hardware securing F339-1 jackshaft weldment to frame. Standard torque bolts per Section 20-32, and torque stripe per Figure 5-1.
4. Install F121-3 push-pull tube assemblies as removed. Standard torque bolts per Section 20-32, and torque stripe per Figure 5-1.
5. Install swashplate assembly per Section 67-40.
6. Install mast fairing per Section 53-22.
7. Install main rotor hub per Section 62-20.
8. Install main rotor gearbox per Section 63-20.

53-33 Upper Frame

Refer to R66 Illustrated Parts Catalog (IPC) Figure 53-11 and 53-11B.

A. Removal

1. Remove main rotor blades per Section 62-10.
2. Remove tailcone assembly per Section 53-40.
3. Remove tail rotor drive shaft weldment per Section 65-10.
4. Remove hardware securing F236-1 scroll assembly to F306-1 box assembly. Remove hardware securing box to firewall.
5. Remove hardware securing F252-1 strut to F020-1 upper frame and remove strut.
6. Remove air filter and cage assembly per Section 71-22. Disconnect air bypass switch assembly wiring at connector and remove hardware securing G258-4 strap to fuel bladder support assembly.
7. Remove engine shaft weldment per Section 63-10.
8. Remove engine per Section 71-10.
9. Remove main rotor gearbox per Section 63-20, steps 2 thru 12.
10. Cut and discard ty-raps securing wires and antenna cables to frame, as required.
11. Disconnect D205-19 hose assembly and F724-1 line assembly from F823-1 thermostat assembly. Plug hose and line and cap fittings. Remove hardware securing F651-1 oil filter assembly to frame.
12. Remove hardware securing F231-8 braces to fuel bladder support, and to frame.
13. Remove hardware securing rotor brake cable assembly to frame. Remove hardware securing B157-1 (pulley) mount to frame.
14. Remove ELT transmitter per Section 25-61, if installed. Remove hardware securing clamps to upper frame and remove clamps.
15. Remove palnut, nut, and spacer securing F316-1 bellcrank assembly to upper frame, and slide C494-2 shaft inboard until it clears frame. Remove fastener securing A331-4 bellcrank assembly to upper frame and swing bellcrank clear of frame.
16. Remove fasteners securing upper frame to horizontal firewall.
17. Using plastic scraper, remove sealant around frame weldment edges at firewalls, cabin bulkhead, and fuel bladder support.
18. Remove mounting hardware securing upper frame to firewalls, bulkhead, and support and remove frame.

53-33 Upper Frame (continued)

B. Installation

1. Position F020-1 upper frame inside helicopter. Install mounting hardware securing upper frame to firewalls, cabin bulkhead, and fuel bladder support assembly. Standard torque bolts per § 20-32, and torque stripe per Figure 5-1. Seal around frame weldment edges at firewalls, bulkhead, and support using B270-1 sealant.

2. Install fasteners securing upper frame to horizontal firewall. Standard torque hardware per § 20-32, and torque stripe per Figure 5-1.

3. Install hardware securing A331-4 bellcrank assembly to upper frame. Standard torque bolt per § 20-32, and torque stripe per Figure 5-1. Slide C494-2 shaft outboard thru F316-1 bellcrank assembly and upper frame and install spacer, nut, and palnut. Special torque nut per § 20-33, and torque stripe per Figure 5-1.

4. Install ELT transmitter per § 25-61, if installed. Install clamps and hardware securing clamps to upper frame.

5. Install B157-1 (pulley) mount and hardware securing mount to frame. Install hardware securing rotor brake cable assembly to frame.

6. Install F231-8 braces and hardware securing braces to fuel bladder support, and to frame.

7. Install hardware securing F651-1 oil filter assembly to frame. Standard torque hardware per § 20-32, and torque stripe per Figure 5-1. Remove caps and plugs and connect D205-19 hose assembly and F724-1 line assembly to F823-1 thermostat assembly. Standard torque hose assembly nuts per § 20-32, special torque line assembly nuts per § 20-33, & torque stripe per Figure 5-1.

8. Install MS3367-4-9 or -5-9 ty-raps as required to secure wire harness & cables to frame. Cinch ty-raps until snug without over-tightening, & trim tips flush with heads.

9. Install main rotor gearbox per § 63-20, but do not install F252-1 strut until step 13.

10. Install engine per § 71-10.

11. Install engine shaft weldment per § 63-10.

12. Install air filter and cage assembly per § 71-22. Install hardware securing G258-4 strap to fuel bladder support and connect air bypass switch assembly wiring at connector.

13. Install hardware securing F252-1 strut to F020-1 upper frame. Standard torque bolts per § 20-32, and torque stripe per Figure 5-1.

14. Install F306-1 box assembly and hardware securing box to firewall. Install F236-1 scroll assembly and hardware securing scroll to box.

15. Install tail rotor drive shaft weldment per § 65-10.

16. Install tailcone assembly per § 53-40.

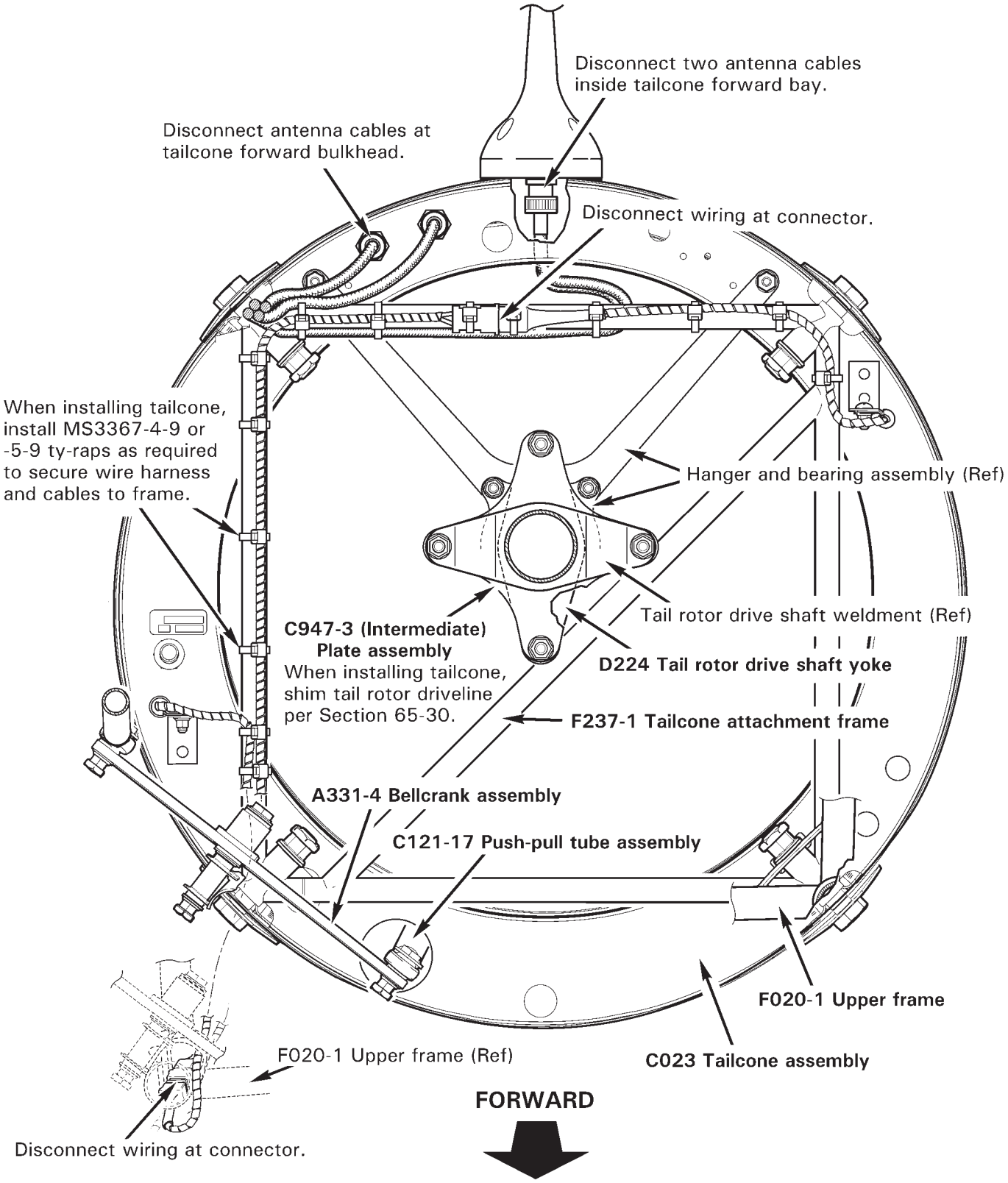

FIGURE 53-4 TAILCONE ASSEMBLY

53-40 Tailcone Assembly

Refer to R66 Illustrated Parts Catalog (IPC) Figure 53-15.

A. Removal

1. Remove tailcone cowling assembly per § 53-23. Remove engine cowling assembly per § 53-21.

2. Refer to Figure 53-4. Cut and discard ty-raps as required and disconnect tailcone wiring at connectors. Disconnect two antenna cables inside tailcone forward bay, and cables at forward bulkhead, as required.

3. Remove hardware securing D224 tail rotor drive shaft yoke to C947-3 (intermediate) plate assembly, noting hardware removed.

4. Remove hardware securing C121-17 push-pull tube to A331-4 bellcrank assembly.

5. Remove hardware securing C023 tailcone assembly to frames and remove tailcone.

6. Cut and discard ty-raps as required and remove F237-1 tailcone attachment frame, as required.

B. Installation

1. Refer to Figure 53-4. Install F237-1 tailcone attachment frame, if not previously accomplished. Verify correct damper assembly orientation per Figure 65-3.

2. Position C023 tailcone assembly on F020-1 upper frame assembly; do not pinch wiring between tailcone bulkhead and frames. Install hardware securing tailcone to frames, standard torque bolts per Section 20-32, and torque stripe per Figure 5-1.

3. Install hardware securing D224 tail rotor drive shaft yoke to C947-3 (intermediate) plate assembly. Shim tail rotor driveline per § 65-30. Standard torque bolts per § 20-32, and torque stripe per Figure 5-1.

4. Install hardware securing C121-17 push-pull tube to A331-4 bellcrank assembly. Standard torque bolt per § 20-32, and torque stripe per Figure 5-1.

5. Perform tail rotor drive shaft runout per § 65-21.

6. Connect tailcone wiring at connectors, connect two antenna cables inside tailcone forward bay, and connect antenna cables at forward bulkhead, as required. Individually test and verify correct function of tail position light, strobe, and TR chip light circuits.

7. Install MS3367-4-9 or -5-9 ty-raps as required to secure wire harness and cables to frame. Cinch ty-raps until snug without over-tightening, and trim tips flush with heads.

8. Install tailcone cowling assembly per § 53-23. Install engine cowling assembly per § 53-21.

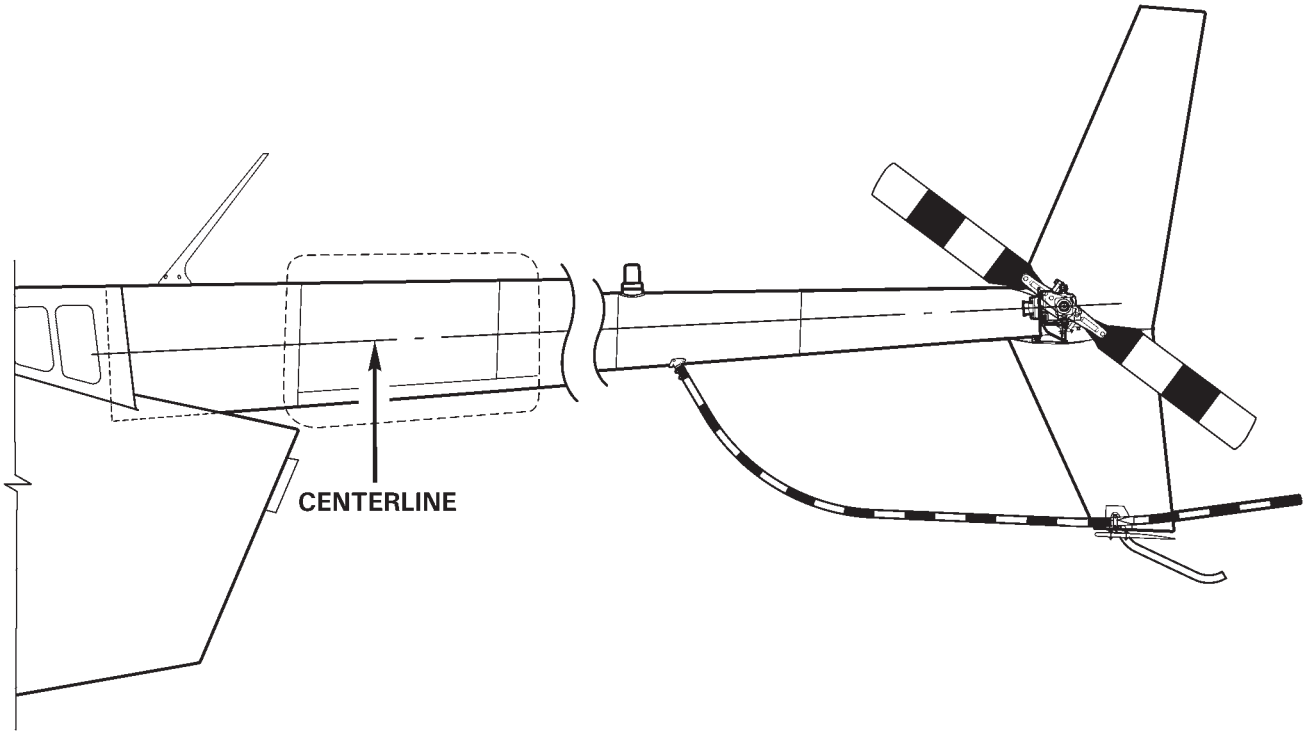

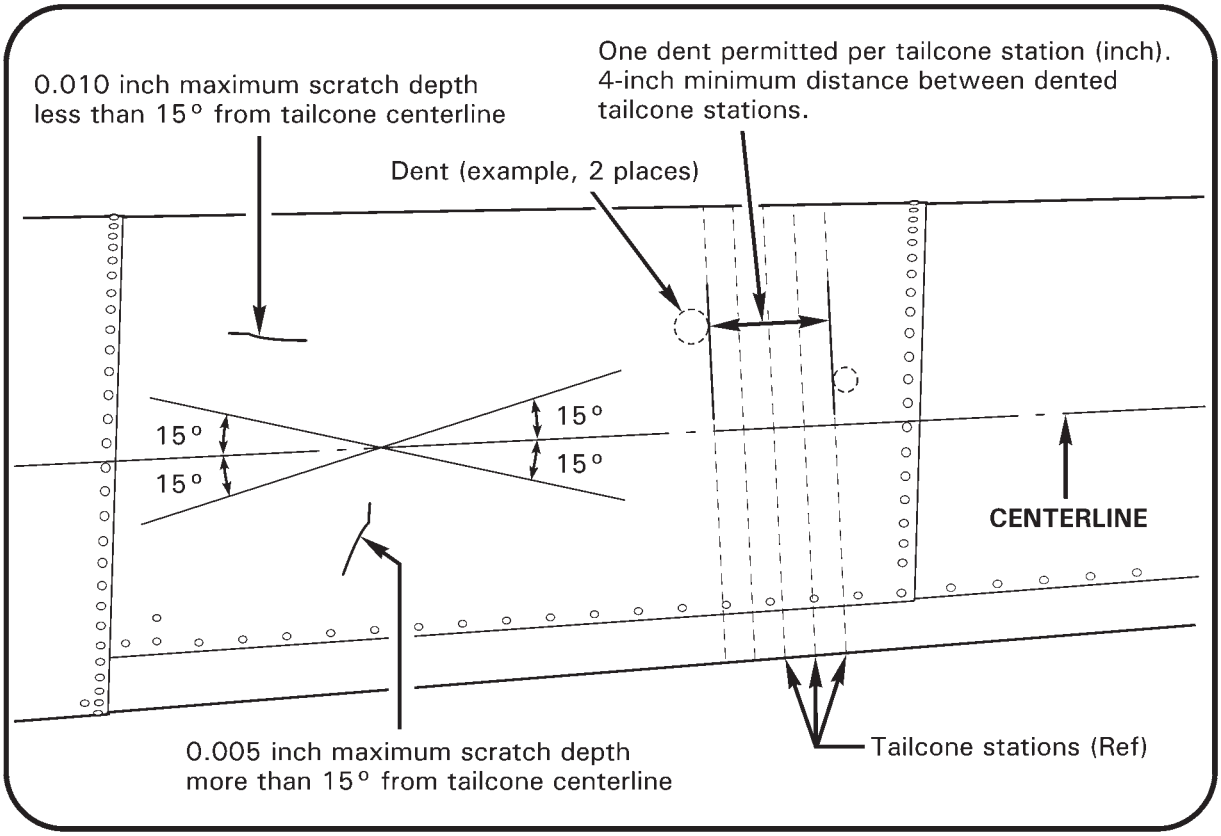

FIGURE 53-5 TAILCONE INSPECTION AND REPAIR

53-41 Inspection and Repair

This procedure outlines the inspection criteria and repair limits for the tailcone assembly. Repairs are limited to blending out scratches and refinishing skins. Contact RHC Technical Support if allowable damage is exceeded.

A. Scratches

1. Refer to Figure 53-5. Verify damage does not exceed the following limits:

   a. 0.005 inch maximum scratch depth more than 15° from tailcone centerline.
   b. 0.010 inch maximum scratch depth less than 15° from tailcone centerline.

2. If damage exceeds limits, return tailcone assembly to RHC for repair. If damage is within limits, blend out scratches with a 0.10 inch minimum blend radius. Refinish skins using approved materials per Section 20-70.

B. Dents

1. Refer to Figure 53-5. Smooth, round bottom dents with 0.125 inch minimum radius without sharp nicks or cracks are acceptable when damage does not exceed the following limits:

   a. 0.030 inch maximum dent depth.
   b. 1.250 inch maximum dent diameter.
   c. One dent permitted per tailcone station (inch).
   d. 4.000 inch minimum distance between dented tailcone stations.

2. If damage exceeds limits, replace tailcone or return to RHC for repair.

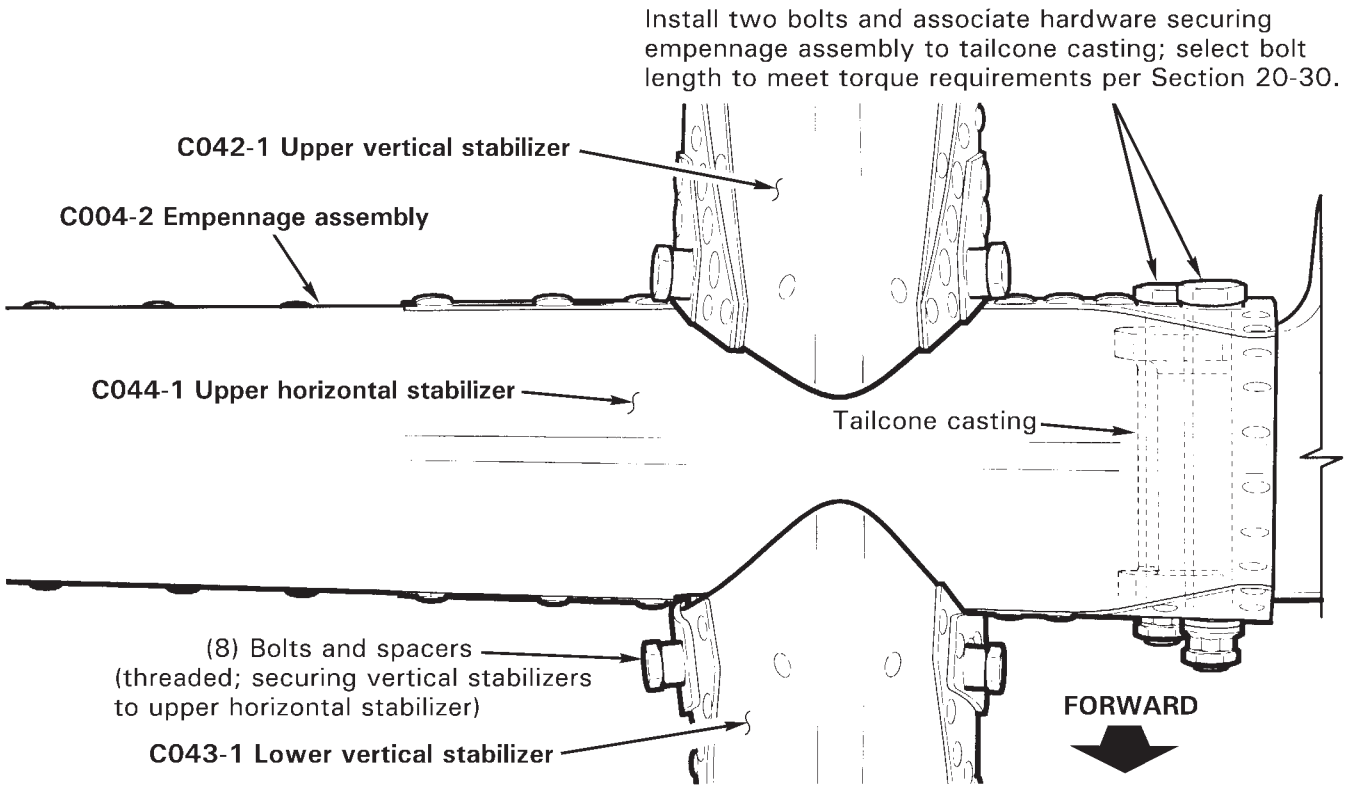

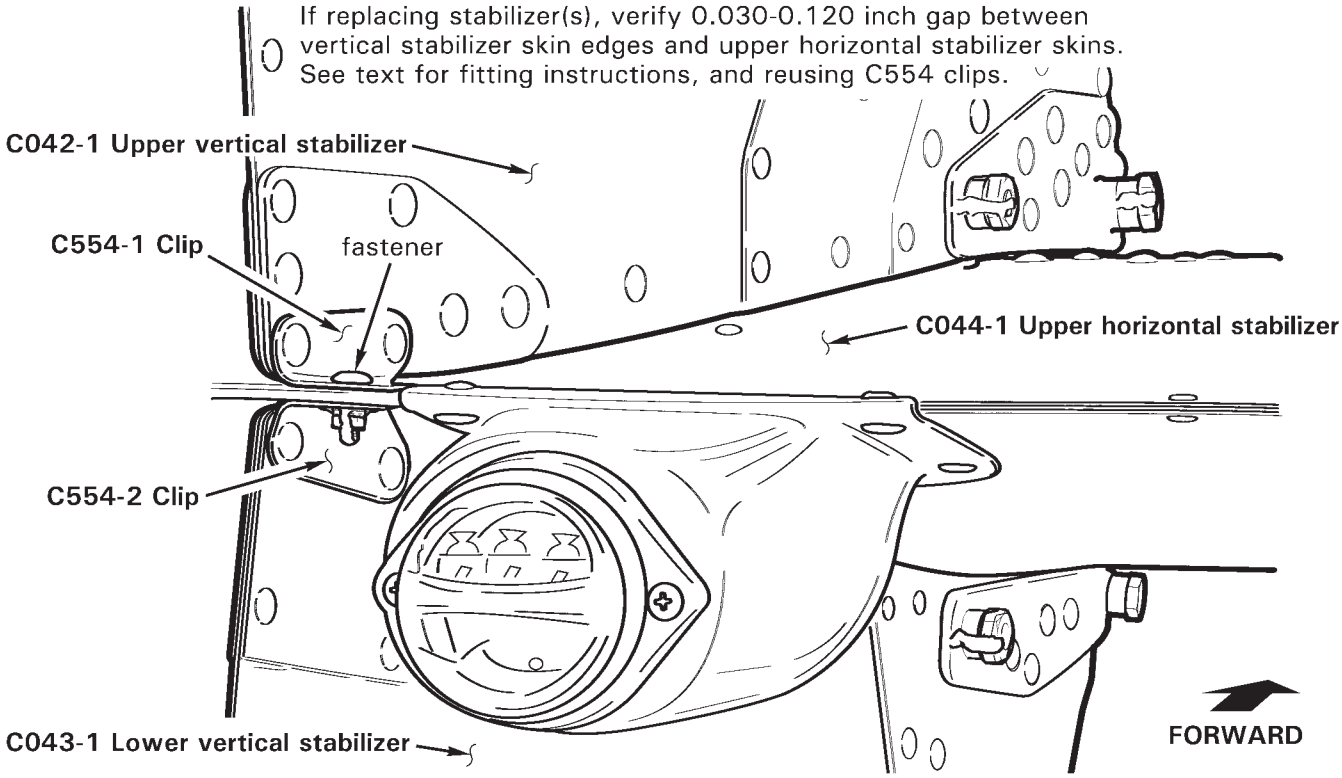

FIGURE 53-6 EMPENNAGE - TAILCONE CASTING

53-50 Empennage Assembly

A. Removal

1. Remove tail rotor guard assembly per § 53-53.
2. Remove hardware securing forward MS21919WDG3 clamp to upper horizontal stabilizer. Cut and discard ty-raps securing position light and gearbox chip detector wires and connectors together. Disconnect position light at connectors.
3. Refer to Figure 53-6. Support C004-2 empennage assembly, remove two bolts and associate hardware securing assembly to tailcone casting, and remove assembly.

B. Installation

1. Refer to Figure 53-6. Position C004-2 empennage assembly on tailcone casting. Install two bolts and associate hardware securing assembly to casting; select bolt length to meet torque requirements per § 20-30. Standard torque bolts per §20-32, and torque stripe per Figure 5-1.
2. Connect position light wire connectors. Secure wires and install hardware securing forward MS21919WDG3 clamp to upper horizontal stabilizer. Install MS3367-4-9 or -5-9 ty-raps as required to secure wires and connectors together. Cinch ty-raps until snug without over-tightening, and trim tips flush with heads.
3. Test and verify correct function of position and TR chip light circuits.
4. Install tail rotor guard assembly per § 53-53.

C. Repair

A single dent on the C044-1 stabilizer leading edge outboard of the vertical stabilizers is permitted provided:

1. Dent is no more than 0.050 inch deep.
2. Dent must have a smooth bottom, with minimum 0.125-inch radius, and no sharp nicks or cracks.
3. Dent must be less than 1.25 inches spanwise.

It is permissible to remove above dent via metalworking.

Depending on the damage, U.S. FAA AC 43.13-1B may be used to repair some horizontal stabilizer minor skin damage; refer to the AC's Title Page for limitations. Damage to spars, and either forward or middle attachment for vertical stabilizers, is not field repairable.

To inspect spars, remove NAS1919B04S01 rivets securing D292-3 outboard rib. Only the inboard D292-2 nose rib or D292-3 outboard tip rib may be field replaced; all other parts require use of the factory jig.

53-51 Vertical Stabilizer

A. Upper Vertical Stabilizer Removal

1. Refer to Figure 53-6. Remove fastener securing vertical stabilizer C554 clips to upper horizontal stabilizer trailing edge.
2. Support C042-1 upper vertical stabilizer. Remove four bolts (threaded) and spacers securing C042-1 stabilizer to upper horizontal stabilizer, and remove C042-1 stabilizer.
3. If replacing stabilizer, C554-1 clip may be reused. Drill out two rivets securing clip to stabilizer.

B. Upper Vertical Stabilizer Installation

1. Refer to Figure 53-6. Position C042-1 stabilizer on empennage. Verify 0.030-0.120 inch gap between C042-1 stabilizer skin edges and upper horizontal stabilizer skins. File vertical stabilizer skin edge(s) as required.
2. Install four bolts (threaded) and spacers securing C042-1 stabilizer to upper horizontal stabilizer. Special torque bolts per § 20-33 and torque stripe per Figure 5-1.
3. Install fastener securing C554 clips to upper horizontal stabilizer trailing edge. (If reusing C554-1 clip, install clip and fastener, and match drill clip to vertical stabilizer with #30 drill. Deburr holes and install rivets.) Torque stripe fastener per Figure 5-1.

C. Lower Vertical Stabilizer Removal

1. Remove tail rotor guard assembly per § 53-53.
2. Remove aux stabilizer assembly per § 53-52, and tail skid per § 53-54, as required.
3. Refer to Figure 53-6. Remove fastener securing C554 clips to upper horizontal stabilizer trailing edge.
4. Support C043-1 lower vertical stabilizer. Remove four bolts (threaded) and spacers securing C043-1 stabilizer to upper horizontal stabilizer, and remove C043-1 stabilizer.
5. If replacing stabilizer, C554-2 clip may be reused. Drill out two rivets securing clip to stabilizer.

D. Lower Vertical Stabilizer Installation

1. Refer to Figure 53-6. Position C043-1 stabilizer on empennage. Verify 0.030-0.120 inch gap between C043-1 stabilizer skin edges and upper horizontal stabilizer skins. File vertical stabilizer skin edge(s) as required.
2. Install four bolts (threaded) and spacers securing C043-1 stabilizer to upper horizontal stabilizer. Special torque bolts per § 20-33 and torque stripe per Figure 5-1.
3. Install fastener securing C554 clips to upper horizontal stabilizer trailing edge. (If reusing C554-2 clip, install clip and fastener, and match drill clip to vertical stabilizer with #30 drill. Deburr holes and install rivets.) Torque stripe fastener per Figure 5-1.
4. Install aux stabilizer assembly per § 53-52, and tail skid per § 53-54, as required.
5. Install tail rotor guard assembly per § 53-53.

53-52 Horizontal Stabilizer

Refer to R66 Illustrated Parts Catalog (IPC) Figure 53-29.

A. Upper Horizontal Stabilizer Assembly Removal

1. Remove upper vertical stabilizer assembly and lower vertical stabilizer assembly per § 53-51.

2. Remove hardware securing forward clamp to upper horizontal stabilizer assembly. Cut and discard ty-raps securing position light and gearbox chip detector wires and connectors together. Disconnect position light at connectors.

3. Support upper horizontal stabilizer, remove two bolts and associate hardware securing stabilizer to tailcone casting, and remove assembly.

B. Upper Horizontal Stabilizer Assembly Installation

1. Position upper horizontal stabilizer assembly on tailcone casting. Install two bolts and associate hardware securing stabilizer to casting; select bolt length to meet torque requirements per § 20-30. Standard torque hardware per § 20-32, and torque stripe per Figure 5-1.

2. Install upper vertical stabilizer assembly and lower vertical stabilizer assembly per § 53-51.

3. If C044-1 stabilizer was replaced, match drill C554 clips 0.144-inch diameter hole through trailing edge of horizontal stabilizer. Deburr hole and install fastener.

4. Connect position light at connectors. Install hardware securing forward clamp to upper horizontal stabilizer. Install MS3367-4-9 or -5-9 ty-raps as required to secure position light and gearbox chip detector wires and connectors together. Cinch ty-raps until snug without over-tightening, and trim tips flush with heads.

5. Test and verify correct function of position and TR chip light circuits.

C. Lower Horizontal Stabilizer Assembly Removal

1. Remove tail skid per § 53-54.

2. Refer to Figure 53-7. Using plastic scraper, remove sealant around edges where lower horizontal stabilizer assembly brackets attach to lower vertical stabilizer assembly doublers. Remove lower horizontal stabilizer assembly.

D. Lower Horizontal Stabilizer Assembly Installation

1. Refer to Figure 53-7. Position lower horizontal stabilizer assembly on lower vertical stabilizer assembly and install tail skid per § 53-54.

2. Seal lower horizontal stabilizer bracket edges to lower vertical stabilizer doublers using B270-1 sealant.

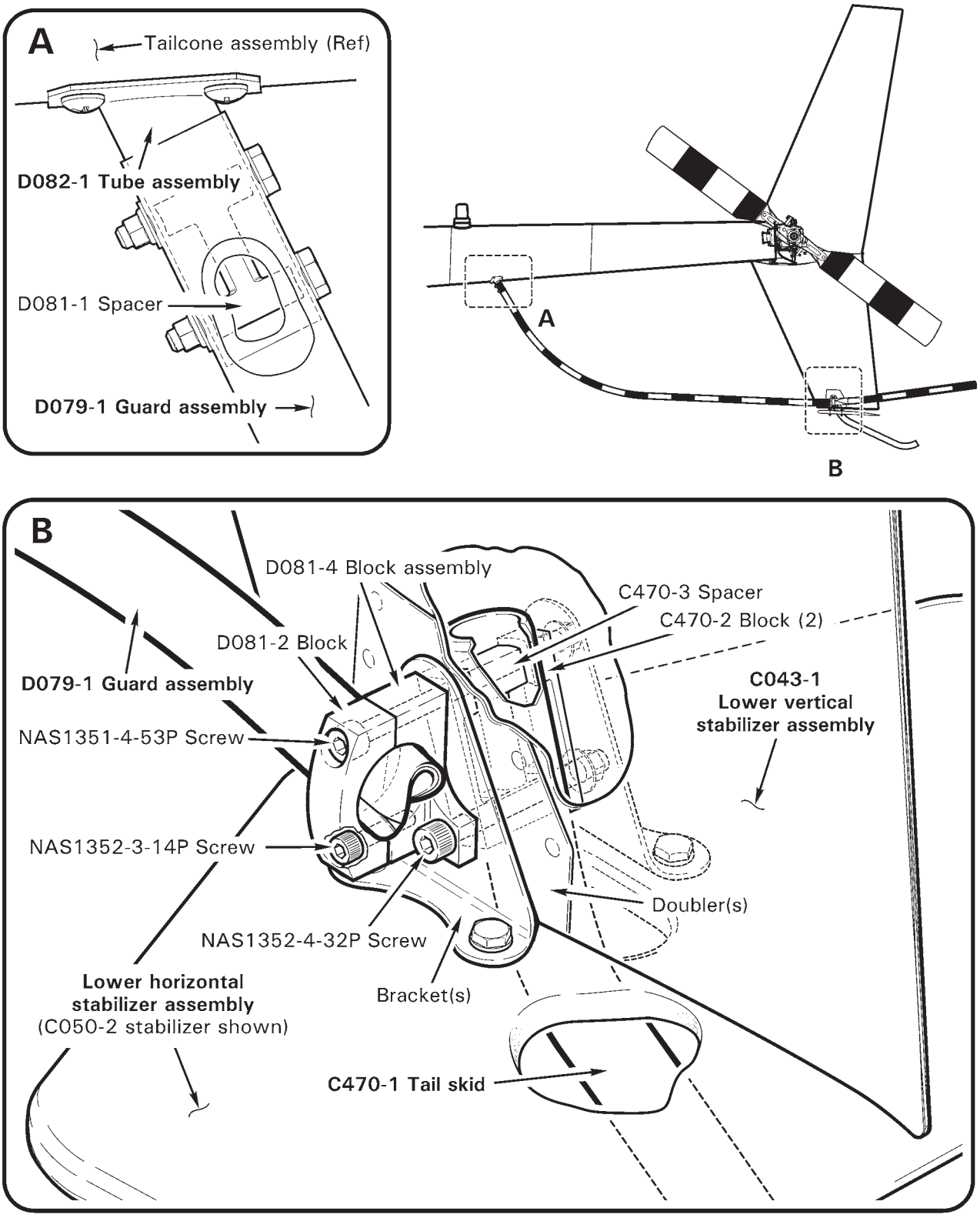

FIGURE 53-7 EMPENNAGE - TAIL ROTOR GUARD

53-53 Tail Rotor Guard

Refer to R66 Illustrated Parts Catalog (IPC) Figures 53-25 and 53-29.

A. Removal

1. Refer to Figure 53-7. Loosen two (forward) fasteners securing D081-2 block and D079-1 guard assembly to C043-1 lower vertical stabilizer.

2. Remove hardware securing guard to D082-1 tube assembly. Slide guard off of tube, then forward through blocks. Remove D081-1 spacer from tube.

B. Installation

CAUTION

Do not install D079-1 revision U or prior tail rotor guard assembly on R66 helicopters.

1. Refer to Figure 53-7. Loosen two (forward) fasteners securing D081-2 block to C043-1 lower vertical stabilizer, if not previously accomplished. Insert D079-1 guard assembly aft through blocks.

2. Lightly coat retaining hardware and mating surfaces of D082-1 tube assembly and D079-1 guard assembly with approved primer per § 20-70, prior to installation.

3. Install D081-1 spacer inside tube. While wet with primer, slide guard onto tube and install hardware. Standard torque bolts per § 20-32, and torque stripe per Figure 5-1. Seal around end of guard with primer after assembly.

4. Verify D081 blocks clamp guard sleeve. For proper guard-to-stabilizer clamping, first standard torque (forward, top) NAS1351-4-53P screw and associate hardware per § 20-32, then special torque (forward, bottom) NAS1352-3-14P screw and associate hardware per § 20-33. Torque stripe fasteners per Figure 5-1.

53-54 Tail Skid

Refer to R66 Illustrated Parts Catalog (IPC) Figures 53-25.

A. Removal

1. Refer to Figure 53-7. Support D079-1 guard assembly. Remove hardware securing D081-2 block to C043-1 lower vertical stabilizer and remove block.

2. Support C050-2 aux stabilizer assembly and C470-1 tail skid. Remove hardware securing D081-4 block assembly to C043-1 stabilizer and remove block assembly.

3. Remove C470-1 tail skid, two C470-2 blocks, and remove C470-3 spacer from skid. Support guard and C050-2 stabilizer while hardware is removed.

B. Installation

1. Refer to Figure 53-7. Install C470-3 spacer inside C470-1 tail skid. Install tail skid and two C470-2 blocks inside C043-1 lower vertical stabilizer. Install D081-4 block assembly, and install hardware securing block assembly to stabilizer. Standard torque screw per § 20-32, and torque stripe per Figure 5-1.

2. Install D081-2 block, and hardware securing block to stabilizer. Verify D081 blocks clamp guard sleeve. For proper guard-to-stabilizer clamping, first standard torque (forward, top) NAS1351-4-53P screw and associate hardware per § 20-32, then special torque (forward, bottom) NAS1352-3-14P screw and associate hardware per § 20-33. Torque stripe fasteners per Figure 5-1.

CHAPTER 62

MAIN ROTOR

Section	Title	Page
62-00	Description	62.1
62-10	Main Rotor Blades	62.1
	62-11 Blade Boots	62.6
62-20	Main Rotor Hub	62.7
	62-21 Bearing Replacement	62.9
62-30	Main Rotor Assembly	62.11
	62-31 Journal and Shim Calculations	62.11
	62-32 Adjusting Hinge Friction	62.15
	62-33 Drilling Nuts and Bolts	62.17
62-40	Inspection of Main Rotor Blades	62.19
	62-41 Scratches and Corrosion	62.19
	62-42 Dents	62.21
	62-43 Spar Damage	62.23
	62-44 Root Fitting Damage	62.23
	62-45 Nicks and Notches	62.23
	62-46 Voids and Debonds	62.25
62-50	Repair of Main Rotor Blades	62.27
	62-51 Sealing, Filling, and Fairing	62.27
	62-52 Painting	62.28

Intentionally Blank

CHAPTER 62

MAIN ROTOR

62-00 Description

The main rotor has two all-metal blades and a forged-aluminum hub. Blades mount to the hub by coning hinge; the hub mounts to the main rotor shaft by teeter hinge. Coning and teeter hinges have self-lubricated bearings inside the hub.

The leading edge of the main rotor blade is a corrosion and erosion resistant stainless-steel spar. Aluminum skins are bonded to the spar approximately one inch aft of the leading edge, to the aluminum honeycomb core, and to the forged-aluminum root fitting.

Each blade has six pitch change bearings that attach to a forged, stainless-steel spindle. The bearings and part of the spindle are submerged in oil inside the root fitting housing. The housing is sealed with an elastic boot. The spindle tusk contacts an aluminum droop stop attached to the main rotor shaft, to minimize teetering when blades are at rest or turning at low RPM.

62-10 Main Rotor Blades

WARNING

Due to potentially destructive results, use of blade tape (anti-erosion tape) is prohibited.

A. Removal

Refer to Figure 62-1. Four people will be required to remove the blades. One person must support the blade approximately 2/3 its length from the root while another supports the root and removes or installs the attached bolt.

1. Mark one blade and its corresponding hinge nut & bolt, pitch link and rotor head location with a colored marker, such as a grease pencil and, mark as “X”. Using a different color marker, mark as “O”, on the other blade, nut, bolt, pitch link and rotor head location.

2. Disconnect pitch links from each main rotor blade.

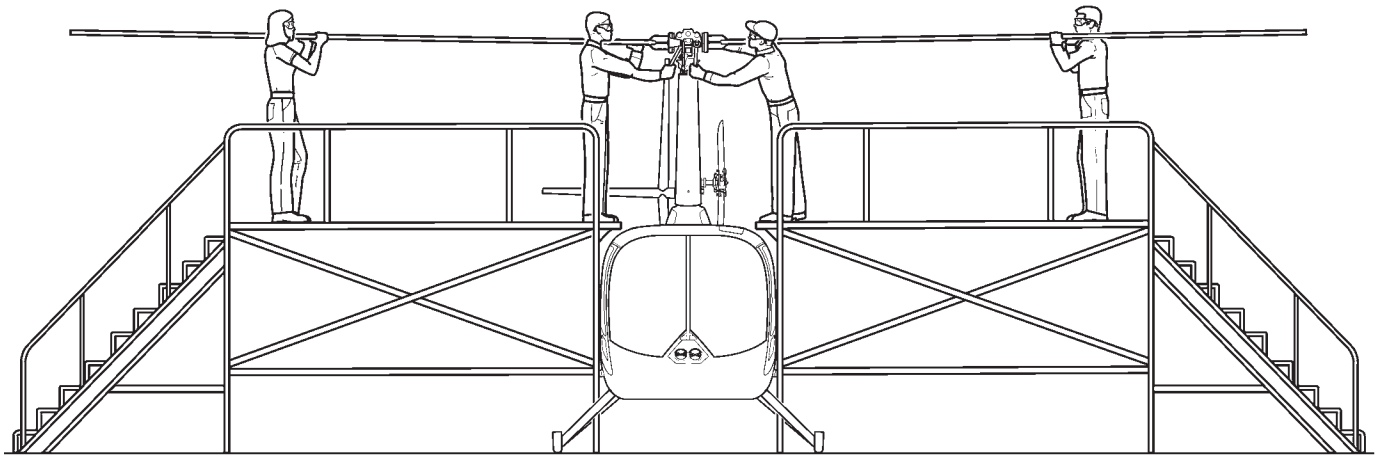

FIGURE 62-1 SUPPORTING MAIN ROTOR BLADES DURING BLADE REMOVAL OR INSTALLATION

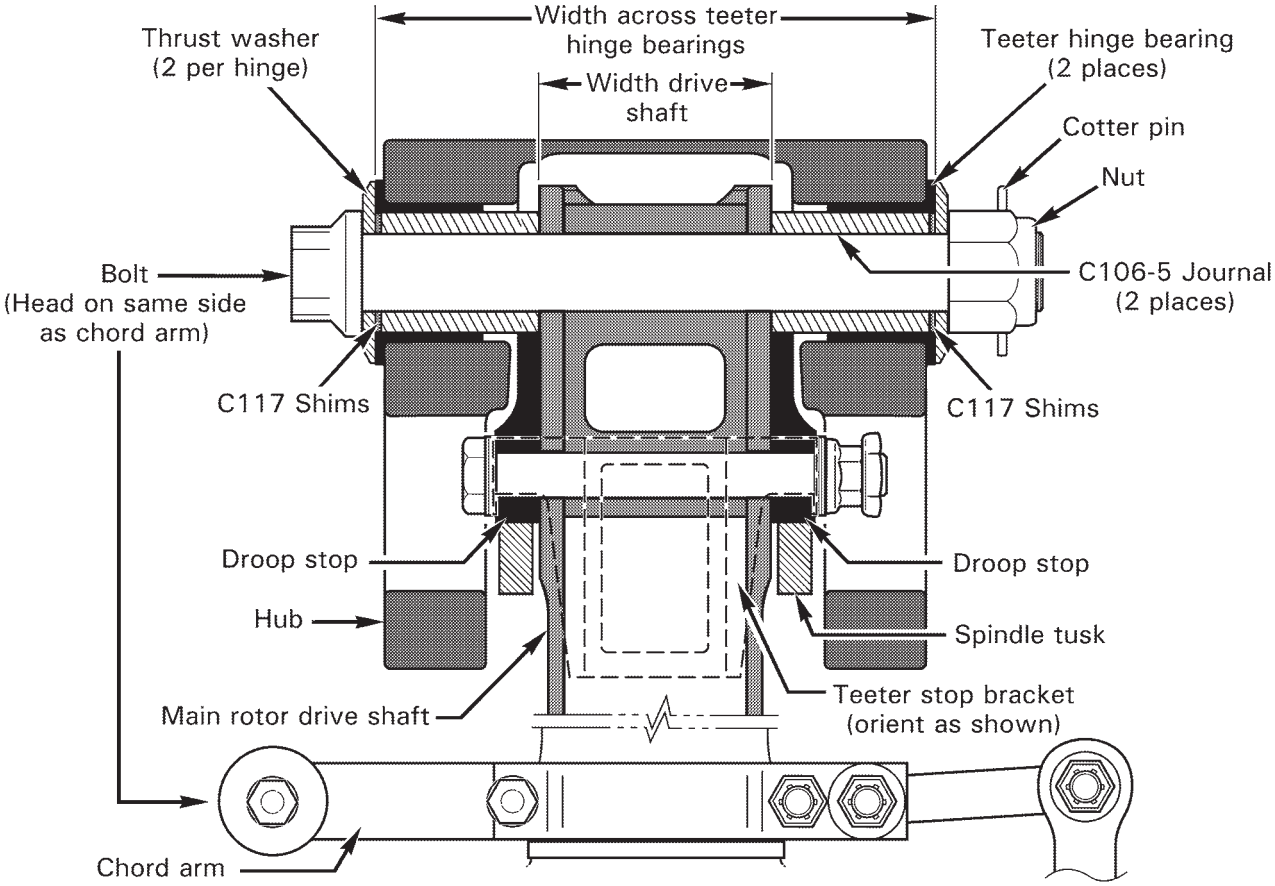

FIGURE 62-2 TEETER HINGE (HUB INSTALLATION)

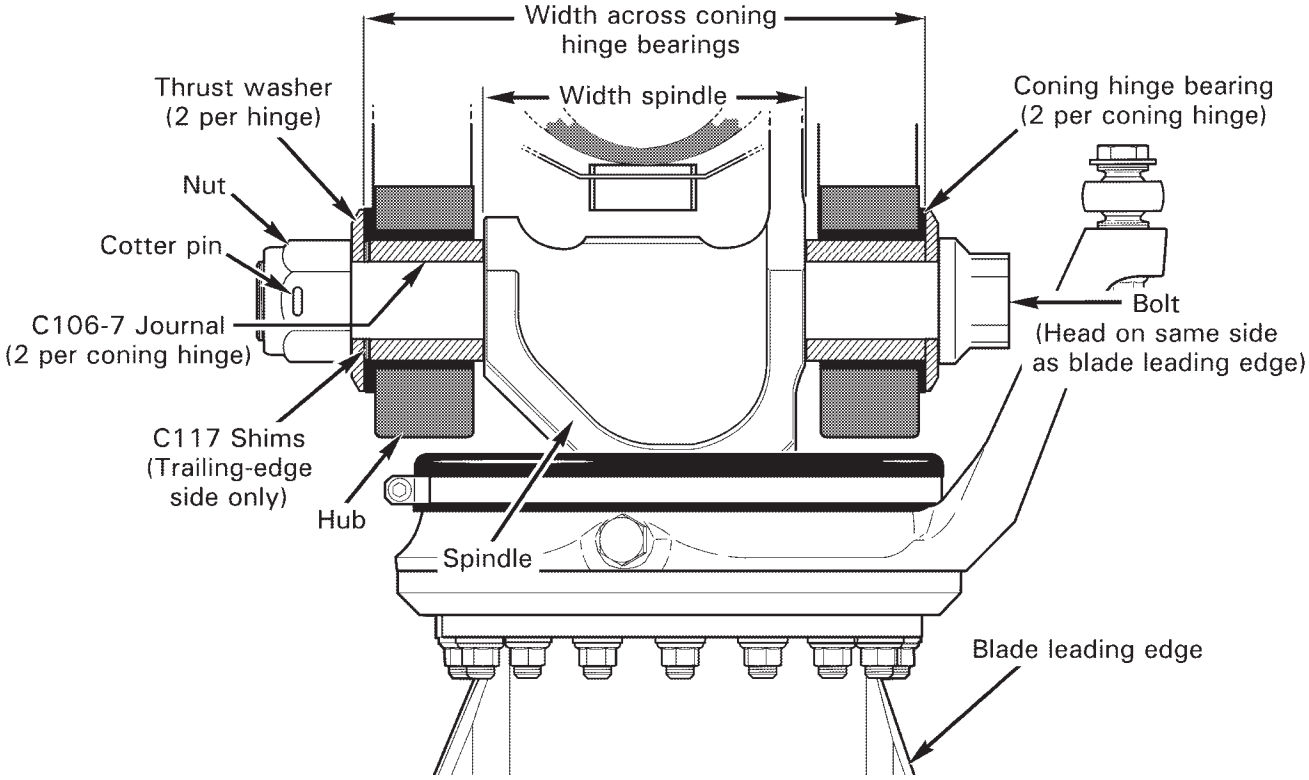

FIGURE 62-3 CONING HINGE (BLADE INSTALLATION)

62-10 Main Rotor Blades (continued)

A. Removal (continued)

3. Refer to Figure 62-3. Remove cotter pins and loosen nuts of blade coning hinge bolts so they are just finger tight.

4. Remove nut, thrust washer, and shims (if used) from trailing-edge side of one blade hinge bolt. Cone blade so spindle tusk no longer contacts droop stop. While supporting blade at root, carefully rotate pitch horn down and remove hinge bolt and thrust washer.

> NOTE
>
> Installation hardware is matched individually to each blade installation; carefully reinstall all attach hardware into rotor hub exactly as removed.

> **CAUTION**
>
> Support remaining main rotor blade in a level position during and after removal of opposite blade.

5. Store rotor blades on a cushioned surface to prevent damage to blade skins.

6. Repeat step 4 to remove remaining blade.

B. Installation

Refer to R66 Illustrated Parts Catalog (IPC) Figures 62-1, 62-3, and 62-5.

1. Verify correct teeter hinge friction per Section 62-32, step 4.

2. If previously installed information is unavailable, perform coning hinge journal and shim calculation per Section 62-31.

3. Refer to Figure 62-3. With rotor hub level, insert journals into coning hinge bearings. Install thrust washer on coning hinge bolt.

4. Position blade in hub until spindle hole aligns with journal bores, coning blade as required to keep tusk away from droop stop. Rotate pitch horn down and install hinge bolt at leading-edge side.

> NOTE
>
> To assist bolt installation, temporarily insert an old bolt from trailing-edge side to align spindle with journals.

5. Install trailing-edge shims (if used) and thrust washer and, prior to installing nut, coat bolt threads and nut face with A257-9 anti-seize compound.

> NOTE
>
> Do not allow anti-seize compound to contact journals or hub bearing areas. These areas must be clean and dry.

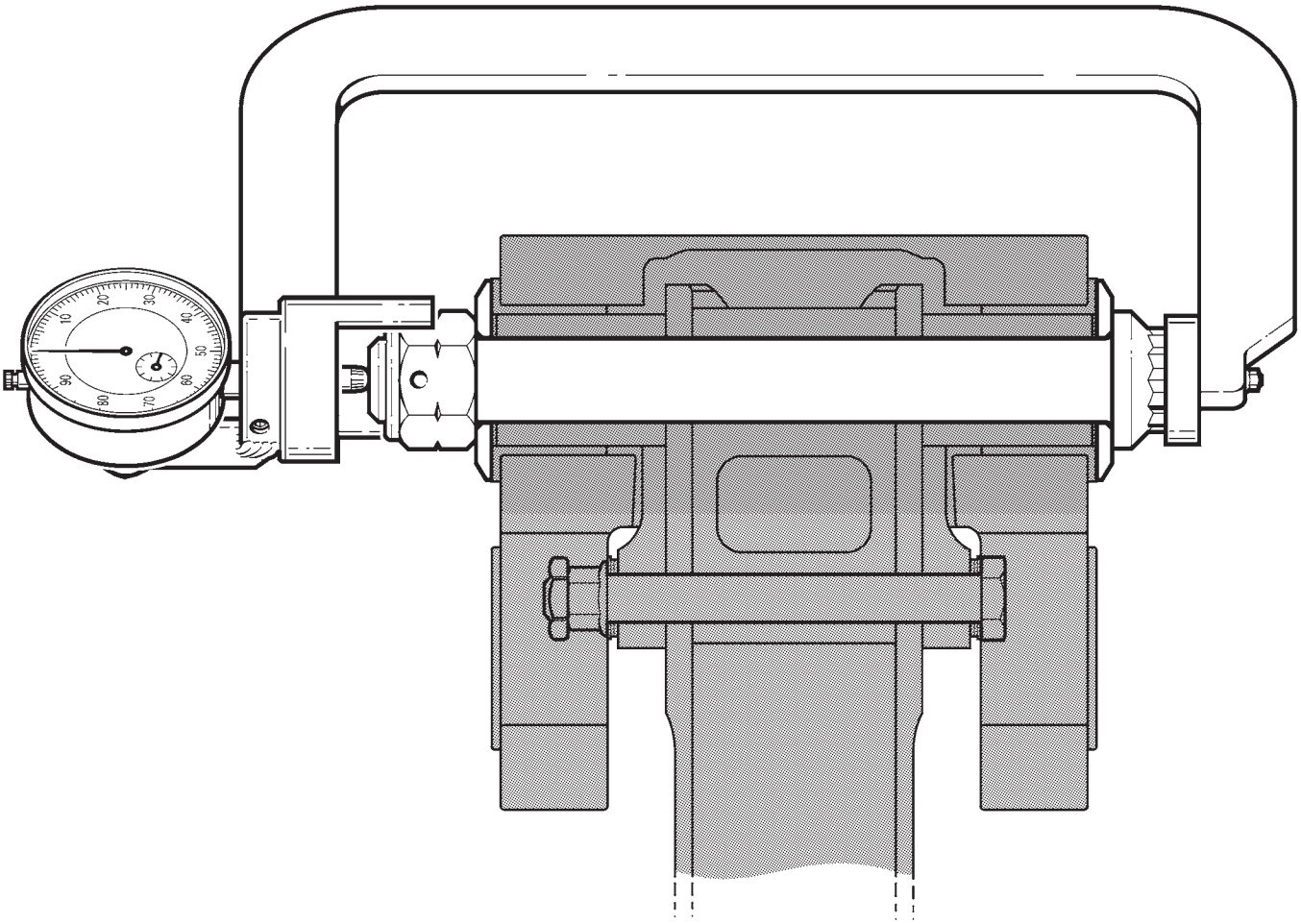

FIGURE 62-4 MEASURING BOLT STRETCH
(Shown on teeter hinge bolt)

62-10 Main Rotor Blades (continued)

B. Installation (continued)

CAUTION

To prevent damage, level and support installed blade until opposite blade is installed.

6. With installed blade level and supported near tip, install opposite blade per steps 1 thru 5.
7. Tighten nut on hinge bolt until journals and thrust washer are firmly seated. Then back nut off until both thrust washers can be freely rotated.
8. Install MT122-6 main rotor bolt stretch tool on hinge bolt per Figure 62-4. Zero dial indicator by rotating dial face. Lock dial and remove tool.
9. Using wrenches with at least 600 ft-lb torque capacity, tighten nut until drilled hole in nut and bolt align. Reinstall MT122-6 tool and measure bolt stretch; the stretch must be between 0.020 - 0.022 inch (0.021 - 0.022 inch for new, undrilled bolt). Remove tool. Install a new cotter pin with wet epoxy primer.

NOTE

If drilled holes in nut and bolt do not align, both nut and bolt must be replaced. Stretch new bolts per § 20-33; drill new nuts and bolts per § 62-33.

WARNING

The main rotor blade and hub attach bolts must be stretched from 0.020 - 0.022 inch (0.021 - 0.022 inch for new, undrilled bolt) to obtain proper clamping force. Under-stretching or over-stretching can cause catastrophic failure of the bolts.

10. Connect pitch link to pitch horn. Standard torque per § 20-32, install palnut, and torque stripe per Figure 5-1.
11. Repeat steps 1 thru 10 for remaining blade. If installed main rotor blade pitch bearing housing has recently been serviced (including new or overhauled blades), perform steps 12 thru 16.
12. Position cyclic and collective at approximately mid-travel positions to minimize wrinkles in boots.
13. Insert two (2) MT549-1 spacers between hub and boot with gaps at top and bottom. Spacers should fit in recess of boot. Hold spacers in place against boot and insert MT549-2 plate from top between hub and spacers. Push plate down until it contacts spindle.
14. Remove lower plug from pitch horn and allow oil to flow. Place a finger over hole as soon as oil flow decreases to a drip to prevent air from being sucked inside blade.
15. Remove finger from hole and quickly install drain plug. Special torque per § 20-33 and torque stripe per Figure 5-1.
16. Remove plate and spacers. Repeat on second blade.

62-11 Blade Boots

Refer to R66 Illustrated Parts Catalog (IPC) Figure 62-1.

A. Removal

1. Remove main rotor blades per § 62-10.

2. Place a suitable drain container below main rotor blade spindle assembly. Remove two B289-2 bolts and drain fluid.

3. Remove outer boot clamp and hold boot back to expose inner boot clamp. Remove inner clamp and peel boot from spindle. Boot inner portion may be sealed to spindle with B270-1 sealant.

4. As required, use a plastic scraper and vacuum cleaner to remove old B270-1 sealant from spindle area to be covered by boot inner lip. Avoid contaminating spindle bearings with old sealant.

WARNING

Use only plastic scrapers to remove old sealant; chemical removal is prohibited.

B. Installation

NOTE

C156-1 (Black) blade boots are standard; C156-2 (grey) boots are optional for use in sub-freezing temperatures.

1. Visually inspect and verify boot is undamaged. Carefully stretch new boot over spindle.

2. Solvent-clean surfaces clamped by boot inner lip. Properly position boot inner lip; install C165-1 (inner) clamp assembly and tighten clamp to 2.850 ± 0.005 inch outside diameter. Rotate spindle and verify adequate clearance between clamp assembly and pitch horn.

NOTE

When installing inner clamp, ensure that shoulder of boot inner lip is not wedged beneath clamp or clamp may loosen in service. Inspect boot interior and verify no cuts or punctures.

3. Stretch boot outer lip over pitch horn flange. Rotate spindle and align pitch horn arm bolt hole with spindle bolt hole. Install C165-2 (outer) clamp assembly and tighten clamp. Verify security.

4. Fill pitch bearing housing per § 12-51.

62-20 Main Rotor Hub

Refer to R66 Illustrated Parts Catalog (IPC) Figure 62-3.

A. Removal

1. Remove main rotor blades per Section 62-10.

2. Refer to Figure 62-2. Mark rotor hub using a grease pencil or soft marker as follows:

   a. Indicate nut side of teeter bolt.
   b. Indicate chord arm side of drive shaft.

3. Remove cotter pin, nut, thrust washers, C117 shims, C106 journals, and bolt. Rotate hub as required and remove hub. Do not drop C152 thrust washers or C106 journals.

4. Reinstall bolt, thrust washers, shims, journals, and nut in rotor hub exactly as removed.

CAUTION

Main rotor chordwise balance is adjusted using C106 journals and C117 shims. If assembly stackup is altered, an out-of-balance condition can occur.

B. Installation

1. Clean and dry teeter hinge hardware using approved solvent per Section 20-70. Inspect journals and thrust washers for chipping of chrome plating, corrosion, and/or wear grooves extending through chrome plating (0.0006 inch maximum wear). Replace journal or thrust washer if any of these conditions exist.

2. Line up mark on hub with chord arm on rotor shaft.

3. Refer to Figure 62-2. Reinstall teeter hinge bolt, thrust washers, shims, and journals exactly as removed. If previously installed information is unavailable, perform teeter hinge journal and shim calculation per Section 62-31. Ensure journals are clear of droop stops and fully contact drive shaft.

4. Coat nut face and bolt threads with A257-9 anti-seize compound, install and tighten nut, then loosen nut until both thrust washers can be freely rotated.

WARNING

Do not allow anti-seize compound to contaminate drive shaft, journals, shims, or thrust washer inner faces. Contamination prevents proper joint clamp-up and may cause failure.

5. Position MT122-6 main rotor bolt stretch tool on teeter bolt per Figure 62-4. Zero and lock dial indicator. Remove tool.

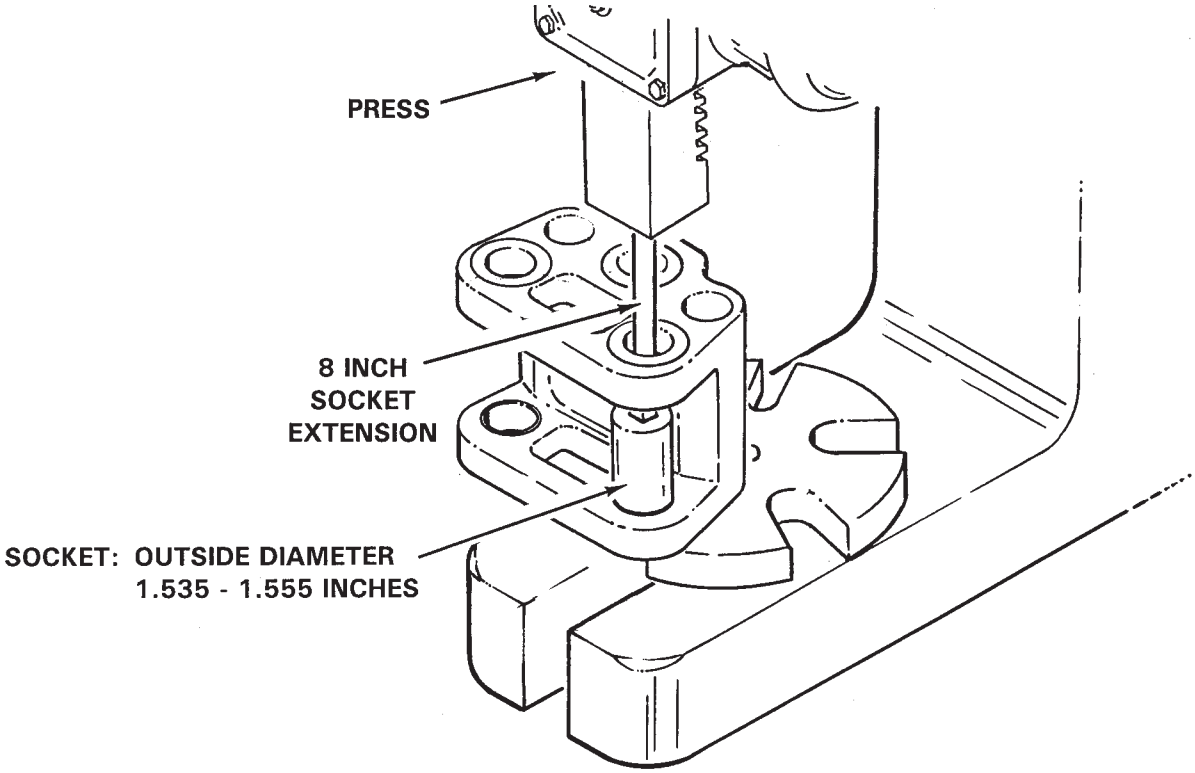

FIGURE 62-5 MAIN ROTOR HUB BEARING REMOVAL

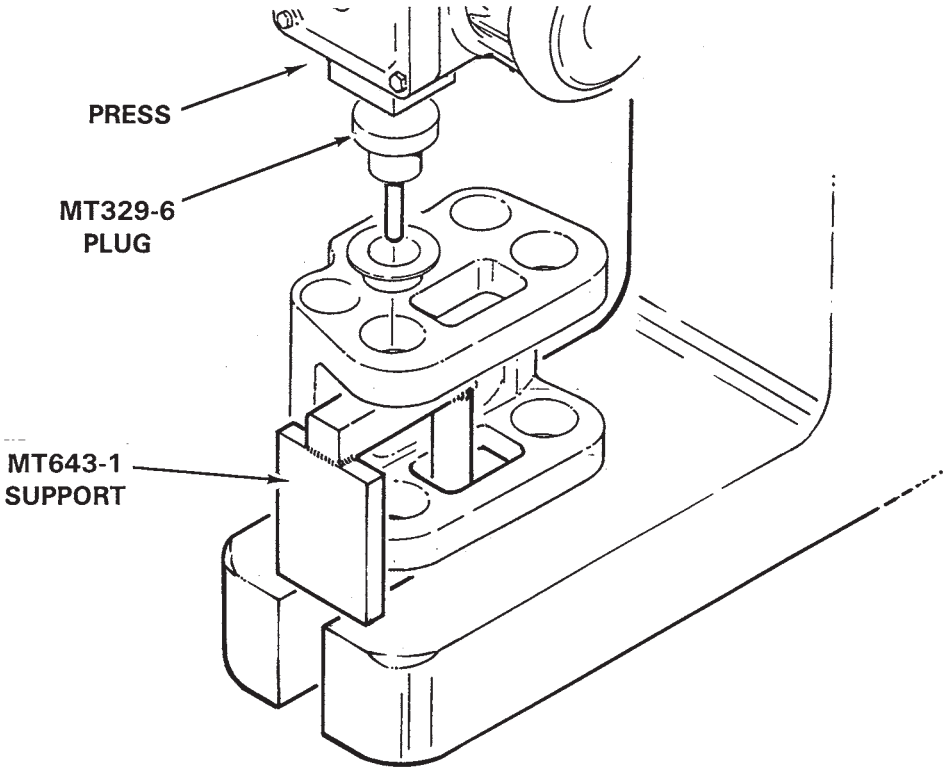

FIGURE 62-6 MAIN ROTOR HUB BEARING INSTALLATION

62-20 Main Rotor Hub (continued)

B. Installation (continued)

6. Using wrenches with at least 600 ft-lb torque capacity, tighten nut until drilled hole in nut and bolt align. Reinstall MT122-6 tool and measure bolt stretch; the stretch must be between 0.020-0.022 inch (0.021-0.022 inch for new, undrilled bolt). Remove tool.

> NOTE
>
> If drilled holes in nut and bolt do not align, both nut and bolt must be replaced. Stretch new bolts per Section 20-33; drill new nuts and bolts per Section 62-33.

> **WARNING**
>
> **The main rotor blade and hub attach bolts must be stretched from 0.020 - 0.022 inch (0.021 - 0.022 inch for new, undrilled bolt) to obtain proper clamping force. Under-stretching or over-stretching can cause catastrophic failure of the bolts.**

7. Verify correct teeter hinge friction per Section 62-32; adjust as required and perform step 6.

8. If required, drill cotter pin hole per Section 62-33. Coat a new cotter pin with epoxy primer and install wet.

62-21 Bearing Replacement

Refer to R66 Illustrated Parts Catalog (IPC) Figure 62-3.

1. Remove main rotor hub per Section 62-20.

2. If main rotor hub is to be reinstalled with same blades, measure and record shim thicknesses and locations in hub.

3. Refer to Figures 62-2 and 62-3. Measure and record hub width across widest point of teeter and coning hinge bearing faces (total of three measurements).

> **CAUTION**
>
> To prevent hub damage ensure all tool and bearing surfaces are smooth.

4. Refer to Figure 62-5. Press old bearing(s) out of hub using a socket having an outer diameter of 1.535-1.555 inches and an 8 inch extension.

> **CAUTION**
>
> Ensure hub is flat on press table and socket is centered on bearing to prevent hub damage.

5. Inspect hub bearing bore. Verify no scoring or scratches. Polish out fretting and corrosion to a maximum depth of 0.001 inch (0.005 inch on radius at edge of bore) using 320-grit or finer wet-or-dry sandpaper and 0.25 inch minimum blend radius. Replace hub if fretting or corrosion cannot be polished out within limits.

62-21 Bearing Replacement (continued)

6. Ensure new bearing mating surfaces are clean and smooth. Coat hub bearing bore and hub bearing mating surfaces with epoxy primer (see Section 20-70). Do not allow primer to contaminate Teflon portion of bearing.

7. Refer to Figure 62-6. If seam of bearing Teflon liner is visible, orient bearing so seam is toward top of hub (as installed on helicopter). While primer is still wet, press in new bearing using MT329-6 plug and MT643-1 support (support is not used when pressing in teeter hinge bearings) until bearing flange contacts hub.

CAUTION

Use MT643-1 support when installing coning hinge bearings. Never install coning hinge bearings into unsupported hub.

8. Seal between bearing flange and hub with epoxy primer. Similarly seal between inboard edge of bearing and hub. Do not allow primer to contaminate Teflon portion of bearing.

9. Measure hub width across teeter and coning hinge bearing faces. Compare widths with measurements from step 3. Any hub width increase requires calculating new stack-up for affected hinge per Section 62-31.

10. If reinstalling hub on same helicopter, install hardware as removed in step 2, subject to preceding step. Reinstall hub per Section 62-20.

62-30 Main Rotor Assembly

62-31 Journal and Shim Calculations

Refer to Figures 62-2 and 62-3.

A. Teeter Hinge Calculation

1. Measure main rotor hub width across the teeter hinge bearing faces: _____ inches
2. Subtract measured width of C251 driveshaft at teeter hinge bolt hole: – _____ inches

   Calculated empty space: = _____ inches
3. Use one C106-5 journal and a selection of C117 shims to create a combined length of approximately 1.835 inches. Use as many different size shims as possible. Place thrust washer, shims, and journal under teeter bolt head; shims must be placed between thrust washer and journal.

   Subtract combined measured thickness of selected journal and shims: – _____ inches

   Difference: = _____ inches
4. Subtract measured length of C106-5 journal to be used on nut-side: – _____ inches

   Difference: = _____ inches

> **CAUTION**
>
> Initial teeter hinge hardware stack-up must be adjusted to 0.005/0.008 inch greater than calculated empty space. A smaller initial stack-up could damage thrust washers and hub bearings during installation.

5. To accommodate dimensional change due to clamping force, add: + 0.005/0.008 inch

   Result: = _____ inch of C117 shims
6. Preceding Result is initial calculated C117 shim stack between nut-side journal and thrust washer. Use as many different size shims as possible to facilitate head shifting during balancing. Deviate from initial shim stack as required to meet teeter hinge friction requirements (8-12 pounds is ideal).

62-31 Journal and Shim Calculations (continued)

B. Coning Hinge Calculation

1. Measure and record main rotor hub width across the coning hinge bearing faces: _____ inches

2. Subtract blade's spindle width measured across faces at coning hinge bolt bore: – _____ inches

Calculated empty space: = _____ inches

> **CAUTION**
>
> Initial coning hinge hardware stack-up must be adjusted to 0.007/0.011 inch greater than calculated empty space. A smaller initial stack-up could damage thrust washers and hub bearings during installation.

3. To accommodate dimensional change due to clamping force, add: + 0.007/0.011 inch

Sum: = _____ inch

4. Subtract combined measured length of both C106-7 journals to be installed: – _____ inches

Result: = _____ inch of C117 shims

5. Preceding Result is initial calculated C117 shim stack required between trailing-edge journal and thrust washer. Deviate from initial trailing edge shim stack-up as necessary to meet coning hinge axial play per Figure 62-8 and maintain friction requirements as follows: It must be possible to manually cone each blade without teetering the hub when blades are held up off the droop stops and lifted at tip. Increasing shim stack-up or journal length decreases hinge friction.

C106 Journal Lengths

Part No.	Length	Location
C106-5	1.775	Teeter hinge (two per hinge)
C106-7	1.284	Coning hinge (two per hinge)

C117 Shim Sizes

Part No.	Thickness	Location (Between thrust washer and journal)
C117-8	0.012	Teeter hinge; Coning hinge trailing-edge side
C117-9	0.015	Teeter hinge; Coning hinge trailing-edge side
C117-10	0.020	Teeter hinge; Coning hinge trailing-edge side
C117-11	0.025	Teeter hinge; Coning hinge trailing-edge side

TABLE 62-1 HINGE FRICTION JOURNALS AND SHIMS
(Journal length and shim thickness values given in inches)

Intentionally Blank

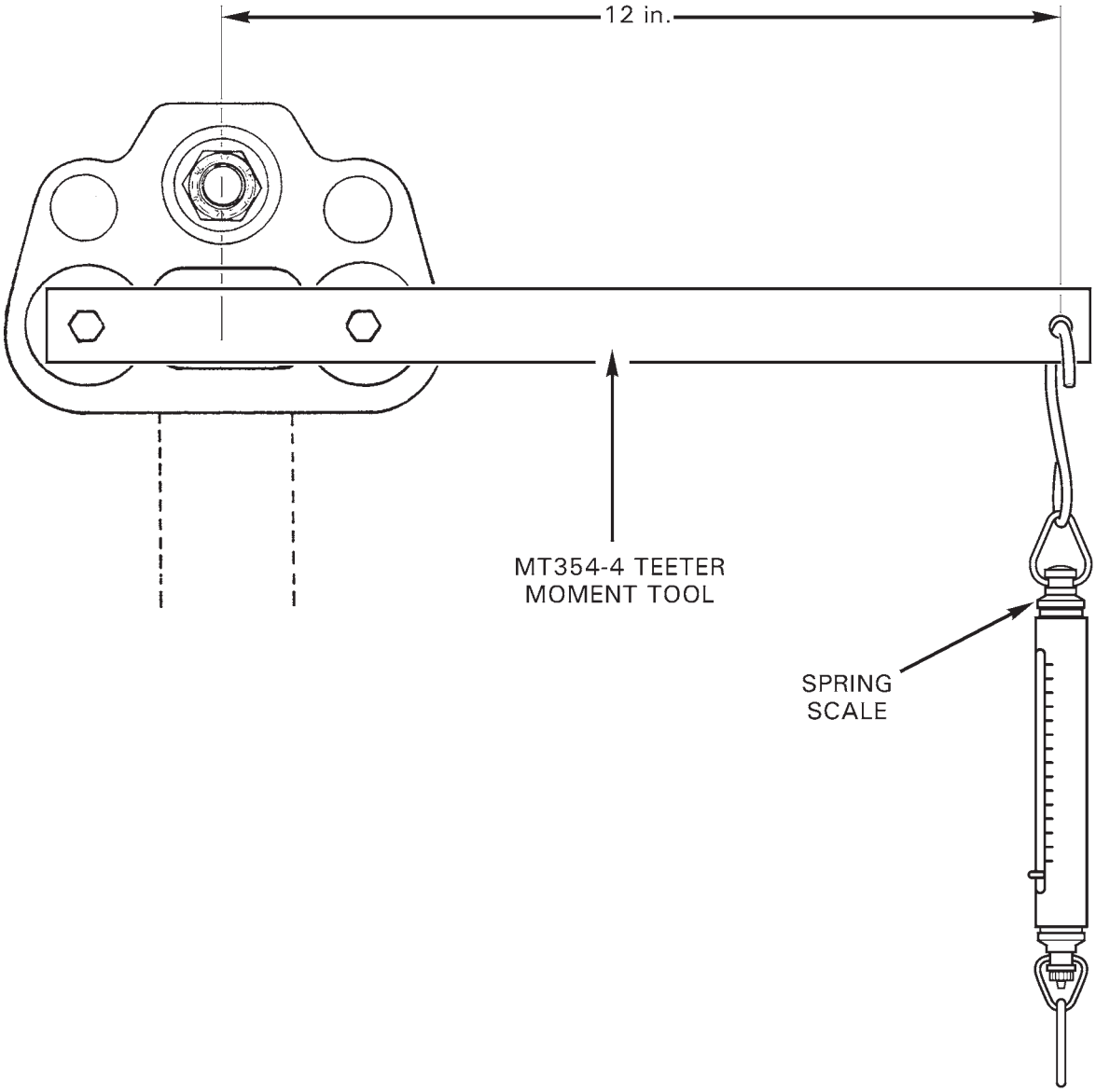

FIGURE 62-7 MEASURING TEETER HINGE FRICTION

62-32 Adjusting Hinge Friction

A. Teeter Hinge Adjustment

> NOTE
>
> Teeter hinge friction must be checked and adjusted with main rotor blades removed from main rotor hub. If required, remove main rotor blades per Section 62-10.

Teeter hinge friction is adjusted by changing C117 shim stack in small increments.

> NOTE
>
> If shim stack is changed per following instructions, a new bolt and nut must be installed per Section 62-10 Part B, steps 3 thru 5.

1. Refer to Figure 62-7. Install MT354 teeter moment tool into main rotor hub coning hinge bearings. Using a spring scale, measure force required to teeter main rotor hub; use sliding force reading, not breakaway reading. Force required to teeter main rotor hub must be:

   Minimum: No axial play
   Maximum: 19 pounds

2. Refer to Figure 62-2. Remove cotter pin and teeter hinge nut. Remove thrust washer and C117 shims under nut.

3. Refer to Table 62-1. Measure thickness of C117 shims under teeter hinge nut. Change shims as necessary to adjust friction. Reducing shim stack-up by 0.003 - 0.005 inch will increase teeter friction. Increasing shim stack-up will reduce teeter friction.

4. Reassemble teeter shims, thrust washer, and nut. Repeat step 1. Torque teeter hinge bolt per Section 62-20 Part B steps 4 thru 6 and check teeter friction often while stretching bolt. Do not exceed maximum teeter hinge friction. If required, increase shim stack-up per preceding step so proper bolt stretch is reached prior to maximum friction.

5. Cotter pin holes in nut and bolt will not align. Remove teeter hinge bolt by pressing it out with an old bolt. Install a new bolt and nut per Section 62-10 Part B, steps 4 thru 6. Drill new bolt and nut per Section 62-33; coat new cotter pin with epoxy primer and install wet.

6. If required, install main rotor blades per Section 62-10.

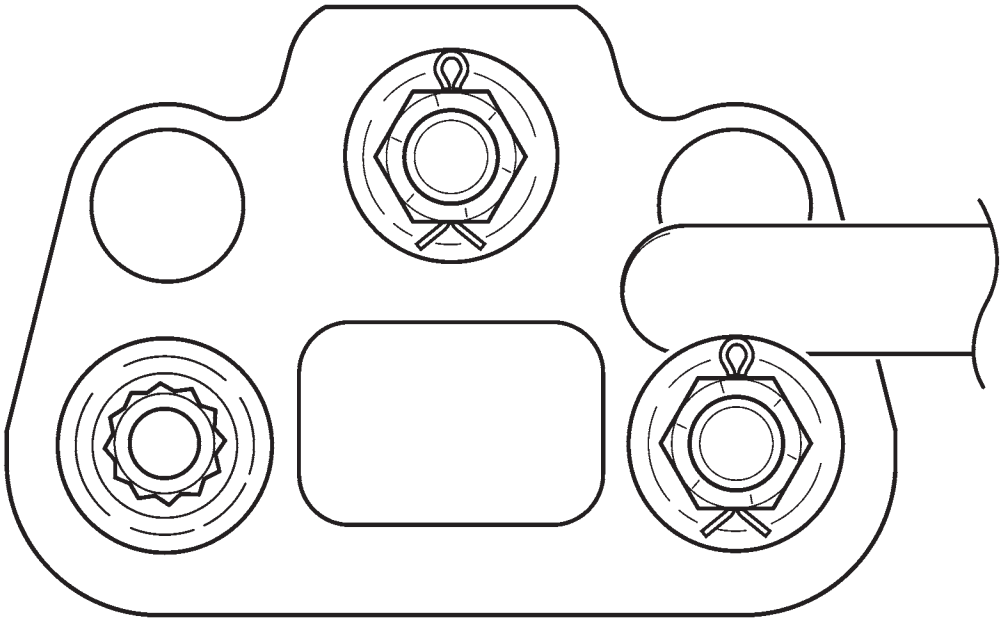

FRONT VIEW OF MAIN ROTOR HUB

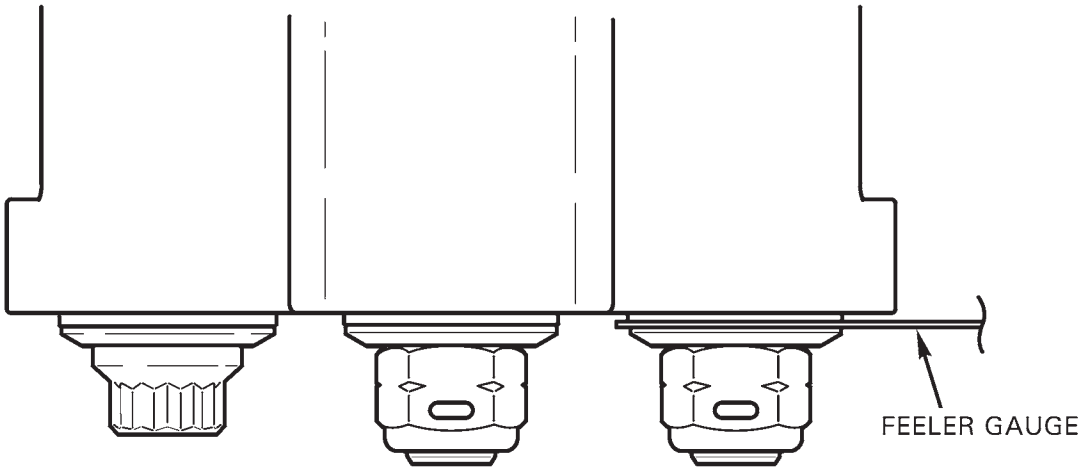

TOP VIEW OF
MAIN ROTOR HUB

MAXIMUM GAP, A TOTAL OF BOTH SIDES:
0.005 in. - USED
0.003 in. - NEW

FIGURE 62-8 MEASURING THRUST WASHER AND HUB BEARING GAP

62-32 Adjusting Hinge Friction (continued)

B. Coning Hinge Adjustment

Coning hinge friction is adjustable through use of various thickness C117 shims. Shims are installed between the thrust washer and the trailing-edge journal.

1. Check blade hinge friction by lifting blades until spindle tusks clear droop stops. Hold one blade level and cone opposite blade. Rotor hub should not teeter as blade is coned. Repeat check on opposite blade.

2. Refer to Figure 62-8. Using a feeler gage, measure gap between thrust washer and rotor hub bearing. Gap must be measured on both leading edge & trailing edge sides of coning hinge and the total must not exceed 0.005 inch (0.003 inch if new hub bearings are installed).

3. Refer to Figure 62-3. Remove cotter pin, nut, and thrust washer from coning hinge bolt.

4. Refer to Table 62-1. Remove shim(s) to be changed. Measure shim thickness and select next size thicker or thinner as required. A thicker shim will decrease blade's coning hinge friction. A thinner shim will increase blade's coning hinge friction and decrease any gap between blade's thrust washers and hub bearings.

> NOTE
>
> When a shim is replaced with a shim of a different size, it will be necessary to install a new nut and bolt. Drilled holes in original bolts will not align at required bolt stretch.

5. Replace coning hinge bolt with a new bolt.

6. Install shims, and new bolt and nut, per Section 62-10 Part B, steps 4 thru 6.

7. Repeat steps 1 and 2. Drill new bolt and nut per Section 62-33; coat new cotter pin with epoxy primer and install wet. Repeat on opposite blade as required.

62-33 Drilling Nuts and Bolts

New bolts and nuts must be installed and bolts stretched to Section 20-32 limits prior to drilling. Nuts have three blind holes pre-drilled into every other nut flat to be used as drilling guides.

Using a six inch long 0.156-inch diameter Cobalt twist-drill, drill a hole through nut and bolt using an accessible pre-drilled hole in nut. If a shorter length drill is used, protect hub from damage due to chuck contact by wrapping chuck and/or covering hub edge with several layers of tape. Prevent chips from contaminating other mechanisms.

> NOTE
>
> If none of the predrilled holes in nut are accessible for use as a guide after stretching bolt, loosen nut and reposition bolt and nut. Restretch bolt per Section 20-32.

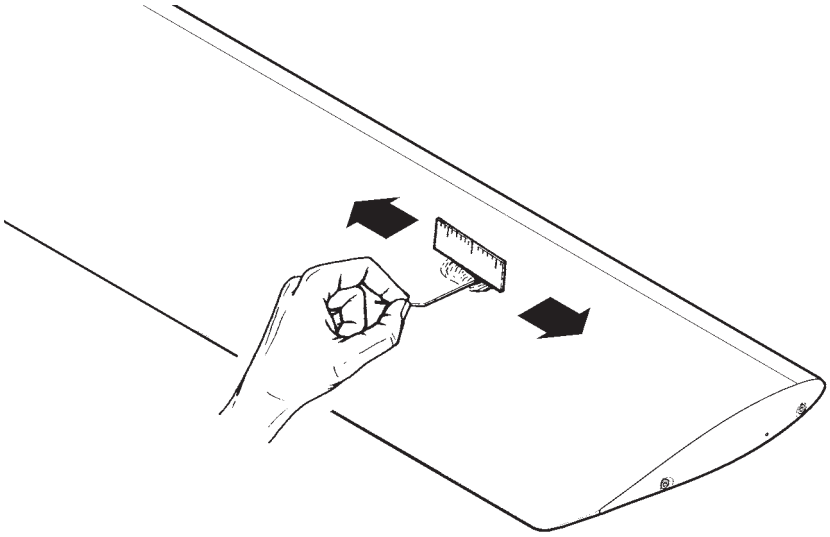

FIGURE 62-9 MEASURING BLADE DAMAGE WITH STRAIGHT EDGE

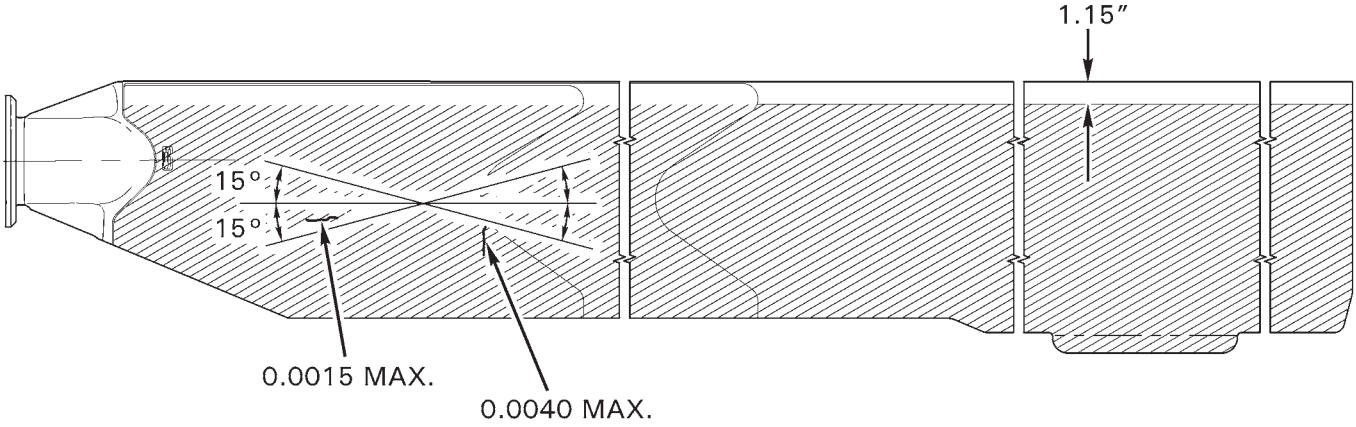

FIGURE 62-10 SCRATCHES AND CORROSION ON SKINS AND DOUBLERS - DAMAGE LIMITS

62-40 Inspection of Main Rotor Blades

NOTE

Main rotor blades are 14 CFR § 27.602 critical parts. Notify RHC Technical Support when voids exceeding the limits specified in the instructions below are found, providing blade serial number, helicopter serial number, time in service for the rotor blade, and location and size of the voids that exceed the limits.

NOTE

The inspection criteria in this section applies to blade damage that occurs after blade manufacturing (including shipping and handling and time in service). Damage after blade manufacturing usually exhibits paint scuffing, scratches, or freshly-exposed metal in the form of scratches in the finish. If a blade manufacturing irregularity is suspected, contact RHC Technical Support.

CAUTION

A blade may be repaired more than one time. However, in no case can more than the maximum material be removed or the maximum dent depth be exceeded in any one location.

A. Measuring Damage

1. Refer to Figure 62-9. Measure blade damage using a straight edge and a thickness gage. Keep straight edge parallel with the leading and trailing edges.

2. If blades are installed on the helicopter, measure damage using the shortest straight edge possible to span damaged area. Using a straight edge of excessive length will cause a false reading due to natural droop of the blade.

B. Measuring Material Removed After Repair

1. Use calipers or micrometers and compare measurements before and after repair to estimate amount of material removed.

2. Use a straight edge and thickness gage to measure repaired areas less than 2 inches across in the blade skins and spar.

62-41 Scratches and Corrosion

A. Skins and Doublers

1. Refer to Figure 62-10. Verify damage does not exceed the following limits:

   a. 0.0040 inch maximum depth for scratches more than 15° spanwise on skins and doublers.
   b. 0.0060 inch maximum depth for scratches less than 15° spanwise on skins and doublers.

2. Refer to § 62-50 for repair procedures for damage within limits. Blend out scratches or corrosion on blade skins or doublers with a 0.10 inch blend radius.

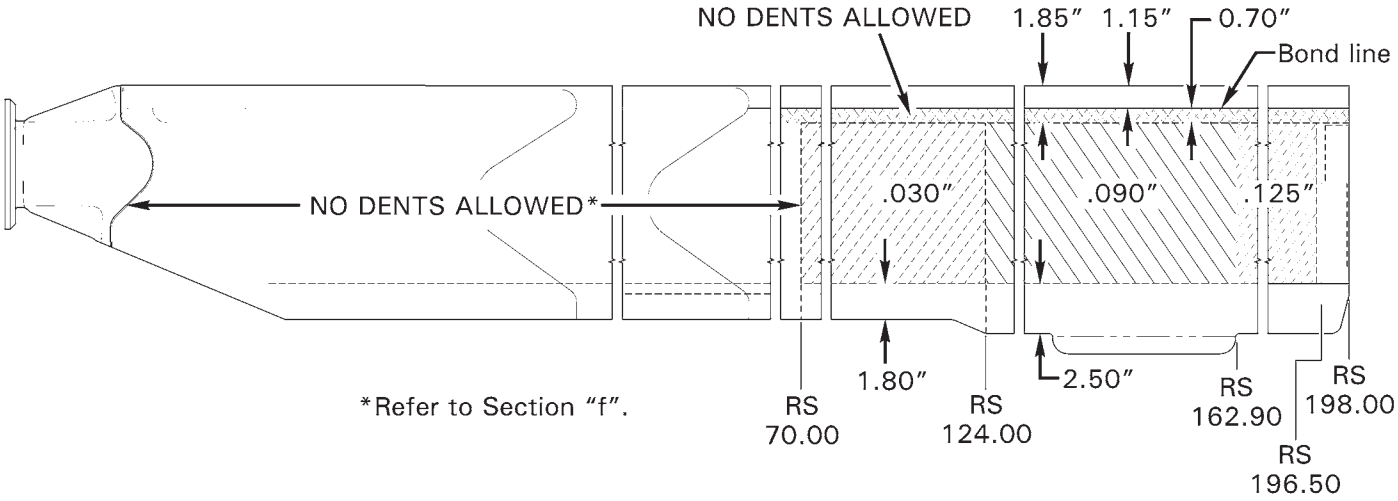

FIGURE 62-11 DENTS ON SKINS AND DOUBLERS - DAMAGE LIMITS

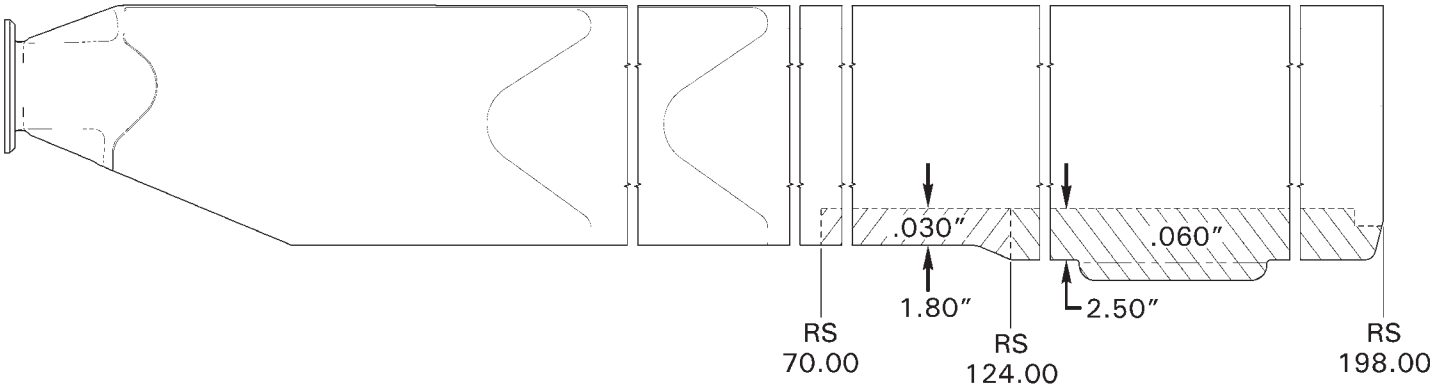

FIGURE 62-12 DENTS ON TRAILING EDGE BOND JOINTS - DAMAGE LIMITS

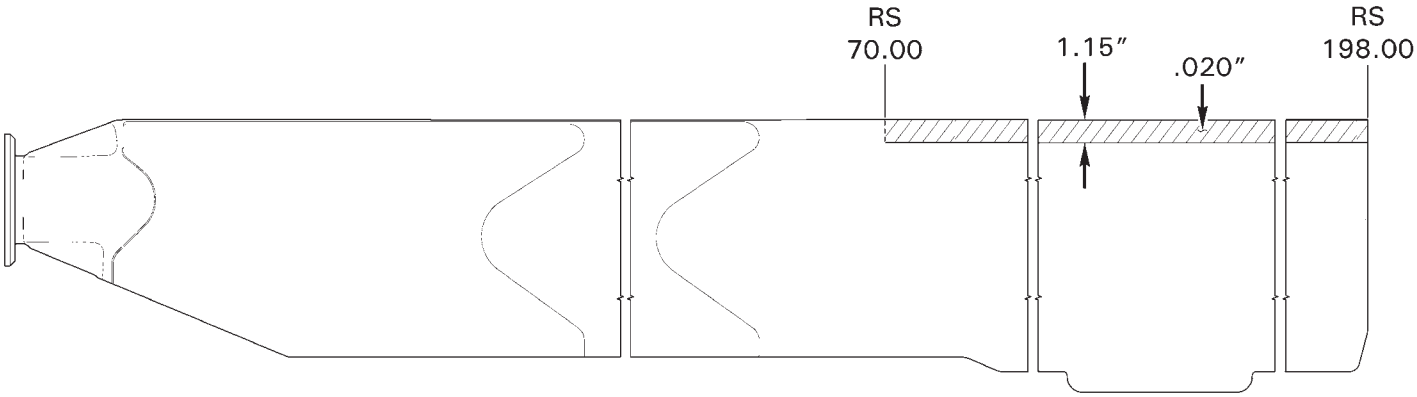

FIGURE 62-13 SPAR DAMAGE

62-42 Dents

CAUTION

Tap-test dented areas in honeycomb. If any voids are found associated with dents, contact RHC Customer Service.

Tap-test voids, debonds, and dents in blades using an AN970-4 washer or 1965 or later U.S. quarter dollar coin in good condition.

CAUTION

When dented areas are found, inspect opposite side of the blade for a bulge. Replace blade with a bulge greater than 0.010 inch opposite a dent.

CAUTION

Do not repair any dent that has a sharp cut or break in the skin. If necessary, locally penetrant inspect, keeping penetrant materials away from bond joints.

A. Skins and Doublers

1. Refer to Figure 62-11. Smooth, round bottom dents with 0.060 inch minimum radius that occur in honeycomb and unsupported areas of the blade as listed below may be repaired when damage does not exceed the following limits:

   a. 0.125 inch maximum depth dent between RS 162.90 and RS 196.50
   b. 0.090 inch maximum depth dent between RS 124.00 and RS 162.90.
   c. 0.030 inch maximum depth dent between RS 70.00 and RS 124.00.
   d. Maximum area of any dent or dents is 12 square inches and maximum length is 2.0 inches between RS 70.00 and RS 162.90.
   e. Maximum area of any dent or dents is 24 square inches and maximum length is 4.0 inches between RS 162.90 and RS 196.50.
   f. Replace blade with any dent in 0.7 inch area immediately aft of skin-to-spar bond line.
   g. For dents in skins and/or doublers inboard of RS 70.00, contact RHC for repair procedures.

2. Refer to Part C for leading edge cap damage. Refer to Section 62-50 for repair procedures for damage within limits.

B. Trailing Edge Bond Joints

1. Refer to Figure 62-12. Verify damage does not result in an edge void and does not exceed the following limits:

   a. 0.030 inch maximum damage between RS 70.00 and RS 124.00.
   b. 0.060 inch maximum damage between RS 124.00 and 198.00.
   c. Refer to Part A, step 1(d).

2. Refer to Section 62-50 for repair procedures for damage within limits. Blend out dents in trailing edge bond joints with a 0.10 inch blend radius.

C. Leading Edge Cap

1. Verify damage does not result in a crack or tear and dent depth does not exceed 0.020 inch.

2. Dents do not require blending or filling. Dents may be blended with a 0.10 blend radius.

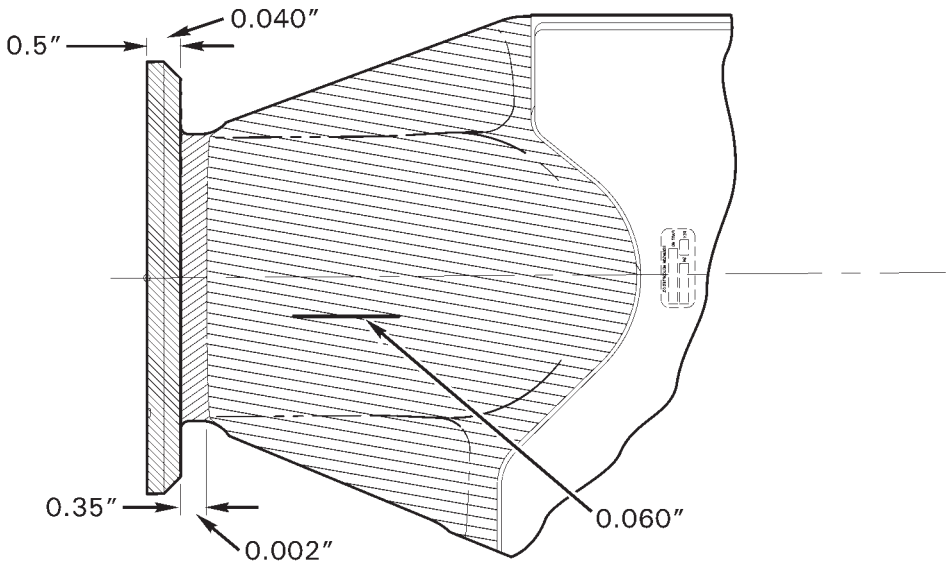

FIGURE 62-14 ROOT FITTING DAMAGE

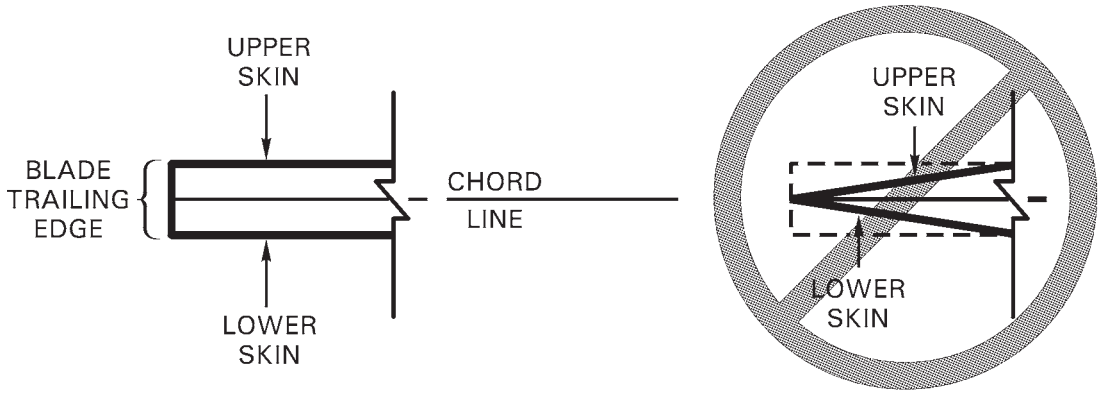

FIGURE 62-15 REPAIRS TO BLADE AND TRIM TAB TRAILING EDGES

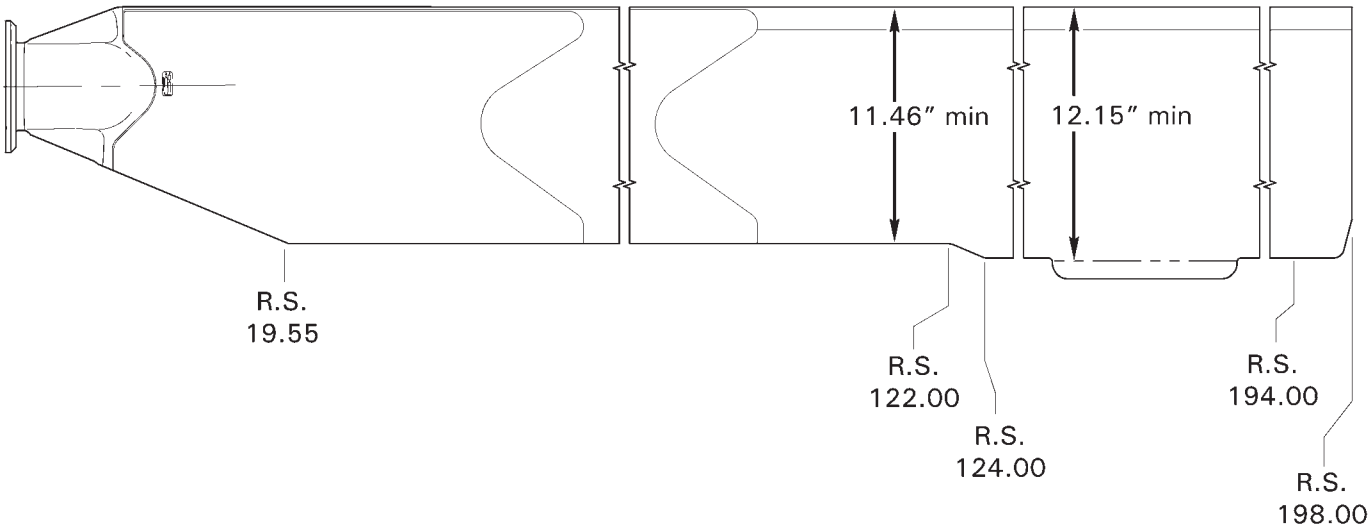

FIGURE 62-16 MINIMUM CHORD AFTER BLADE AND TRIM TAB TRAILING EDGE REPAIRS

62-43 Spar Damage

1. Refer to Figure 62-13. Spar damage limits exclude leading edge cap. Verify damage does not exceed the following limits:

   a. 0.020 inch maximum depth between RS 70.00 and RS 198.00.
   b. Replace blade if erosion has reduced thickness at spar leading edge to 0.040 inch.
   c. Replace blade if erosion has cause ripples in or deformation to spar leading edge.

2. Refer to Section 62-50 for repair procedures for damage within limits. Blend out spar damage with a minimum 1.0 inch blend radius.

62-44 Root Fitting Damage

1. Refer to Figure 62-14. Verify damage does not exceed the following limits:

   a. 0.040 inch maximum depth on outside diameter of flange.
   b. 0.002 inch maximum depth on area 0.35 inch outboard of flange.
   c. 0.060 inch maximum depth on other root fitting exposed areas.

2. Refer to Section 62-50 for repair procedures for damage within limits. Blend out root fitting damage with a minimum 1.0 inch blend radius.

62-45 Nicks and Notches

A. Blade Trailing Edge (see also Blade Tip)

1. Refer to Figure 62-15 and Section 62-50 for repair procedures for damage within limits. Blend out nicks and notches in blade trailing edge for 1.0 inch minimum each side of nick or notch (with a minimum 12 inch blend radius).

2. Refer to Figure 62-16. After repair, verify minimum chord is within the following limits:

   a. 12.15 inch minimum chord between RS 124.00 and RS 194.00.
   b. 11.46 inch minimum chord between RS 19.55 and RS 122.00.

3. See Section 62-42 for additional inspection criteria.

B. Blade Tip

1. Refer to Figure 62-17. Using a fine-toothed hand file, file in spanwise or chordwise direction, within limits indicated. Remove file marks using 220 grit or finer aluminum oxide abrasive paper.

2. File trailing edge to maintain square edge at skins, perpendicular to chord line, per Figure 62-15. Seal exposed trailing edge bond joint.

3. Track and Balance Main Rotor per Chapter 18.

C. Trim Tab Trailing Edge

1. Verify damage does not exceed 0.050 inch chordwise or 0.30 inch spanwise.

2. Refer to Figure 62-15 and Section 62-50 for repair procedures for damage within limits. Blend out nicks & notches in trim tab trailing edges, 1.0 inch minimum each side of nick or notch (with a minimum 12 inch blend radius) keeping edge parallel with blade trailing edge.

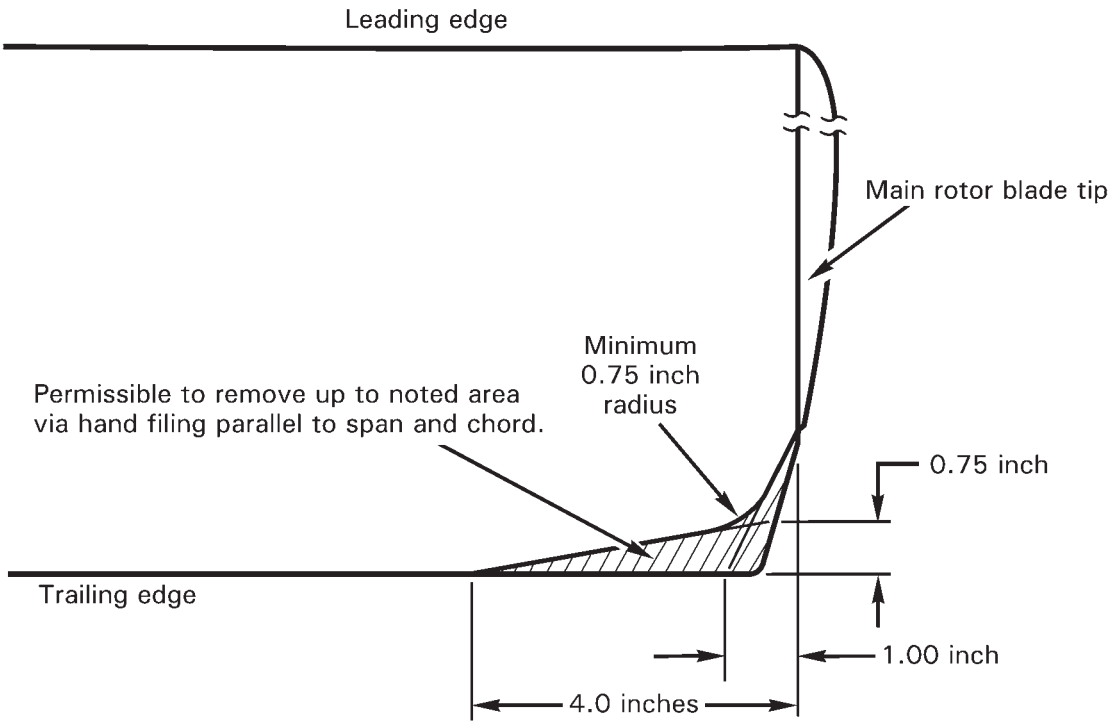

FIGURE 62-17 BLADE TIP REPAIR LIMITS

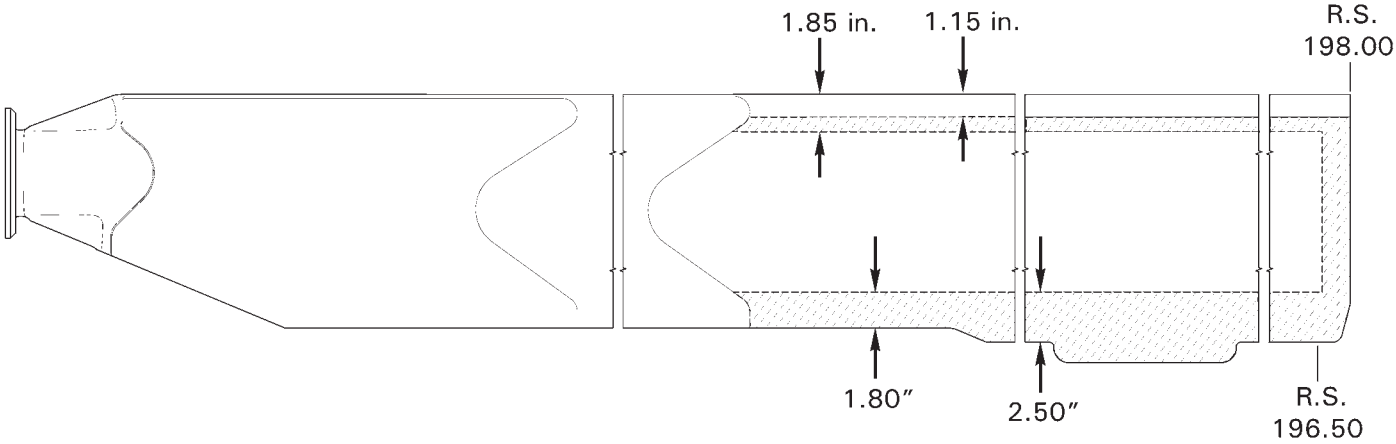

FIGURE 62-18 TIP CAP, SPAR, AND TRAILING EDGES - VOID AND DEBOND LIMITS

62-46 Voids and Debonds

> NOTE
>
> Tap-test dented areas in honeycomb. If any voids are found associated with dents, contact RHC Customer Service.
>
> Tap-test voids, debonds, and dents in blades using an AN970-4 washer or 1965 or later U.S. quarter dollar coin in good condition.

A. Tip Caps, Spars, and Trailing Edges

1. Refer to Figures 62-18. Verify no continuous void larger than 0.10 square inch. 90% of the area must be securely bonded. Voids separated by 0.25 inch or less spanwise are considered continuous.

B. Doublers

1. Refer to Figures 62-19. Voids or debonds in doublers are not field-repairable.

   a. Critical Areas: Area less than 0.50 inch spanwise and less than 0.30 inch chordwise from edge of doubler. Verify no individual void larger than 0.10 square inch except at the doubler finger tips. The finger tips may be debonded from the outboard tip to 1.0 inch inboard. Voids that are separated by less than 0.25 inch shall be considered continuous.

   b. Non-Critical Areas: Area more than .50 inch spanwise or more than .30 inch chordwise from doubler edges. Verify void does not exceed 2.0 inches chordwise by 7.0 inches spanwise maximum continuous void. Voids that are separated by less than 0.25 inch shall be considered continuous. Total area of any void may not exceed 6.0 square inches.

2. If voids or debonds are beyond limit, contact RHC Technical Support.

C. Honeycomb

1. Refer to Figures 62-20. Verify damage does not exceed the following limits:

   a. 1.50 inch chordwise or 20.00 inch spanwise maximum continuous void between RS 121.00 & inboard. Total area of any void may not exceed 15.0 square inches.

   b. 2.50 inch chordwise or 20.00 inch spanwise maximum continuous void between RS 121.00 & RS 196.50. Total area of any void may not exceed 15.0 square inches.

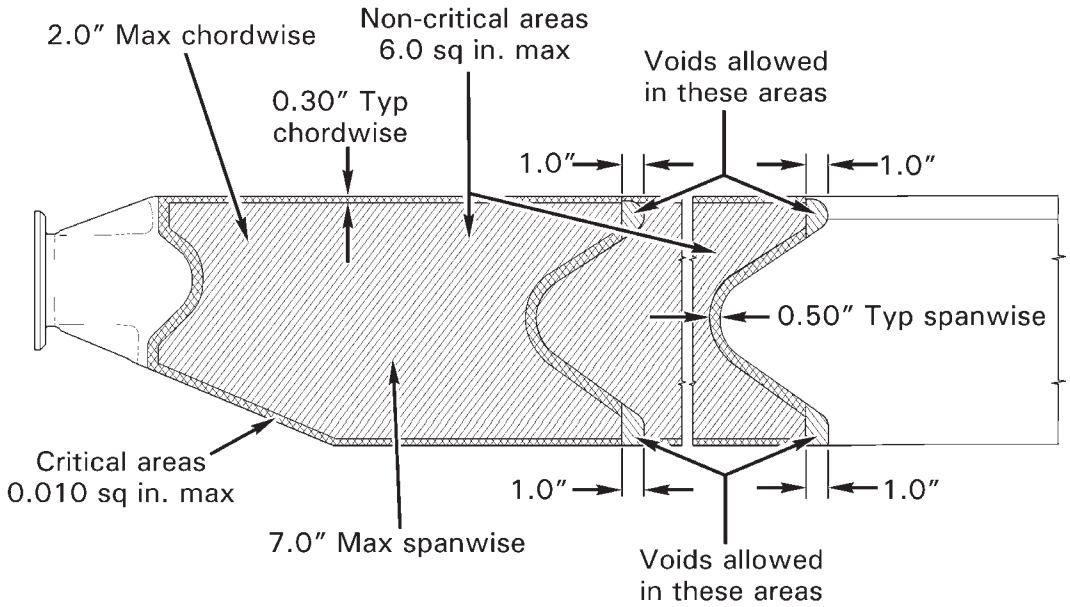

FIGURE 62-19 DOUBLERS - VOID AND DEBOND LIMITS

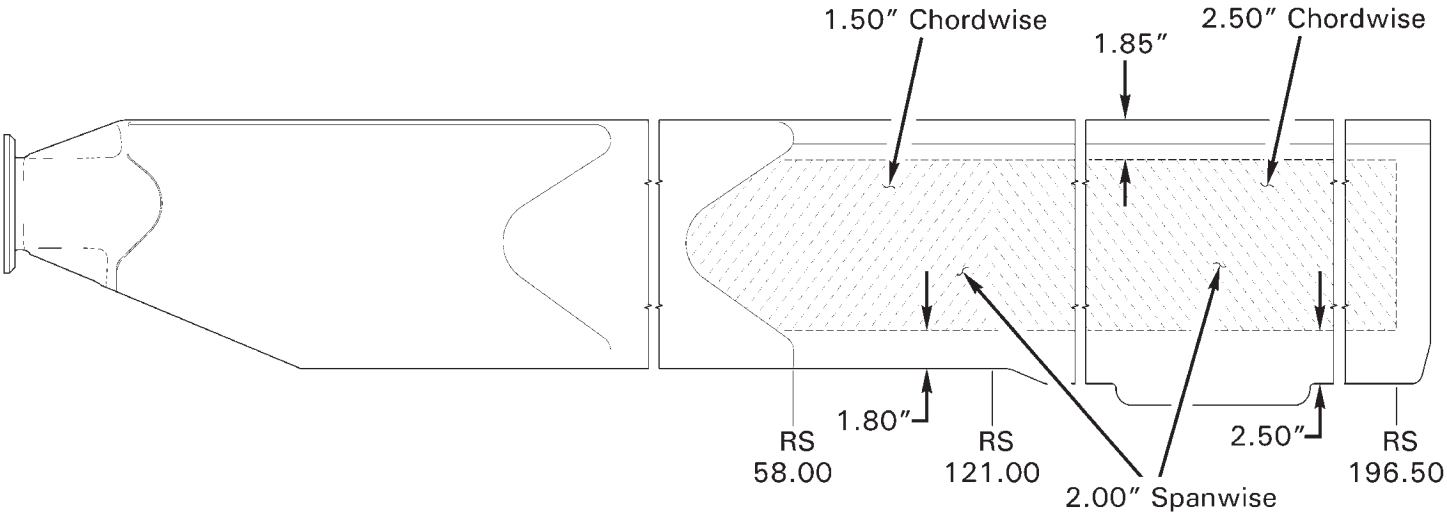

FIGURE 62-20 HONEYCOMB - VOID AND DEBOND LIMITS

62-50 Repair of Main Rotor Blades

CAUTION

DO NOT USE power tools or chemical paint strippers to remove blade materials.

1. Measure damage per Section 62-40.

2. Polish out blade damage using 220 grit or finer wet-or-dry aluminum-oxide or silicon-carbide abrasive paper, and finish with 320 grit or finer wet-or-dry abrasive paper.

3. A fine-toothed file may be used along the spar and trailing edge, provided the area is finished with 320 grit or finer wet-or-dry abrasive paper. Hand-sand or file in spanwise direction.

4. Remove only the material necessary to reach the bottom of the damage, and to blend the reworked area to the radius or dimension required. Visually inspect and verify all damage is removed.

5. Measure reworked area and verify material removed and/or new chord dimension is permissible per Section 62-40.

6. Seal and fill per Section 62-51, as required. Paint per Section 62-52, as required.

7. Track and balance main rotor per Chapter 18, as required.

62-51 Sealing, Filling, and Fairing

1. Clean area needing sealing, filling, and fairing with QSOL 220.

2. Apply Scotch-Weld structural adhesive #2216 B/A to bond joints with pin holes or other openings in accordance with adhesive manufacturer's instructions. Allow a minimum of 24 hours cure time.

3. Using 240 grit or finer wet-or-dry aluminum-oxide or silicon-carbide abrasive paper, hand-sand cured adhesive in spanwise direction to a smooth, aerodynamic finish, congruent with the blade airfoil. Do not remove metal.

4. Hand-sand surrounding painted surface until 25% primer remains. Keep bare metal to a minimum.

62-52 Painting

CAUTION

If force-drying paint, do not exceed 175°F surface temperature on blade; monitor blade temperature by temporarily installing P/N 110-2 Telatemp on blade skin.

1. Mask area to prevent overspray contamination.

2. Clean bare metal to be painted with a lint-free cloth dampened with enamel cleaner (see Approved Materials, Section 20-70).

3. Prime bare metal with at least two coats of epoxy primer. Scuff first coat of primer with 320 grit abrasive paper (or very fine Scotch-Brite), and wipe down with a lint-free cloth dampened with enamel cleaner prior to applying new coat.

NOTE

Best results are achieved if primer is allowed to air-dry for 12 hours prior to top coat application.

4. Refer to Figure 62-21. Apply dark gray, flat black, white, and/or yellow Dupont Imron polyurethane enamel (or equivalent; see Approved Materials, Section 20-70), as required, to primed area in accordance with paint manufacturer's recommendations.

NOTE

Allow Imron paint to cure at least 72 hours before flying in erosive conditions (such as drizzle, rain, or dust).

5. Remove masking materials.

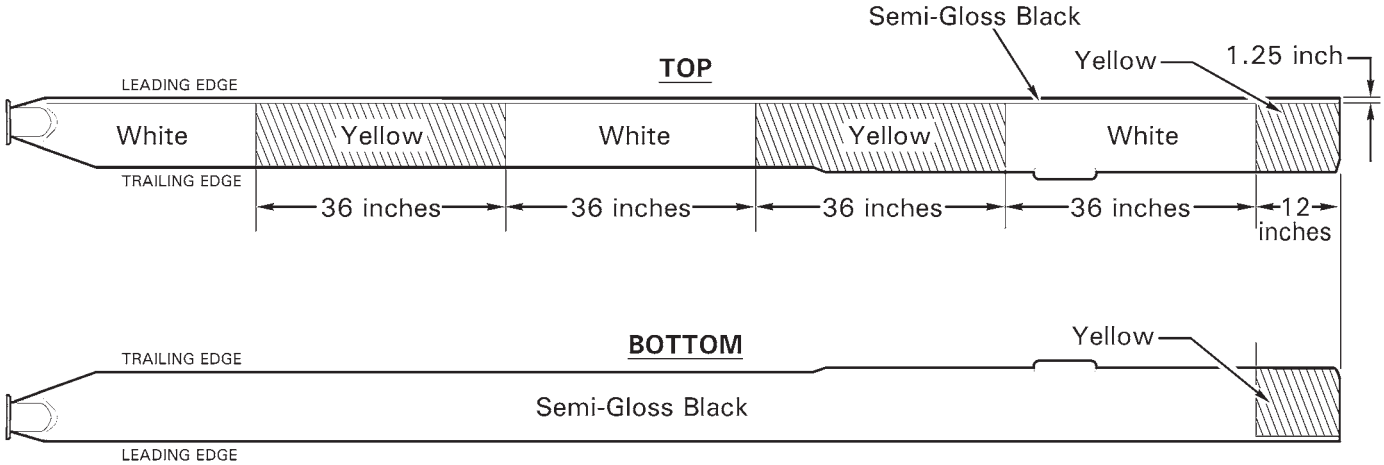

FIGURE 62-21 MAIN ROTOR BLADE PAINT SCHEME

CHAPTER 63

MAIN ROTOR DRIVE SYSTEM

Section	Title	Page
63-00	Description	63.1
63-10	Engine Shaft Weldment	63.1
63-11	(Engine Driveline) Forward Flex Plate Shimming	63.2
63-12	Clutch Assembly	63.5
63-20	Main Rotor Gearbox Assembly	63.6
63-21	Yoke and Seal Replacement	63.8
63-30	Rotor Brake	63.13
63-31	Pad Replacement	63.14
63-40	Rotor RPM	63.14

Intentionally Blank

CHAPTER 63

MAIN ROTOR DRIVE SYSTEM

63-00 Description

The engine is mounted in a 37° nose-up attitude. A sprag-type overrunning clutch mates directly to the splined engine power take-off (PTO) shaft. The clutch is connected to a shaft with flexible couplings at both ends to transmit power to the main gearbox. A ring and pinion spiral bevel gearset at the main gearbox input reduces speed to tail rotor driveline RPM. A second ring and pinion stage reduces speed from tail rotor driveline RPM to main rotor RPM.

The main gearbox is pressure lubricated. The oil is pumped through an airframe-mounted filter and cooled as required by a thermostatically-controlled oil cooler which receives its airflow from the fanwheel. The main gearbox also drives the flight control hydraulic pump.

63-10 Engine Shaft Weldment

A. Removal

1. Remove tailcone cowling assembly per § 53-23. Remove engine cowling assembly per § 53-21.
2. Remove filter and cage assemblies per § 71-22.
3. Refer to Figure 63-1. Remove hardware securing F453-1 box assembly to F234-1 firewall.
4. Remove hardware securing forward A947-2 flex plate assembly to F910-1 (main gearbox) yoke and F642 (engine) shaft weldment forward flange, noting hardware removed. Remove flex plate, and temporarily suppport forward portion of shaft weldment.
5. Remove hardware securing shaft weldment to aft A947-2 flex plate assembly. Remove support, then remove shaft weldment through main gearbox compartment.

B. Installation

1. Refer to Figure 63-1. Position F642 engine shaft weldment in helicopter, and install hardware securing shaft weldment to aft A947-2 plate assembly. Standard torque nuts and palnuts per § 20-32, and torque stripe per Figure 5-1.
2. Shim engine driveline per § 63-11.
3. Install hardware securing F453-1 box assembly to F234-1 firewall.
4. Verify 0.2 inch minimum clearance between shaft weldment and firewall grommet; verify equal gap concentrically between shaft and box assembly hole edges. Adjust F174-1 support weldment rod ends per § 53-31 as required.
5. Install filter and cage assemblies per § 71-22.
6. Install tailcone cowling assembly per § 53-23. Install engine cowling assembly per § 53-21.

63-11 (Engine Driveline) Forward Flex Plate Shimming

> NOTE
>
> The engine driveline is shimmed for 0.040 / 0.000 inch compressive preload. Preload is alleviated by upward movement of main gearbox during flight.

1. Refer to Figure 53-2. Verify F174-1 support weldment rod end engagement measures 0.93 inch from tube end to rod end centerline (nominal; both sides). Verify 0.2 inch minimum clearance between F642 (engine) shaft weldment and firewall grommet; verify equal gap concentrically between shaft and F453-1 box assembly hole edges. Adjust support weldment rod end engagement per Section 53-31 as required.

2. Refer to Figure 63-1. If not previously accomplished, remove hardware securing forward A947-2 flex plate assembly to F910-1 (main gearbox) yoke and F642 (engine) shaft weldment forward flange. Remove flex plate, and temporarily suppport forward portion of shaft weldment.

3. Measure flex plate thickness at bonded washers (4 places) to determine average thickness:

(1st place) _____ inch

(2nd place) + _____ inch

(3rd place) + _____ inch

(4th place) + _____ inch

Total = _____ inch

Total ÷ 4 = _____ inch **(Flex plate average thickness)**

4. a. Position F910-1 (main gearbox) yoke flange arms and F642 (engine) shaft weldment forward flange arms at 3 o'clock and 9 o'clock positions (horizontal). Measure gap between arms to determine average gap:

(3 o'clock position) _____ inch

(9 o'clock position) + _____ inch

Total = _____ inch

Total ÷ 2 = _____ inch **(Average gap between flange arms)**

b. Rotate F642 (engine) shaft weldment 180º, and repeat step a:

(3 o'clock position) _____ inch

(9 o'clock position) + _____ inch

Total = _____ inch

Total ÷ 2 = _____ inch **(Average gap between flange arms)**

63-11 (Engine Driveline) Forward Flex Plate Shimming (continued)

5. Evaluate flange straightness by calculating the difference between the 3 o'clock positions in steps 4a and 4b. Also calculate the difference between the 9 o'clock positions in steps 4a and 4b. If either calculated difference exceeds 0.015 inch, either one or both flanges are bent and require replacement.

6. Using the smaller average gap from step 4a or 4b, subtract the flex plate average thickness determined in step 3:

Smaller average gap between flange arms (step 4a or 4b) _____ inch

Subtract flex plate average thickness (step 3) – _____ inch

Total = _____ inch

7. Select shims per Table 63-1 and install forward A947-2 flex plate assembly. Standard torque hardware per § 20-32 and torque stripe per Figure 5-1. Remove F642 (engine) shaft weldment temporary support.

WARNING

Shim both arms of flanges equally. All fasteners must meet torque requirements given in § 20-33.

Calculated Dimension	Shim required between forward A947-2 flex plate and F910-1 (main gearbox) yoke	Shim required between forward A947-2 flex plate and F642 (engine) shaft weldment forward flange
–0.041 inch or greater negative number	NAS1149F0432P washer between aft A947-2 flex plate assembly and F642 (engine) shaft weldment aft flange and/or F018-1 clutch assembly yoke may be relocated under nut as required to achieve –0.040 / 0.000 inch calculated dimension. Relocate washers as required, and repeat steps 4 thru 7.	
–0.040 / 0.000 inch	None	None
+0.001 / +0.029 inch	NAS1149F0432P washer	None
+0.030 / +0.059 inch	NAS1149F0432P washer	NAS1149F0432P washer
+0.060 / +0.090 inch	NAS1149F0463P washer	NAS1149F0432P washer
+0.091 / +0.121 inch	NAS1149F0463P washer	NAS1149F0463P washer
+0.122 inch or greater positive number	NAS1149F0432P washer between aft A947-2 flex plate assembly and F642 (engine) shaft weldment aft flange and/or F018-1 clutch assembly yoke may be exchanged with NAS1149F0463P washer as required to achieve –0.040 / 0.000 inch calculated dimension. Exchange washers as required, and repeat steps 4 thru 7.	

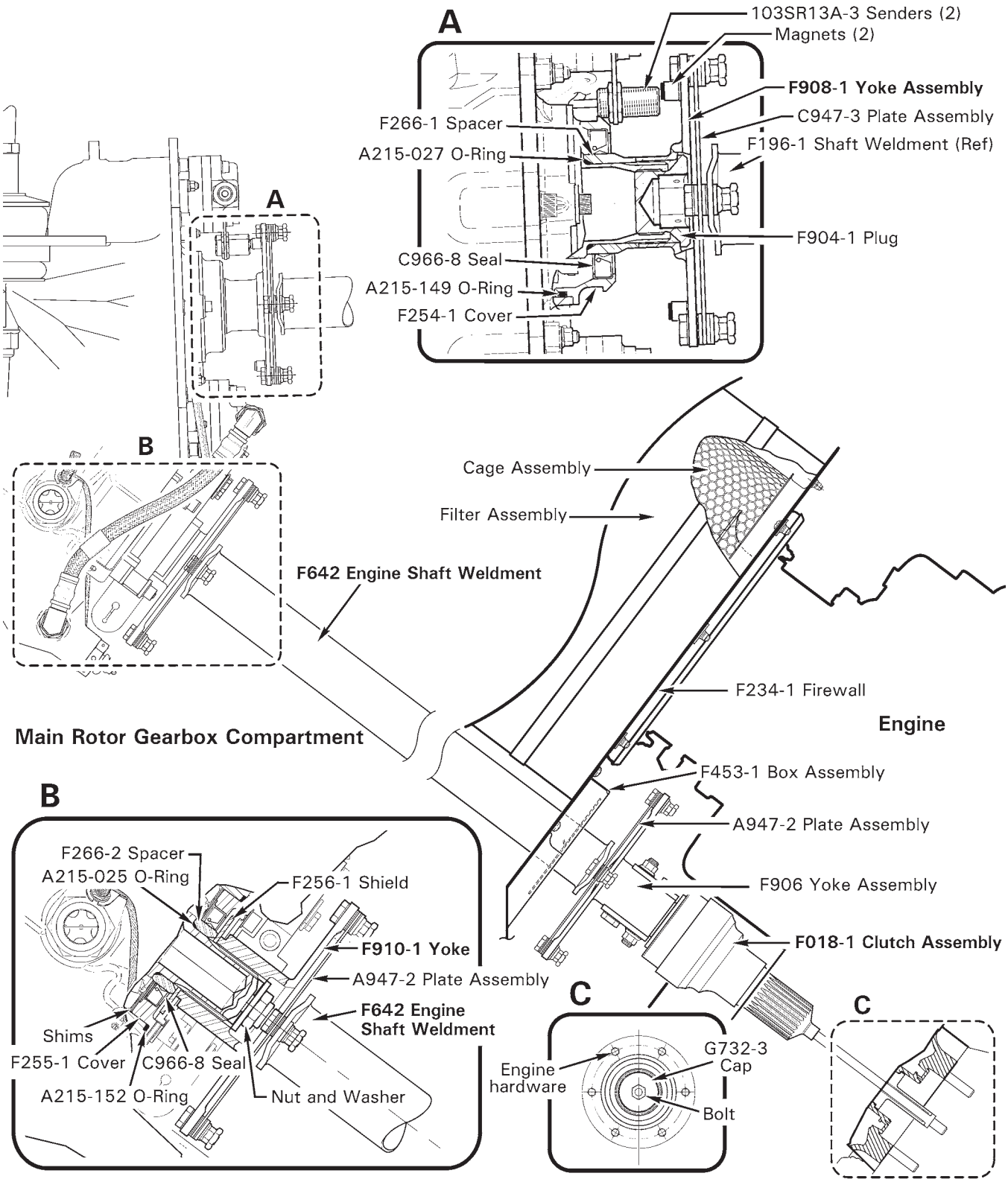

FIGURE 63-1 ENGINE DRIVELINE

63-12 Clutch Assembly

A. Removal

1. Remove engine shaft weldment per § 63-10.
2. Refer to Figure 63-1. Mark F906 yoke assembly and A947-2 plate assembly, to facilitate installation. Remove plate assembly, noting hardware removed.
3. Remove bolt securing G732 cap, spacer (if installed), and F018-1 clutch assembly to Rolls-Royce engine model 250-C300/A1. Remove clutch assembly through main rotor gearbox compartment.

B. Installation

1. Refer to Figure 63-1. Lubricate F018-1 clutch assembly splines using A257-1, -9, or -12.
2. Route clutch assembly through main rotor gearbox compartment, insert clutch assembly in Rolls-Royce engine model 250-C300/A1, and install spacer (earlier R66s), G732 cap, and bolt at rear PTO pad. Standard torque bolt per § 20-32 and torque stripe per Figure 5-1.
3. Install A947-2 plate assembly, as removed. Standard torque fasteners per § 20-32, and torque stripe per Figure 5-1.
4. Install engine shaft weldment per § 63-10.

63-20 Main Rotor Gearbox Assembly

A. Removal

1. Remove main rotor blades per § 62-10.
2. Remove tailcone cowling assembly per § 53-23.
3. Disconnect (pitot system) 15-4-N-O union near G201-1 (servo support) frame assembly. Cap fitting and plug line.
4. Refer to Figure 63-1. Remove hardware securing F908-1 and F910-1 yoke assemblies to plate assemblies, leaving plates attached to shaft weldments. Note hardware removed.
5. Remove hardware securing F121-7 push-pull tube assembly to F339-1 jackshaft weldment, and F121-5 push-pull tube assemblies to D212-5 servo assemblies.
6. Detach cable assembly from (rotor brake assembly) B112-3 spring.
7. Using back-up wrench, disconnect D205-19 and D205-20 hose assemblies from F006-1 main rotor gearbox and D500-3 oil pump. Cap and plug fittings and hoses.
8. Disconnect F059-01 cabin harness assembly plug from F049-01 gearbox harness assembly receptacle. Remove hardware securing A936-3 (ground) wire assembly to F560-1 bulkhead assembly.
9. Remove D277-8 clamp or cut and discard safety wire securing Tygon® tube to G254-1 (fuel) vent assembly, and clear tubing from workspace.
10. Install hoisting equipment per § 7-20, Part A, steps 1 thru 4; remove hoist slack.
11. Remove hardware securing F252-1 strut to F020-1 upper frame assembly. Remove (mounting bolt) nuts and washers securing gearbox to upper frame. Remove aft mounting bolts securing F235-13 strut assemblies to servo support frame, hardware securing struts to upper frame, and struts.
12. Hoist gearbox (with hydraulic installation, servo support frame, and mast fairing assembled) up and away from helicopter.

63-20 Main Rotor Gearbox Assembly (continued)

B. Installation

> **CAUTION**
>
> If F006-1 main gearbox is to be installed in a helicopter equipped with a cargo hook or agricultural sprayer, verify gearbox has B900-12 modification plate adjacent to the gearbox S/N data plate, or has been overhauled (see maintenance records).

1. If installing new C653-3 (aft) or A653-2 (forward) rubber mounts, lubricate mounts using water or A257-8 lubricant and press into gearbox ears.
2. Refer to § 7-20. Hoist F006-1 main rotor gearbox (with hydraulic installation, G201-1 [servo support] frame assembly, and mast fairing assembled) into helicopter, onto F020-1 upper frame assembly.
3. Install F252-1 strut and F235-13 strut assemblies, and install hardware securing strut assemblies to upper frame. Install gearbox mounting bolts and associated hardware, and apply light coat A257-9 anti-seize to threads. Special torque mounting bolts per § 20-33, standard torque bolts securing struts to upper frame per § 20-32, and torque stripe per Figure 5-1.
4. Remove hoisting equipment, and lifting fixture or nylon rope.
5. Install Tygon® tube on G254-1 (fuel) vent assembly and install D277-8 clamp. Verify security.
6. Install hardware securing A936-3 (ground) wire assembly to F560-1 bulkhead assembly. Connect F059-01 cabin harness assembly plug to F049-01 gearbox harness assembly receptacle.
7. Remove caps and plugs and connect D205-19 and D205-20 hose assemblies to gearbox and D500-3 oil pump. Using back-up wrench, special torque hose nuts per § 20-33, and torque stripe per Figure 5-1.
8. Attach (rotor brake) D126-2 cable assembly to (rotor brake assembly) B112-3 spring. Verify 0.25 inch minimum clearance between cable assembly and vent assembly Tygon® tube; adjust cable attachments as required.
9. Install hardware securing F121-7 push-pull tube assembly to F339-1 jackshaft weldment, and F121-5 push-pull tube assemblies to D212-5 servo assemblies. Standard torque hardware per § 20-32 and torque stripe per Figure 5-1.
10. Install hardware securing F908-1 and F910-1 yoke assemblies to plate assemblies, as removed. Shim engine driveline per § 63-11, and tail rotor driveline per § 65-30. Standard torque hardware per § 20-32, and torque stripe per Figure 5-1.
11. Install tailcone cowling assembly per § 53-23.

63-20 Main Rotor Gearbox Assembly (continued)

B. Installation (continued)

12. Install main rotor blades per § 62-10.

> **CAUTION**
>
> Prior to operation of a new, overhauled, or repaired main rotor gearbox, inject 5–6 ounces A257-22 oil into mast tube vent hole (not required if main gearbox has C251-3 Rev Q or subsequent main drive shaft installed). Service gearbox per § 12-11.

63-21 Yoke and Seal Replacement

A. (Tail Rotor Drive) F908-1 Yoke Assembly and Seal Removal

1. Remove tailcone cowling assembly per § 53-23.
2. Remove hardware securing aft F305-5 inlet to scroll assembly; rest inlet on F196-1 fan shaft.
3. Refer to Figure 63-1. Remove forward C947-3 flex plate assembly, noting hardware removed. Remove intermediate C947-3 flex plate assembly, noting hardware removed. Carefully maneuver fan shaft aft to access main gearbox's F908-1 yoke.
4. Refer to Figure 63-2. Set rotor brake. Remove and discard lockwire securing F904-1 plug to yoke and remove plug using a 3/4-inch hex-bit socket. Visually inspect forward C947-3 flex plate assembly and plug for damage. Order replacement parts from RHC Customer Service if damage is found.
5. Remove hardware securing F254-1 cover with C966-8 seal to F006-1 main rotor gearbox. Remove cover.
6. Using hydraulic press, press old seal from cover.

B. (Tail Rotor Drive) F908-1 Yoke Assembly and Seal Installation

1. Refer to Figure 63-1. Remove F266-1 spacer and replace A215-027 o-ring, as required. Reinstall spacer.
2. Clean and dry F254-1 cover; verify open face of seal points toward gearbox and press in new seal until completely seated.
3. Replace A215-149 o-ring, as required. Install cover assembly over pinion shaft.
4. Verify yoke and pinion splines are clean and undamaged. Coat splines of pinion with B270-21 protectant and install F908-1 yoke assembly.
5. Refer to Figure 63-2. Apply light coat of A257-9 anti-seize to F904-1 plug threads, install plug in gearbox, and special torque plug per MM § 20-33.

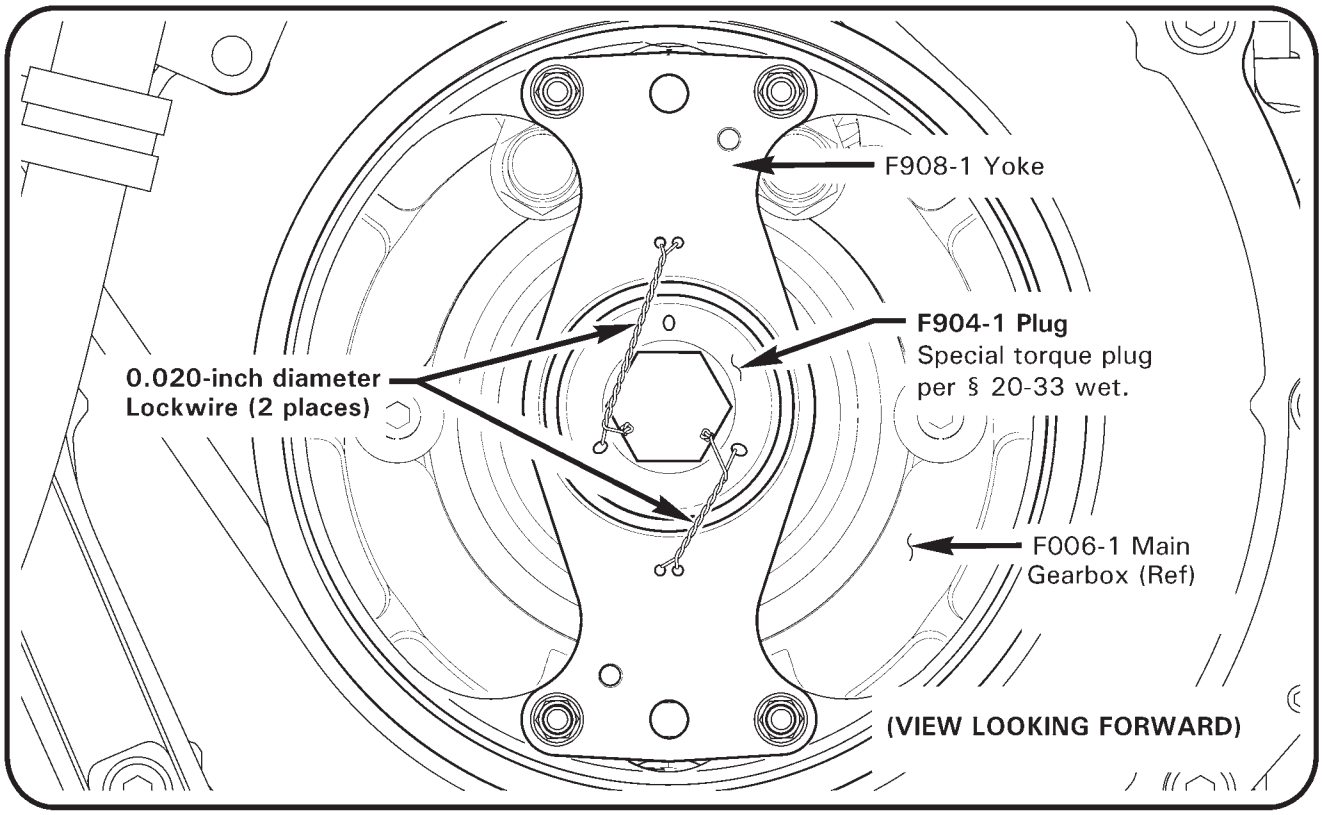

FIGURE 63-2 F908-1 YOKE ASSEMBLY INSTALLATION

63-21 Yoke and Seal Replacement (continued)

B. (Tail Rotor Drive) F908-1 Yoke Assembly and Seal Installation (continued)

6. In two places, install 0.020-inch diameter lockwire and safety plug to yoke with pigtails inside recess of plug as shown.
7. Install forward C947-3 flex plate assembly, using hardware removed (replace palnuts). Standard torque hardware per MM § 20-32 and torque stripe per MM Figure 5-1. Ensure safety wire is not contacting flex plate.
8. Install and shim intermediate C947-3 flex plate assembly per MM § 65-30.
9. Install hardware securing aft F305-5 inlet to scroll assembly. Verify 0.10 inch minimum gap between fanwheel assembly and inlet.
10. Install tailcone cowling assembly per § 53-23.
11. Set hall effect sender-to-magnet gap per § 63-40.

63-21 Yoke and Seal Replacement (continued)

C. (Engine-Driven) F910-1 Yoke Assembly and Seal Removal

1. Remove tailcone cowling assembly per § 53-23. Remove engine cowling assembly per § 53-21.
2. Drain main gearbox oil per § 12-11.
3. Refer to Figure 63-1. Remove hardware securing A947-2 (forward) plate assembly to F910-1 yoke assembly, and A947-2 (aft) plate assembly to F642 shaft weldment, noting hardware removed. Support weldment to allow clearance for yoke removal.
4. Place a wood block between firewall and yoke flange (to prevent yoke from rotating) or engage rotor brake. Remove nut and washer securing yoke to pinion, then remove yoke.
5. Remove rotor brake per § 63-30.
6. Remove F255-1 cover with C966-8 seal, but do not remove shims under pinion bearing. Remove F266-2 spacer.
7. Using hydraulic press, press old seal from cover.

D. (Engine-Driven) F910-1 Yoke Assembly and Seal Installation

CAUTION

Do not remove shims under pinion bearing. Shims control bearing preload and gear backlash.

1. Refer to Figure 63-1. Replace A215-025 o-ring, as required.
2. Clean and dry F255-1 cover; verify open face of seal points toward gearbox and press in new seal until completely seated.
3. Replace A215-152 o-ring, as required. Install cover assembly over pinion shaft. Install F266-2 spacer.
4. Install rotor brake per § 63-30.
5. Service main gearbox per § 12-11.

Intentionally Blank

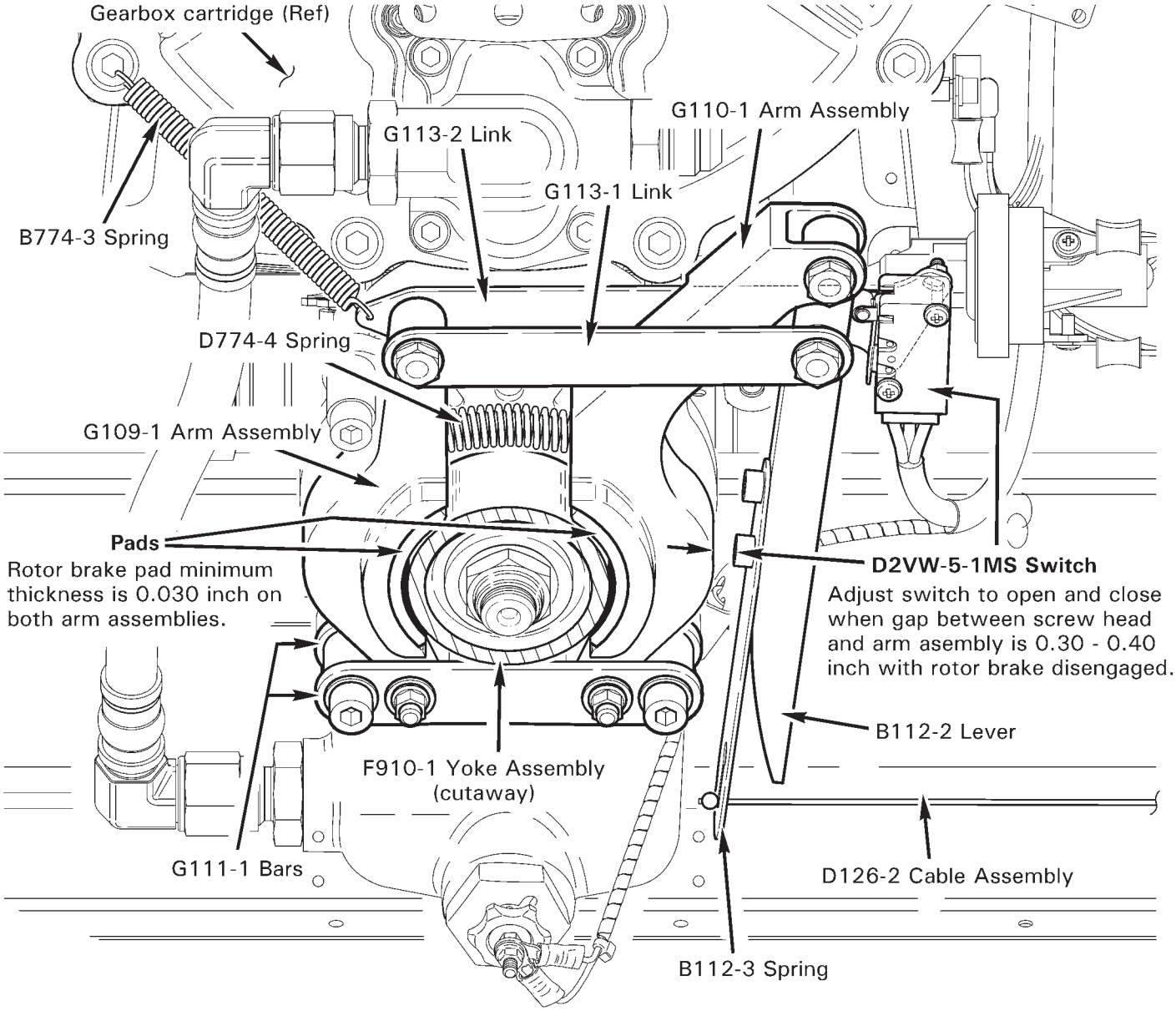

FIGURE 63-3 ROTOR BRAKE

63-30 Rotor Brake

A. Removal

1. Remove (engine-driven) F910-1 yoke assembly per § 63-21, Part C steps 1 thru 3.
2. Refer to Figure 63-3. Detach D126-2 cable assembly from B112-3 spring. Detach B774-3 spring from gearbox cartridge retaining screw or rotor brake assembly link.
3. Remove hardware securing D2VW-5-1MS switch to brake assembly link.
4. Remove hardware and spacers securing brake assembly mounting bars to gearbox cartridge. Remove G033-1 brake assembly F256-1 shield (see Figure 63-1).

B. Installation

1. Refer to Figure 63-3. Verify minimum 0.030 inch rotor brake pad thickness on both arm assemblies.
2. Verify F910-1 yoke assembly and pinion splines are clean and undamaged. Coat splines of pinion with B270-21 protectant.
3. Install F256-1 shield, then position G033-1 brake assembly over pinion and install spacers and hardware securing brake assembly mounting bars to gearbox cartridge. Standard torque screws per § 20-32 and torque stripe per Figure 5-1.
4. Install yoke on pinion shaft. Place a wood block between firewall and yoke flange (to prevent yoke from rotating). Install pinion retaining nut and washer and special torque nut per § 20-33. Coat nut and exposed pinion splines with B270-21 protectant. When dry, torque stripe per Figure 5-1.
5. Attach B774-3 spring to gearbox cartridge retaining screw and rotor brake assembly link. Attach D126-2 cable assembly to B112-3 spring.
6. Install hardware securing D2VW-5-1MS switch to brake assembly link, but do not tighten. Adjust switch to open and close when gap between B112-3 spring lower retaining screw screw head and G110-1 arm assembly is 0.30–0.40 inch with brake disengaged. Pivot switch about lower fastener as required and tighten fasteners to set gap. Function check rotor brake light.
7. Install hardware securing A947-2 (forward) plate assembly to F910-1 yoke assembly, and A947-2 (aft) plate assembly to F642 shaft weldment. Shim engine driveline per § 63-11. Standard torque hardware per § 20-32, and torque stripe per Figure 5-1.
8. Install tailcone cowling assembly per § 53-23. Install engine cowling assembly per § 53-21.

63-31 Pad Replacement

A. Arm Removal

NOTE

Rotor brake pad minimum thickness is 0.030 inch on both arm assemblies. Replace arm assemblies when pads are worn beyond limit.

1. Remove rotor brake per § 63-30.
2. Remove hardware and spacers securing G109-1 arm assembly to (2) G111-1 bars and G113-1 & -2 links. Remove D774-4 spring.
3. Remove hardware and spacers securing G110-1 arm assembly to (2) G111-1 bars and B112-2 lever. Loosen fastener securing G113-1 & -2 links to B112-2 lever.

B. Arm Installation

1. Refer to Figure 63-3. Lubricate spacers with A257-1 grease and install in new G110-1 arm assembly. Install hardware securing G110-1 arm assembly to (2) G111-1 bars and B112-2 lever, but do not torque.
2. Lubricate spacers with A257-1 grease and install in new G109-1 arm assembly. Install D774-4 spring, and install hardware securing G109-1 arm assembly to (2) G111-1 bars and G113-1 & -2 links. Standard torque all bolts and torque stripe per Figure 5-1.
3. Install rotor brake per § 63-30.

63-40 Rotor RPM

1. Remove tailcone cowling assembly per § 53-23.
2. Refer to Figure 63-1. Measure gap between both F908-1 yoke assembly magnets at each 103SR13A-3 (Hall effect) sender. Verify gap is between 0.030 ± 0.010 inch.
3. As required, loosen sender jam nuts and adjust to obtain 0.030 ± 0.010 inch gap. Special torque jam nuts per § 20-33 and torque stripe per Figure 5-1.
4. Install tailcone cowling assembly per § 53-23.

CHAPTER 64

TAIL ROTOR

Section	Title	Page
64-00	Description	64.1
64-10	Tail Rotor Assembly	64.1
	64-11 Static Balance	64.5
64-20	Tail Rotor Blades	64.8
64-30	Tail Rotor Blade Inspection and Repair	64.9
	64-31 Scratches and Corrosion	64.9
	64-32 Dents	64.9
	64-33 Erosion	64.11
	64-34 Root Fitting Damage	64.11
	64-35 Nicks and Notches	64.11
	64-36 Painting	64.11
64-40	Tail Rotor Hub	64.13
	64-41 Bearing Replacement	64.13
	64-42 Inspection	64.13

Intentionally Blank

CHAPTER 64

TAIL ROTOR

64-00 Description

The R66 tail rotor assembly is a conventional, two-bladed teetering rotor system.

Tail rotor blades are constructed of a wrap-around aluminum skin, bonded to aluminum honeycomb and a forged aluminum root fitting. Self-lubricating spherical bearings in the root fitting allow blades to change pitch.

Tail rotor blades are assembled to the hub with a fixed precone angle.

The tail rotor aluminum hub mounts to the gearbox output shaft by teeter hinge. Elastomeric bearings in the hub allow the rotor to teeter. The tail rotor hub teetering stop is a urethane bumper, attached to the output shaft.

64-10 Tail Rotor Assembly

Refer to R66 Illustrated Parts Catalog (IPC) Figure 64-1.

A. Removal

1. Refer to Figure 64-1. Tag each pitch link with corresponding blade serial number for reinstallation. Remove hardware securing pitch links to tail rotor blades, noting hardware removed.

> NOTE
>
> Tail rotor pitch link-to-blade attach bolts may be different lengths and/or have different washers installed under nut for dynamic balancing. Reinstall hardware as removed.

2. Remove nut and A141-14 washer securing C119-2 bumper to tail rotor gearbox output shaft.

3. Remove teeter hinge bolt, then slide tail rotor assembly and bumper off of shaft.

> NOTE
>
> Protect tail rotor assembly from damage when maintenance is performed on workbench.

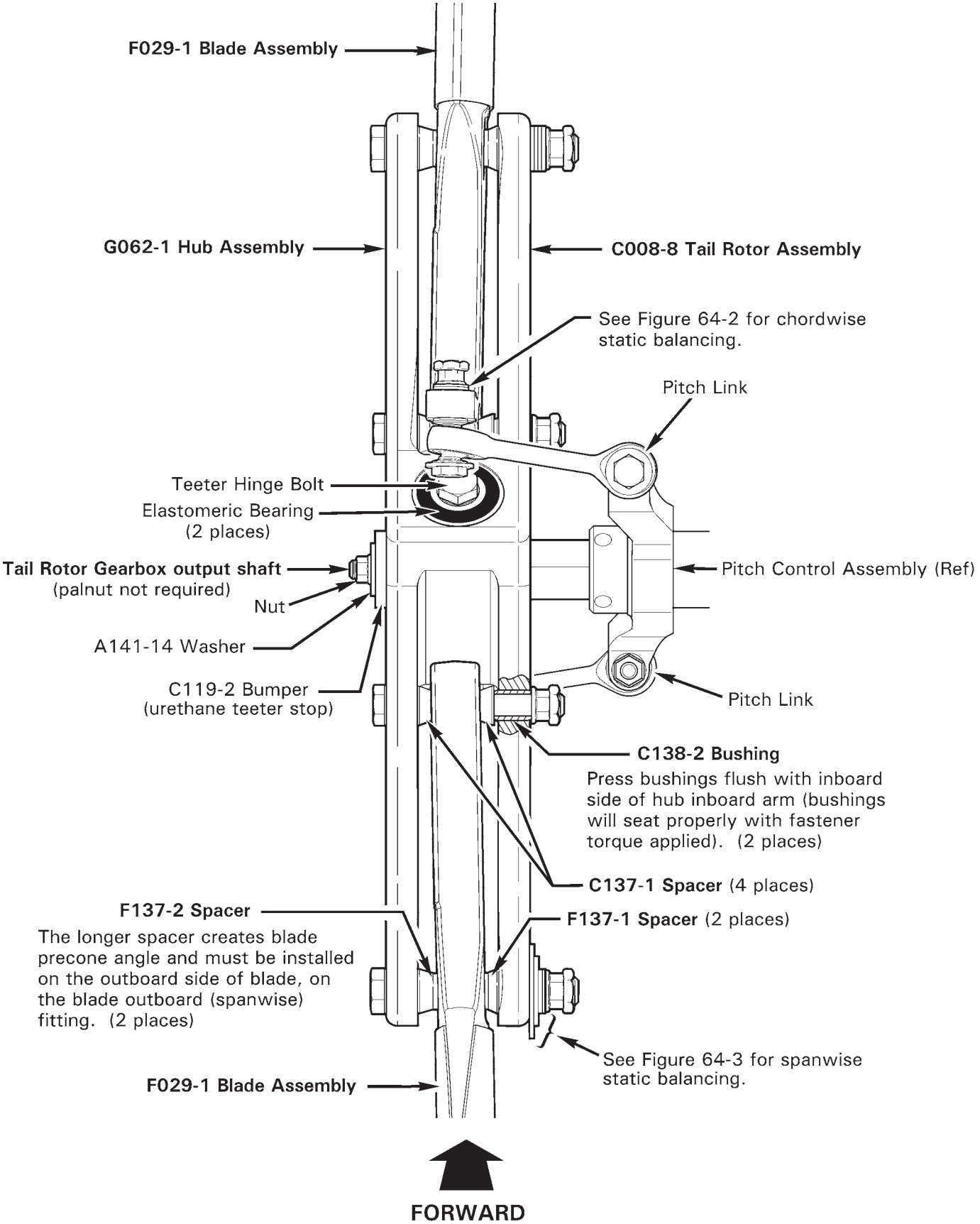

FIGURE 64-1 TAIL ROTOR INSTALLATION

64-10 Tail Rotor Assembly (continued)

B. Installation

1. Refer to Figure 64-1. Position tail rotor assembly on tail rotor gearbox output shaft. Verify tail rotor is installed for clockwise rotation when viewed from left side of aircraft. Verify blades cone toward tail rotor gearbox.

2. Remove tags, and match tail rotor blade serial number to corresponding pitch link. Install teeter hinge bolt; tighten nut until elastomeric bearing metal spacers contact output shaft, but do not torque.

3. Install dynamic balancing hardware securing tail rotor blades to pitch links, as removed. Standard torque nuts & palnuts per Section 20-32, and torque stripe per Figure 5-1.

> NOTE
>
> If dynamic balancing hardware information is unknown, install standard hardware for initial dynamic check.

4. Fabricate a tracking aid using 1x12-inch aluminum sheet; make a 90º bend 2 inches from one end. With tail rotor horizontal, tape tracking aid to tailcone near blade tip.

5. Rotate tail rotor drive shaft and mark tracking aid where each blade tip drain hole passes. Adjust (teeter) tail rotor until both blade tips pass the same point within 0.125 inch. Special torque teeter hinge bolt per Section 20-33. Recheck track. Repeat step until blades are tracked.

6. Install palnut, standard torque per Section 20-32, and torque stripe per Figure 5-1. Remove tracking aid.

7. Teeter tail rotor back and forth. Verify teeter hinge bolt, bearing metal spacers, washers, and nuts remain stationary when tail rotor is teetered.

8. Install C119-2 bumper, A141-14 washer, and nut. Standard torque nut per Section 20-32 and torque stripe per Figure 5-1.

9. Dynamically balance tail rotor per Section 18-20.

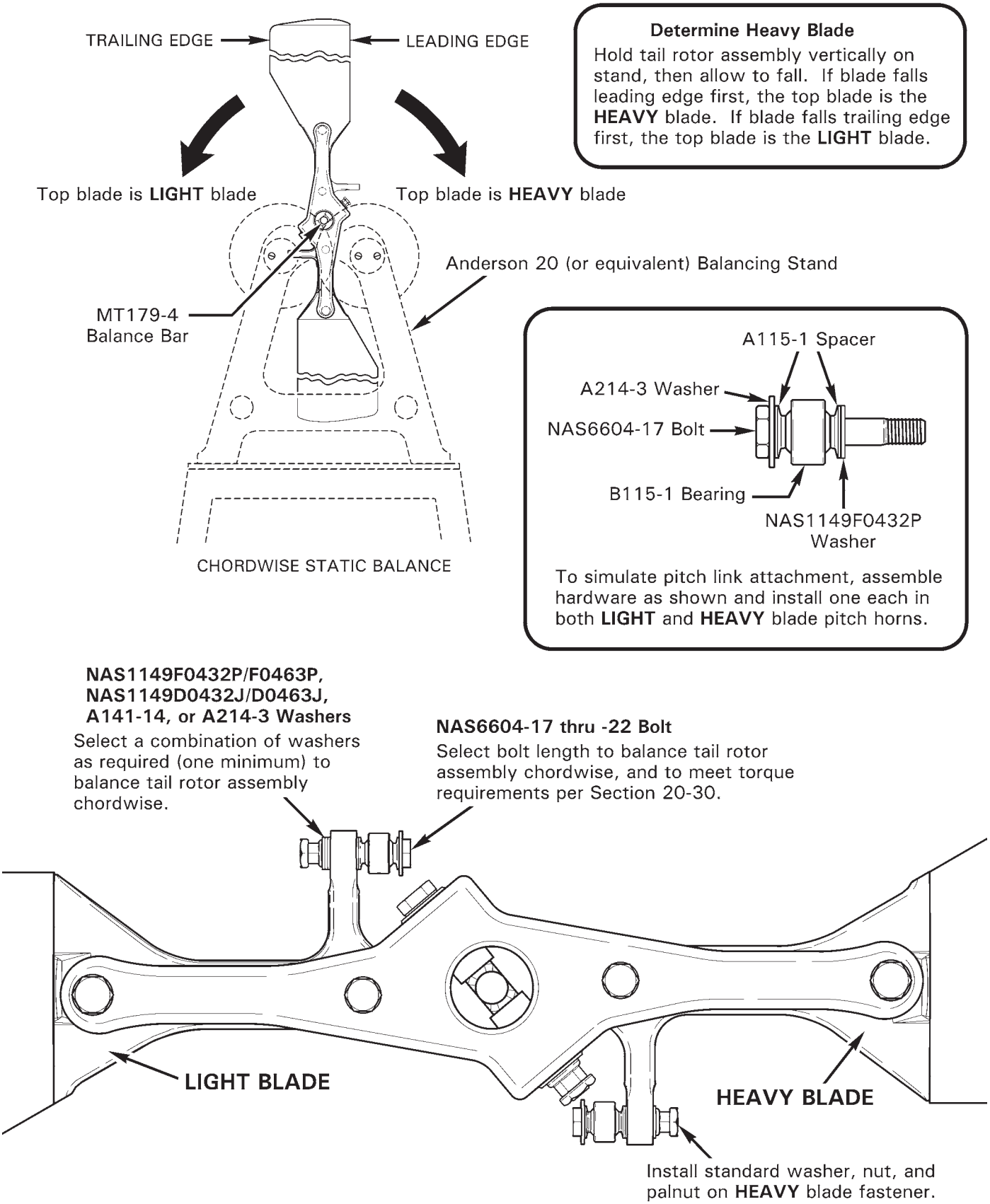

Determine Heavy Blade

Hold tail rotor assembly vertically on stand, then allow to fall. If blade falls leading edge first, the top blade is the **HEAVY** blade. If blade falls trailing edge first, the top blade is the **LIGHT** blade.

To simulate pitch link attachment, assemble hardware as shown and install one each in both **LIGHT** and **HEAVY** blade pitch horns.

NAS1149F0432P/F0463P, NAS1149D0432J/D0463J, A141-14, or A214-3 Washers

Select a combination of washers as required (one minimum) to balance tail rotor assembly chordwise.

NAS6604-17 thru -22 Bolt

Select bolt length to balance tail rotor assembly chordwise, and to meet torque requirements per Section 20-30.

FIGURE 64-2 CHORDWISE STATIC BALANCE

64-11 Static Balance

Refer to R66 Illustrated Parts Catalog (IPC) Figure 64-1.

A. Chordwise Static Balance

1. Refer to Figure 64-2. Install MT179-4 balance bar into tail rotor assembly. Install teeter hinge bolt, and special torque nut to 350 in.-lb. Using a carpenters square, adjust balance bar until approximately perpendicular to hub.

2. Place tail rotor assembly with balance bar on Anderson 20 or equivalent balancing stand. Hold tail rotor assembly vertically, then allow to fall. If the blade falls leading edge first, the top blade is the heavy blade. If the blade falls trailing edge first, the top blade is the light blade.

3. To simulate pitch link attachment, assemble hardware as shown and install in blade pitch horns. Install standard washer, nut, and palnut on heavy blade fastener. Standard torque hardware per Section 20-32.

4. Chordwise balancing is achieved by varying NAS6604 bolt length and nut-side washers on light blade fastener. Select bolt length and washers for balancing, and to meet torque requirements per Section 20-30. Standard torque hardware per Section 20-32, and repeat step 2.

5. Blades are balanced chordwise when blade does not fall when positioned vertically on balancing stand. Repeat step 4, adjusting bolts and washers until blades are balanced.

6. Perform spanwise static balance per Section 64-11 Part B.

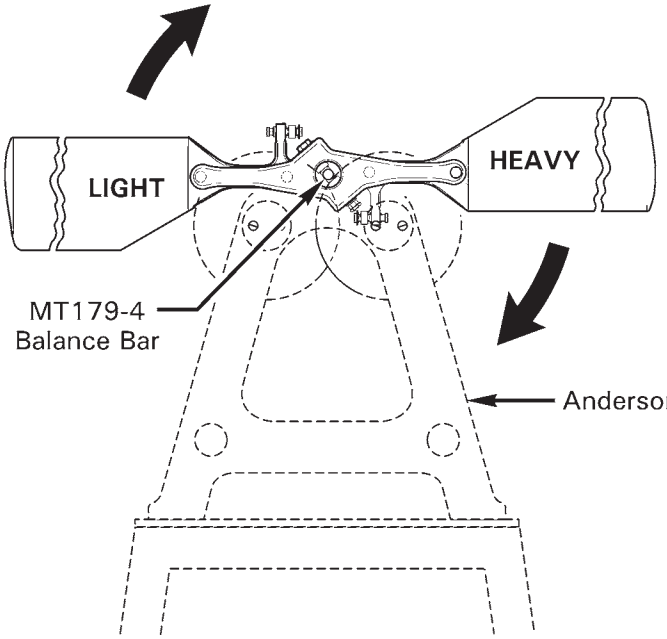

Determine Heavy Blade

Hold tail rotor assembly horizontally on stand, then allow to fall. The falling blade is the **HEAVY** blade; the rising blade is the **LIGHT** blade.

SPANWISE STATIC BALANCE

(4) NAS1149F0632P/F0663P, NAS1149D0632J/D0663J, C141-23, or C141-24 Washers

Select a combination of four washers to balance tail rotor assembly spanwise. Place largest washers closest to hub assembly.

Install (4) NAS1149D0663J washers under nut of **HEAVY** blade outboard fastener for initial spanwise static balance check.

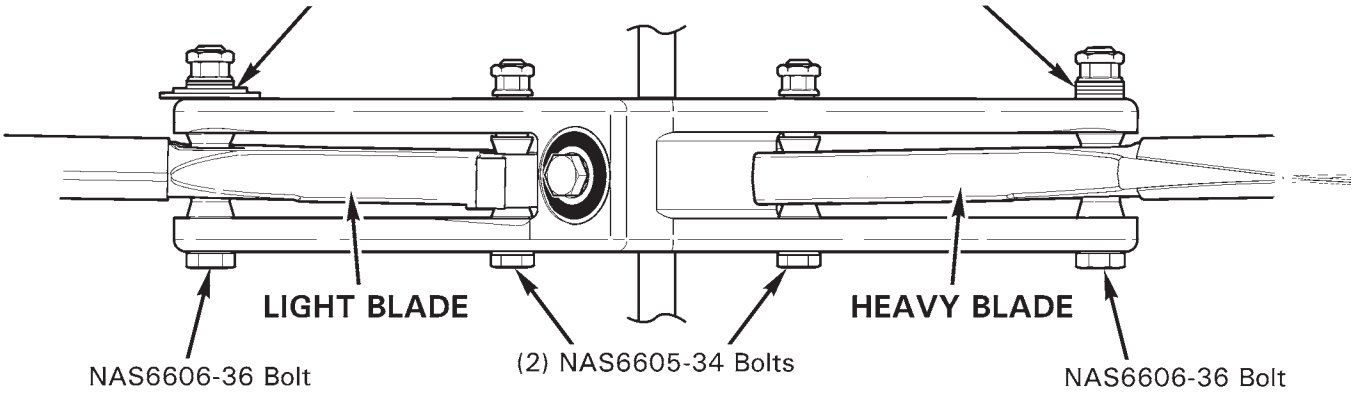

FIGURE 64-3 SPANWISE STATIC BALANCE

64-11 Static Balance (continued)

Refer to R66 Illustrated Parts Catalog (IPC) Figure 64-1.

B. Spanwise Static Balance

CAUTION

Verify four washers installed under each outboard blade fastener prior to tail rotor assembly installation or dynamic balance.

1. Refer to Figure 64-3. Install standard hardware for initial spanwise static balance check. Standard torque fasteners per Section 20-32.

2. Install MT179-4 balance bar into tail rotor assembly. Install teeter hinge bolt, and special torque nut to 350 in.-lb. Using a carpenters square, adjust balance bar until approximately perpendicular to hub.

3. Place tail rotor assembly with balance bar on Anderson 20 or equivalent balancing stand. Hold tail rotor assembly horizontally, then allow to fall. The falling blade is the heavy blade; the rising blade is the light blade.

4. Spanwise balancing is achieved by varying nut-side washer size on light blade outboard fastener. Four washers are required under outboard fastener nuts; place largest washers closest to hub assembly. Select washers for balancing, standard torque hardware per Section 20-32, and repeat step 3.

5. Blades are balanced spanwise when blade does not fall when positioned horizontally on balancing stand. Repeat step 4, adjusting outboard fastener washers until blades are balanced.

6. Recheck chord and spanwise balance. Tail rotor assembly must be statically balanced within 4 inch-grams. Remove MT179-4 balance bar.

64-20 Tail Rotor Blades

Refer to R66 Illustrated Parts Catalog (IPC) Figure 64-1.

> NOTE
>
> Protect tail rotor assembly from damage when maintenance is performed on workbench.

A. Removal

1. Remove tail rotor assembly per Section 64-10.

2. Refer to Figure 64-1. Remove hardware securing F029-1 blade assemblies to G062-1 hub assembly. Remove blades, spacers, and hardware; do not remove C138-2 bushings unless required.

B. Installation

> **CAUTION**
>
> F029-1 tail rotor blades are a matched set from RHC. If only one blade is being replaced, contact RHC Technical Support with airworthy blade serial number for a matching replacement blade.

1. Inspect tail rotor hub per Section 64-30, as required.

2. Refer to Figure 64-1. If removed, apply light coat of approved primer per Section 20-70 to outer surface of C138-2 bushings; while primer is wet, press bushings flush with inboard side of hub inboard arm (bushings will seat properly with fastener torque applied).

> **CAUTION**
>
> F137-2 spacer creates blade precone angle and must be installed on the outboard side of blade, on the blade outboard (spanwise) fitting.

3. Install tail rotor blades and spacers in hub. Assemble blades (if viewed from left side of aircraft) for clockwise rotation, to cone toward tail rotor gearbox. Install hardware securing blades to hub; install standard hardware on outboard fasteners for initial tail rotor assembly static balance check. Tighten fasteners, but do not torque.

4. Touch-up bolt heads using approved paint per Section 20-70.

5. Perform tail rotor assembly static balance per Section 64-11.

64-30 Tail Rotor Blade Inspection and Repair

This blade repair procedure outlines the repair limits, methods and materials used for repairing tail rotor blades. Repairs are limited to blending out scratches, dents, nicks, removing corrosion, and refinishing the blades. The inspections, repairs and limitations contained herein refer to damage sustained in service, including damage during shipping and handling (manufacturing irregularities are treated separately by the factory). In-service damage will generally exhibit paint scuffing or scratches and often times freshly-exposed metal in the form of scratches in the finish. If there are any questions as to the possibility of a manufacturing irregularity, contact RHC Technical Support.

CAUTION

A blade may be repaired more than one time. However, in no case can more than the maximum material be removed or the maximum dent depth be exceeded in any one location.

Refer to Section 62-40 for measuring blade damage.

64-31 Scratches and Corrosion

1. Refer to Figure 64-4. Verify damage does not exceed the following limits:

   a. 0.008 inch maximum damage between RS 18.00 and RS 30.00.
   b. 0.005 inch maximum damage more than 15° spanwise between RS 18.00 and inboard.
   c. 0.008 inch maximum damage less than 15° spanwise between RS 18.00 and inboard.

2. Refer to Section 62-50 (main rotor) for repair procedures for damage within limits. Blend out scratches or corrosion on skins with a 0.10 inch blend radius.

64-32 Dents

CAUTION

Tap-test dented areas in honeycomb. If any voids are found associated with dents, contact RHC Customer Service.

Tap-test voids, debonds, and dents in blades using an AN970-4 washer or 1965 or later U.S. quarter dollar coin in good condition.

CAUTION

When dented areas are found, inspect opposite side of the blade for a bulge. Replace blade with a bulge greater than 0.010 inch opposite a dent.

CAUTION

Do not repair any dent that has a sharp cut or break in the skin. If necessary, locally penetrant inspect, keeping penetrant materials away from bond joints.

WARNING

Any damaged tail rotor blade that cannot be repaired within the limits of this section must be removed from service immediately and marked "scrap."

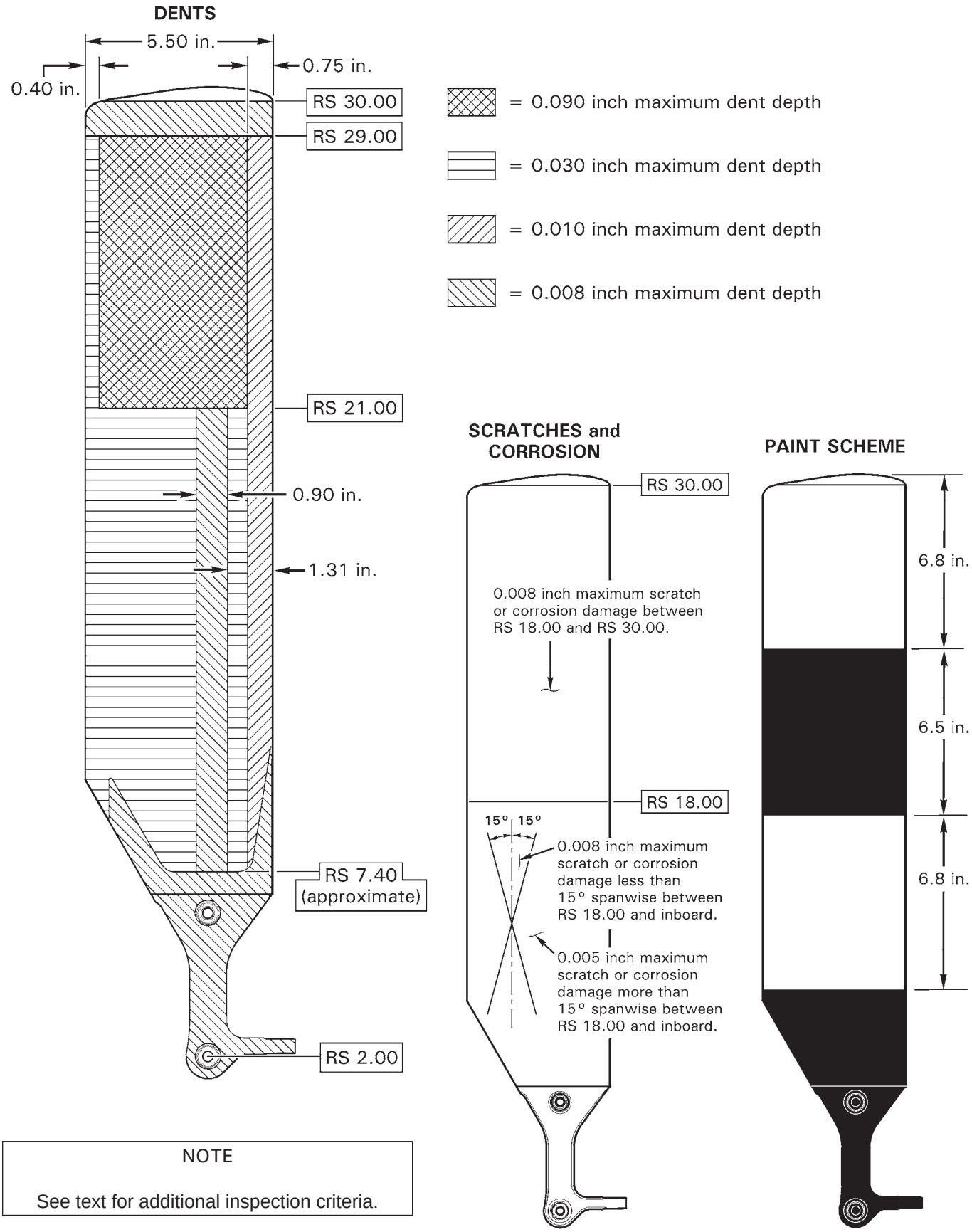

NOTE

See text for additional inspection criteria.

FIGURE 64-4 TAIL ROTOR BLADE INSPECTION CRITERIA

64-32 Dents (continued)

A. Skins

1. Refer to Figure 64-4. Smooth, round bottom dents with 0.060 inch minimum radius may be repaired when damage does not exceed the following limits:

   a. 0.010 inch maximum depth between leading edge and 0.75 inch aft (chordwise).
   b. 0.75 inch aft (chordwise) of leading edge:
      i. 0.090 inch maximum dent depth between RS 21.00 and RS 29.00.
      ii. 0.030 inch maximum dent depth between RS 21.00 and inboard.
   c. 0.030 inch maximum depth between trailing edge and 0.40 inch forward (chordwise).
   d. 0.008 inch maximum depth between RS 29.00 and RS 30.00.
   e. 0.008 inch maximum depth over the skin-to-root fitting bond joint and carbon fiber bonded area.

2. Refer to Section 62-50 (main rotor) for repair procedures for damage within limits.

64-33 Erosion

Replace any blade where erosion has caused deformation or ripples in the leading edge.

64-34 Root Fitting Damage

1. Verify damage does not exceed the following limits:

   a. No repairs permitted within 1.5-inch diameter circle from center of spherical bearing.
   b. 0.040 inch maximum depth on other root fitting exposed areas.

2. Refer to Section 62-50 (main rotor) for repair procedures for damage within limits. Blend out root fitting damage with a minimum 1.0 inch blend radius.

64-35 Nicks and Notches

A. Trailing Edge

1. Verify damage does not exceed the following limits:

   a. 0.050 inch maximum in the extreme trailing edge.

2. Refer to Section 62-50 (main rotor) for repair procedures for damage within limits. Blend out nicks and notches in blade trailing edge for 1.0 inch minimum each side of nick or notch.

64-36 Painting

Refer to Figure 64-4. See Section 62-52 (main rotor) for painting procedures.

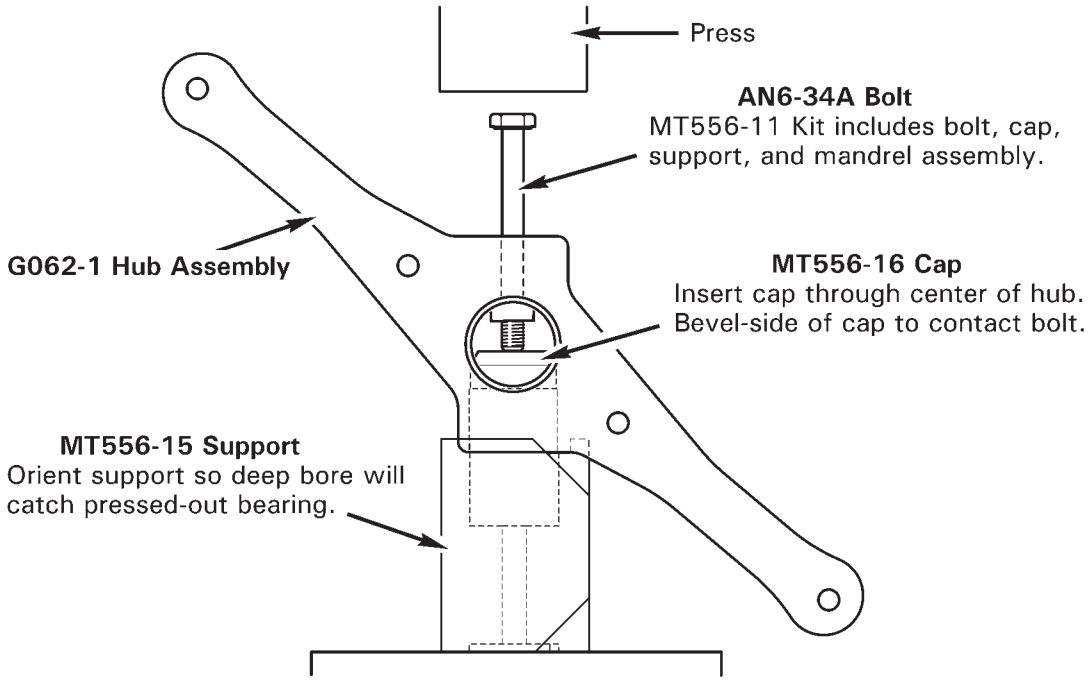

FIGURE 64-5 ELASTOMERIC BEARING REMOVAL

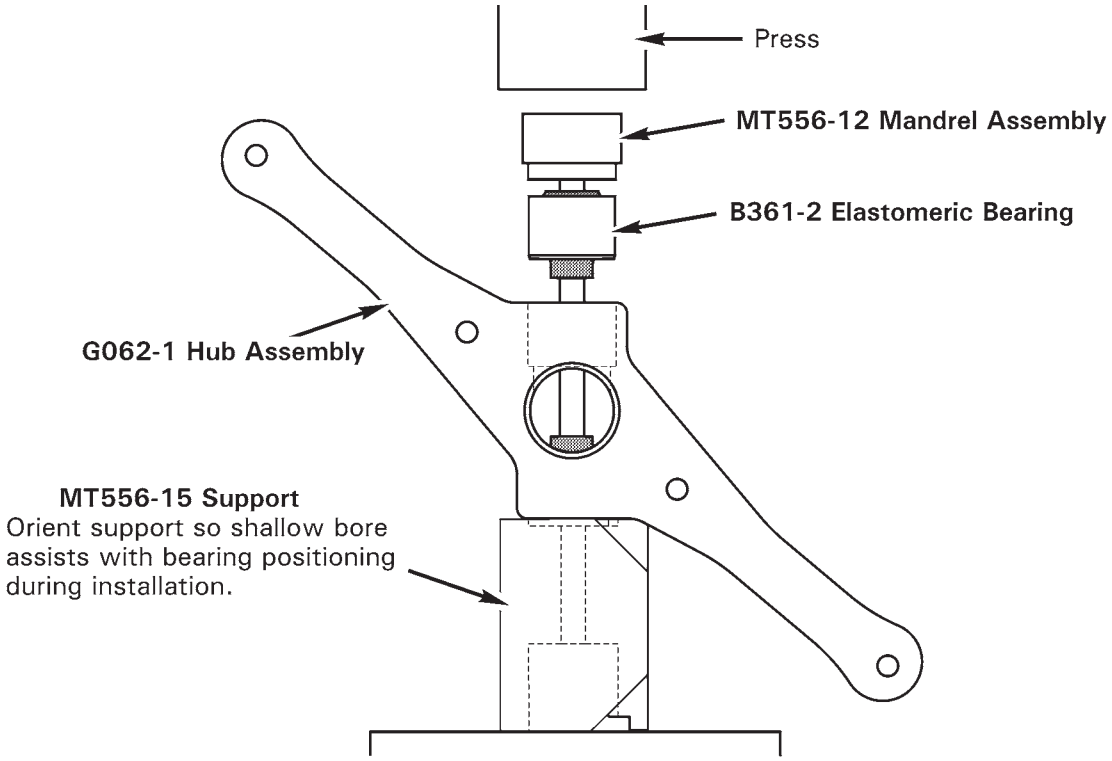

FIGURE 64-6 ELASTOMERIC BEARING INSTALLATION

64-40 Tail Rotor Hub

64-41 Bearing Replacement

Refer to R66 Illustrated Parts Catalog (IPC) Figure 64-1.

A. Removal

1. Remove tail rotor assembly per Section 64-10.
2. Remove tail rotor blades per Section 64-20.
3. Refer to Figure 64-5. Press bearing(s) from hub using MT556-11 bearing removal (and installation) tools.

B. Installation

1. Inspect tail rotor hub per Section 64-42.

> **CAUTION**
>
> Elastomeric bearings are a slight press fit in tail rotor hub bores. Inspect bores for fretting; if fretting is detected, hub is unairworthy.

2. Refer to Figure 64-6. Using Q-tip, apply light coat of approved primer per Section 20-70 to bottom of hub bearing bore. Apply a thin line of primer to center of bearing outside diameter. While primer is wet, press bearing into hub using MT556-11 bearing removal and installation tools. Wipe away excess primer.
3. Repeat steps for second bearing, as required.

64-42 Inspection

1. Remove tail rotor blades per Section 64-20, and inspect blades per Section 64-30.
2. Remove elastomeric bearings per Section 64-41.
3. Clean G062-1 tail rotor hub using approved solvent per Section 20-70.
4. Visually inspect for indications of damage, wear, nicks, dings, and corrosion. Check arms for straightness, bolt holes for elongation, and bearing bores for fretting or galling. Corrosion is not permitted on clamp-up surfaces.
5. For suspect areas, locally remove paint from hub using approved paint stripper per Section 20-70; dye penetrant or fluorescent penetrant inspect per Section 20-40.
6. Touch-up bare metal using approved materials per Section 20-70.
7. Install elastomeric bearings per Section 64-41.
8. Install tail rotor blades per Section 64-20.

Intentionally Blank

CHAPTER 65

TAIL ROTOR DRIVE SYSTEM

Section	Title	Page
65-00	Description	65.1
65-10	Tail Rotor Drive Fan Shaft	65.1
65-20	Tail Rotor Drive Shaft Assembly	65.3
65-21	Runout	65.5
65-22	Damper Assembly	65.7
65-30	(Tail Rotor Driveline) Intermediate Flex Plate Shimming	65.8
65-40	Tail Rotor Gearbox Assembly	65.10
65-41	Output Shaft Seal Replacement	65.11
65-42	Input Shaft Seal Replacement	65.12

Intentionally Blank

CHAPTER 65

TAIL ROTOR DRIVE SYSTEM

65-00 Description

The tail rotor driveline consists of an intermediate shaft running aft from the main gearbox and a long tail rotor driveshaft which runs the length of the tailcone. Flexible couplings are located at both ends of the intermediate shaft. The long tail rotor driveshaft has a support bearing at its front end and a damper bearing approximately one-third of the way aft on the shaft. The cooling fan is mounted to the intermediate shaft. The tail gearbox contains a single 90º splash-lubricated spiral-bevel gearset which increases speed to tail rotor RPM.

65-10 Tail Rotor Drive Fan Shaft

Refer to R66 Illustrated Parts Catalog (IPC) Figure 65-1.

CAUTION

Do not damage F196-1 fan shaft aft yoke or G174-1 fanwheel assembly mid plate during fan shaft removal or installation.

A. Removal

1. Remove tailcone cowling assembly per § 53-23.
2. Refer to Figure 65-1. Remove hardware securing F252-1 strut assembly to upper frame assembly and remove strut.
3. Remove hardware securing intermediate C947-3 flex plate assembly to F196-1 (tail rotor) fan shaft aft flange and D224 tail rotor drive shaft assembly forward yoke, noting hardware removed. Remove flex plate, and temporarily support aft portion of fan shaft.
4. Remove hardware securing fan shaft to forward C947-3 flex plate assembly.
5. Remove hardware securing fan shaft to G174-1 fanwheel assembly. Carefully pull fan shaft forward through fanwheel assembly, rotating yoke as necessary. Remove temporary support.

B. Installation

1. Refer to Figure 65-1. Route F196-1 fan shaft aft through fanwheel assembly, rotating yoke as necessary. Install hardware securing fan shaft to G174-1 fanwheel assembly. Standard torque nuts and palnuts per § 20-32, and torque stripe per Figure 5-1.
2. Install hardware securing fan shaft to forward C947-3 plate assembly. Standard torque nuts and palnuts per § 20-32, and torque stripe per Figure 5-1. Shim tail rotor driveline per § 65-30.
3. Install F252-1 strut assembly and hardware securing strut to upper frame assembly. Standard torque nuts per § 20-32 and torque stripe per Figure 5-1.
4. Install tailcone cowling assembly per § 53-23.

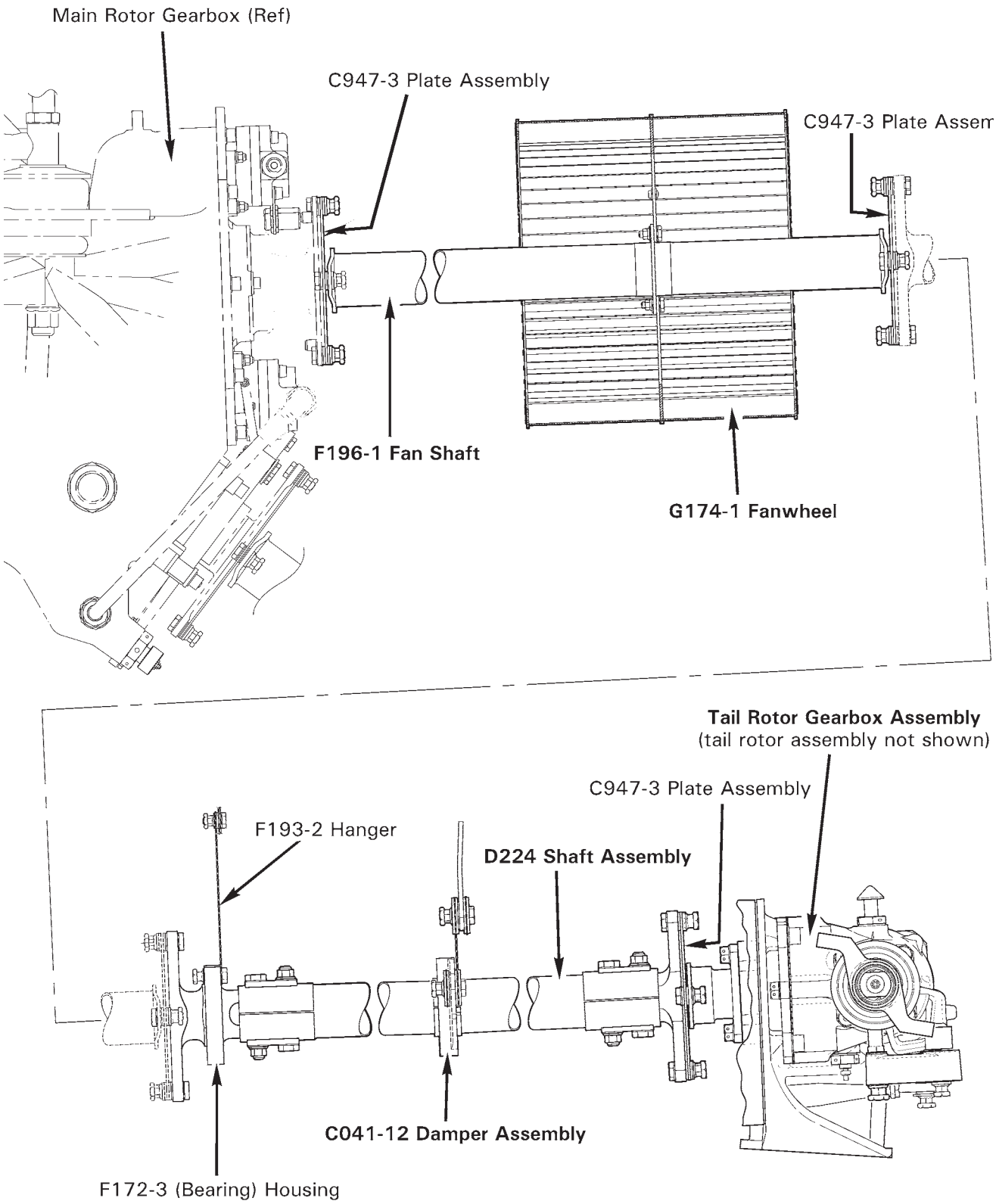

FIGURE 65-1 TAIL ROTOR DRIVELINE

65-20 Tail Rotor Drive Shaft Assembly

Refer to R66 Illustrated Parts Catalog (IPC) Figure 65-3.

A. Removal

1. Remove C023 tailcone assembly per Section 53-40.
2. Refer to Figure 65-1. Remove hardware securing F172-3 (bearing) housing to F193-2 hanger.
3. Refer to Figure 65-3. Using a 3-foot extension, remove bolts securing C041-12 damper assembly arm to D072-1 bulkhead assembly angle. Support forward end of D224 drive shaft assembly.
4. Remove hardware securing A558-2 cover to tailcone and remove cover.
5. Support aft end of drive shaft, and remove hardware securing drive shaft to aft C947-3 plate assembly, noting hardware removed. Carefully pull drive shaft forward through tailcone.

B. Installation

1. Refer to Figure 65-1. Route D224 drive shaft assembly through inside of tailcone. Support drive shaft as required.
2. Install hardware securing drive shaft to aft C947-3 plate assembly, as removed, and remove support. Standard torque fasteners per § 20-32 and torque stripe per Figure 5-1. Install A558-2 cover.
3. Refer to Figure 65-3. Remove forward A231 (tailcone) plug assembly. Estimate longitudinal gap (or interference) between C041-12 damper assembly arm and D072-1 bulkhead assembly angle. If gap (or interference) exceeds 0.12 inch, contact RHC Technical Support. If gap (or interference) is less than 0.12 inch, verify correct damper orientation. Using a 3-foot extension, install bolts securing damper to bulkhead angle. Standard torque bolts per § 20-32 and torque stripe per Figure 5-1. Install plug assembly.
4. Install hardware securing F172-3 (bearing) housing to F193-2 hanger, and remove support. Standard torque bolts per § 20-32 and torque stripe per Figure 5-1.
5. Install C023 tailcone assembly per § 53-40.

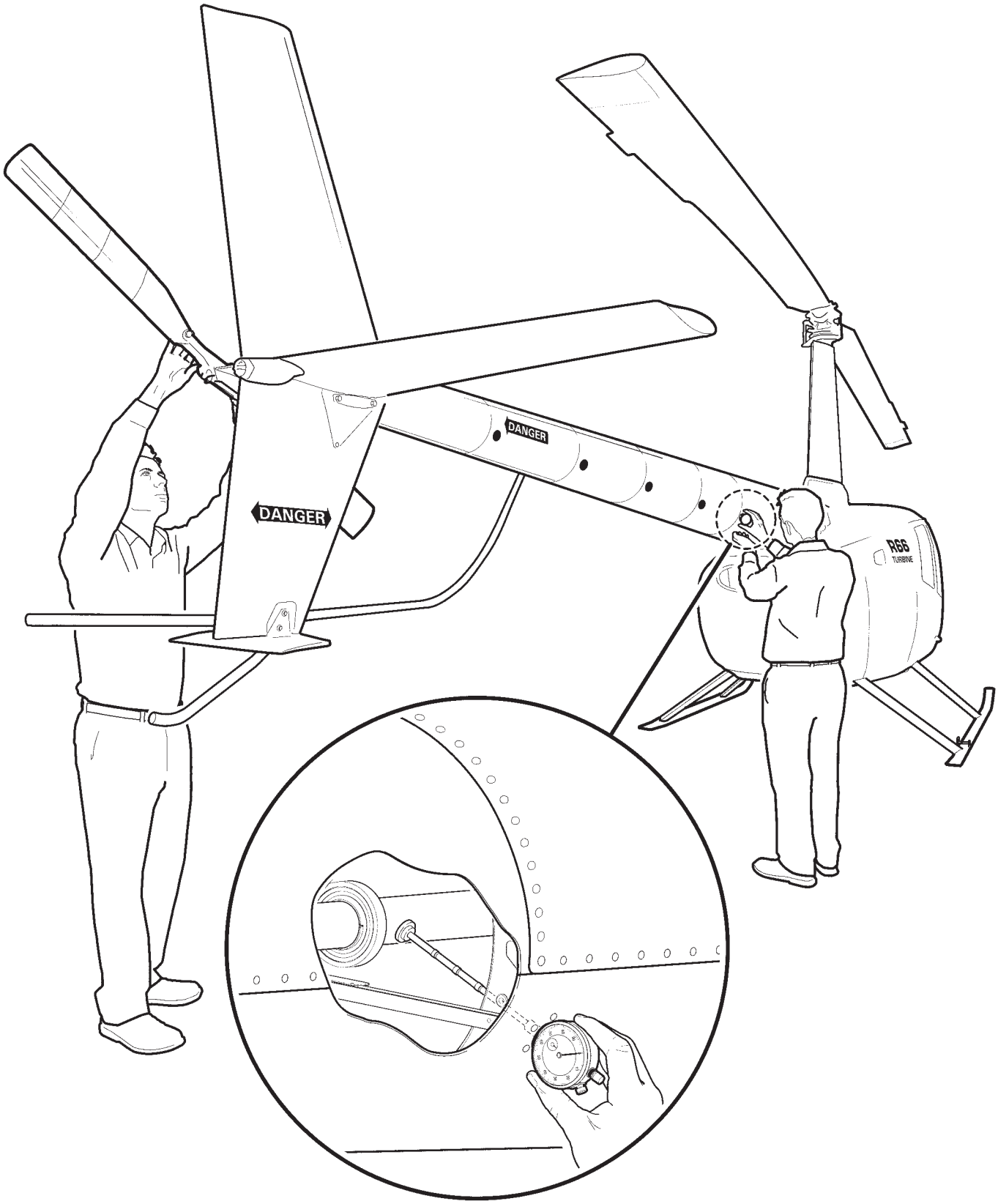

FIGURE 65-2 RUNOUT

65-21 Runout

1. Remove A231 (tailcone) plug assemblies.

2. Assemble MT260-6 tail rotor drive shaft runout tool and a calibrated dial indicator.

3. Refer to Figure 65-2. Using appropriate combination of extension(s), insert tool through tailcone inspection hole. Verify foot squarely contacts tail rotor drive shaft when pressing dial indicator firmly against inspection hole edges. Have a second person rotate rotor system by turning tail rotor hub.

4. Rotate rotor system slowly, smoothly, and for several revolutions until the technician is able to determine the average indicated movement. Maximum runout is 0.025 inch.

5. Repeat steps at each inspection hole. Record values as required (recommended during 100-hour or annual inspection).

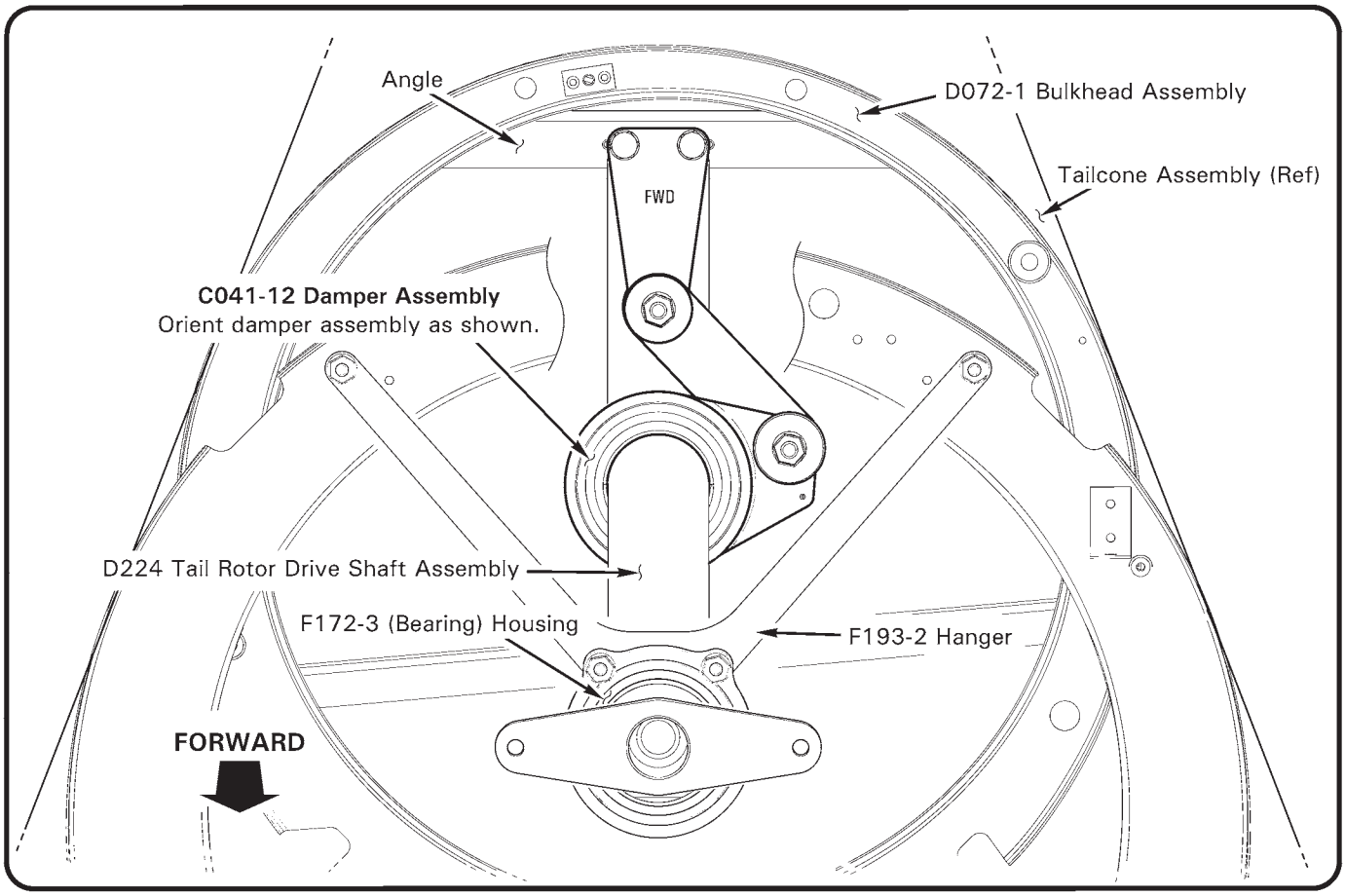

FIGURE 65-3 DAMPER ORIENTATION

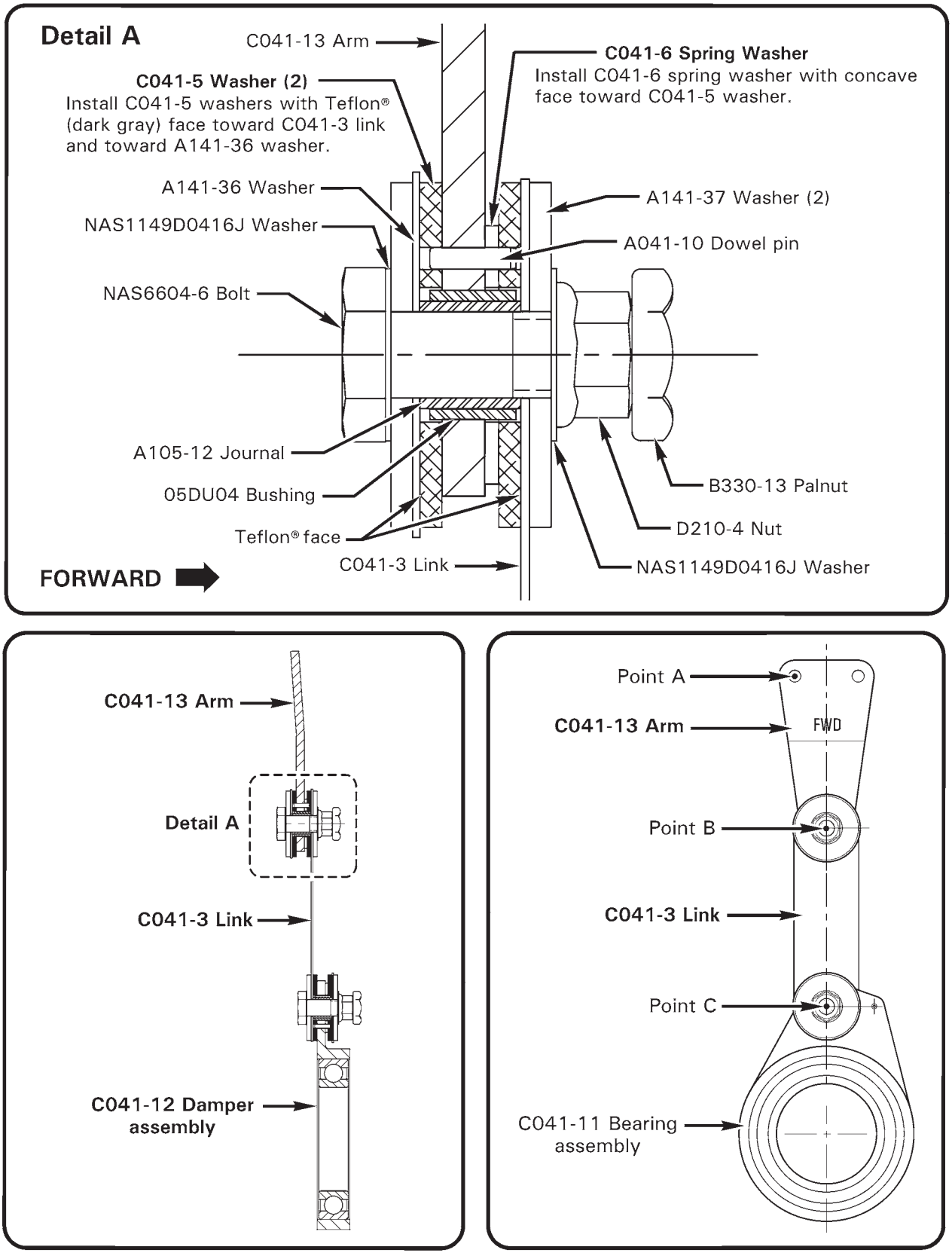

FIGURE 65-4 DAMPER ASSEMBLY

65-22 Damper Assembly

Refer to R66 Illustrated Parts Catalog (IPC) Figure 65-7.

A. Disassembly

1. Remove tail rotor drive shaft per § 65-20, if not previously accomplished.
2. Refer to Figure 65-4. Remove hardware securing C041-11 bearing assembly and C041-13 arm to C041-3 link.

B. Inspection and Assembly

1. Refer to Figure 65-4. Inspect condition of components. Verify no wear on Teflon® (dark gray) face of C041-5 washers. Verify no wear or grooves on A141-36 washers, A141-37 washers, and link. Replace components as required.

CAUTION

Install C041-5 washers with Teflon® face toward C041-3 link and toward A141-36 washer (remove protective coating, if installed).

CAUTION

Install C041-6 spring washer with concave face toward C041-5 washer.

2. Assemble damper. Install hardware securing C041-11 bearing assembly and C041-13 arm to C041-3 link. Align component holes on A041-10 dowel pin(s). Standard torque nuts and palnuts per § 20-32 and torque stripe per Figure 5-1.
3. Attach a calibrated spring scale to Point A. Holding link, verify force required to rotate arm about Point B is 3.5 - 5.8 lb. Adjust as required per Part C.
4. Attach a calibrated spring scale to Point B. Holding bearing assembly, verify force required to rotate link about point C is 2.1 - 3.6 lb. Adjust as required per Part C.

C. Friction Adjustment

CAUTION

Do not adjust damper drag by changing bolt torque.

1. Refer to Figure 65-4. If friction is less than required:
   a. Disassemble C041-12 damper assembly per Part A. Bend C041-6 spring washers to 0.065 - 0.078 inch total height; inspect and reassemble damper assembly per Part B.
   b. If friction is less than required after correcting spring washer height, disassemble damper assembly per Part A. Lap A105-12 journals, as required; inspect and reassemble damper assembly per Part B.
2. If friction is greater than required:
   a. Disassemble damper assembly per Part A. Flatten C041-6 spring washers slightly; inspect and reassemble damper assembly per Part B.
3. Install tail rotor drive shaft per § 65-20.

65-30 (Tail Rotor Driveline) Intermediate Flex Plate Shimming

> NOTE
>
> The tail rotor driveline is shimmed for minimal preload.

1. Refer to Figure 65-1. If not previously accomplished, remove hardware securing intermediate C947-3 flex plate assembly to F196-1 (tail rotor) fan shaft aft flange and D224 tail rotor drive shaft assembly forward yoke. Remove flex plate, and temporarily support aft portion of fan shaft.

2. Measure flex plate thickness at bonded washers (4 places) to determine average thickness:

   (1st place) _____ inch

   (2nd place) + _____ inch

   (3rd place) + _____ inch

   (4th place) + _____ inch

   Total = _____ inch

   Total ÷ 4 = _____ inch **(Flex plate average thickness)**

3. a. Position F196-1 fan shaft aft flange arms and D224 tail rotor drive shaft assembly forward yoke flange arms at 3 o'clock and 9 o'clock positions (horizontal). Measure gap between arms to determine average gap:

   (3 o'clock position) _____ inch

   (9 o'clock position) + _____ inch

   Total = _____ inch

   Total ÷ 2 = _____ inch **(Average gap between flange arms)**

   b. Rotate D224 tail rotor drive shaft assembly 180º, and repeat step a:

   (3 o'clock position) _____ inch

   (9 o'clock position) + _____ inch

   Total = _____ inch

   Total ÷ 2 = _____ inch **(Average gap between flange arms)**

4. Evaluate flange straightness by calculating the difference between the 3 o'clock positions in steps 3a and 3b. Also calculate the difference between the 9 o'clock positions in steps 3a and 3b. If either calculated difference exceeds 0.015 inch, either one or both flanges are bent and require replacement.

65-30 (Tail Rotor Driveline) Intermediate Flex Plate Shimming (continued)

5. Using the smaller average gap from step 3a or 3b, subtract the flex plate average thickness determined in step 2:

Smaller average gap between flange arms (step 3a or 3b) _____ inch

Subtract flex plate average thickness (step 2) – _____ inch

Total = _____ inch

6. Select shims per Table 65-1 and install intermediate C947-3 flex plate assembly. Standard torque nuts and palnuts per § 20-32 and torque stripe per Figure 5-1. Remove F196-1 (tail rotor) fan shaft temporary support.

WARNING

Shim both arms of flanges equally. All fasteners must meet torque requirements given in § 20-33.

Calculated Dimension	Shim required between intermediate C947-3 flex plate and F196-1 fan shaft aft flange	Shim required between intermediate C947-3 flex plate and D224 tail rotor drive shaft forward yoke
–0.017 or greater negative number	NAS1149F0432P washer between forward C947-3 flex plate assembly and F908-1 yoke assembly and/or F196-1 fan shaft forward flange may be relocated under nut as required to achieve –0.016 / +0.016 inch calculated dimension. Relocate washers as required, and repeat steps 3 thru 6.	
–0.016 / +0.016 in.	None	None
+0.017 / +0.047 in.	NAS1149F0432P washer	None
+0.048 / +0.079 in.	NAS1149F0432P washer	NAS1149F0432P washer
+0.080 / +0.110 in.	NAS1149F0463P washer	NAS1149F0432P washer
+0.111 / +0.141 in.	NAS1149F0463P washer	NAS1149F0463P washer
+0.142 or greater positive number	NAS1149F0432P washer between forward C947-3 flex plate assembly and F908-1 yoke assembly and/or F196-1 fan shaft forward flange may be exchanged with NAS1149F0463P washer as required to achieve –0.016 / +0.016 inch calculated dimension. Exchange washers as required, and repeat steps 3 thru 6.	

TABLE 65-1 TAIL ROTOR DRIVELINE

7. Measure fanwheel-to-inlet gaps per § 79-11.

65-40 Tail Rotor Gearbox Assembly

Refer to R66 Illustrated Parts Catalog (IPC) Figure 65-9.

A. Removal

> NOTE
>
> Drain tail rotor gearbox oil per § 12-21 prior to gearbox removal, or keep gearbox vertical after removal to avoid oil escape thru filler-vent plug.

1. Remove hardware securing push-pull tube assembly to bellcrank assembly.
2. As required, remove tail rotor assembly per § 64-10. As required, remove hardware securing bellcrank to tail rotor gearbox assembly output cartridge. Slide (assembled) bellcrank, pitch control assembly, and pitch links off of gearbox output shaft.
3. Remove hardware securing A558-2 cover to tailcone and remove cover.
4. Support aft end of D224 drive shaft assembly, and remove hardware securing gearbox input yoke to aft C947-3 plate assembly, noting hardware removed.
5. Cut and discard ty-raps as required and disconnect chip detector wiring at plastic connector.
6. Remove hardware securing gearbox to tailcone casting and remove gearbox.

B. Installation

1. Position tail rotor gearbox assembly on tailcone casting and install mounting hardware. Special torque screws per § 20-33 and torque stripe per Figure 5-1.
2. Connect chip detector wiring at plastic connector and install ty-raps, as required. Cinch ty-raps until snug without over-tightening, and trim tips flush with heads.
3. Install hardware securing gearbox input yoke to aft C947-3 plate assembly, and remove support. Shim tail rotor driveline per § 65-30. Standard torque bolts per § 20-32 and torque stripe per Figure 5-1. Install A558-2 cover.
4. If removed, slide (assembled) bellcrank assembly, pitch control assembly, and pitch links onto gearbox output shaft. Install hardware securing bellcrank to gearbox output cartridge. Standard torque bolts per § 20-32 and torque stripe per Figure 5-1. Shim pitch control per § 67-62, as required.
5. Install hardware securing push-pull tube assembly to bellcrank. Standard torque fastener per § 20-32 and torque stripe per Figure 5-1.
6. If removed, install tail rotor assembly per § 64-10.
7. Service tail rotor gearbox per § 12-21, as required.

65-41 Output Shaft Seal Replacement

Refer to R66 Illustrated Parts Catalog (IPC) Figure 65-13.

1. Remove tail rotor assembly per Section 64-10.
2. Remove hardware securing push-pull tube assembly to bellcrank assembly.
3. Remove hardware securing bellcrank to tail rotor gearbox assembly output cartridge. Slide (assembled) bellcrank, pitch control assembly, and pitch links off of gearbox output shaft.
4. Cut and discard safety wire securing C112-2 cap retaining hardware. Remove hardware securing cap to gearbox and remove cap with C966-2 seal and C215-133 o-ring.

CAUTION

Do not remove shims between cap and gearbox assembly. Shims control output shaft drag.

5. Using hydraulic press, press old seal from cap. Remove and discard o-ring. Clean and dry cap, especially seal seating surface and o-ring groove.
6. Verify open face of seal points toward gearbox and press new seal into cap bore 0.160 inches from external surface. Lightly coat new o-ring with A257-22 oil and install in cap.
7. Lightly coat output shaft seal seating area with A257-22 lubricant and slide cap onto shaft. Install hardware securing cap to gearbox and special torque bolts per Section 20-33. Install 0.032-inch diameter lockwire through hardware and safety in pairs.
8. Slide (assembled) bellcrank assembly, pitch control assembly, and pitch links onto gearbox output shaft. Shim pitch control per Section 67-62, as required.
9. Install hardware securing push-pull tube assembly to bellcrank. Standard torque fastener per Section 20-32 and torque stripe per Figure 5-1.
10. Install tail rotor assembly per Section 64-10.

65-42 Input Shaft Seal Replacement

Refer to R66 Illustrated Parts Catalog (IPC) Figure 65-13.

1. Remove tail rotor gearbox per Section 65-40. Tail rotor assembly and pitch control assembly removal are not required.

2. Remove and discard cotter pin securing tail rotor input yoke retaining nut. On a suitable work bench, place a wood block between yoke and gearbox housing to prevent tail rotor rotation; remove castellated nut, washer, and yoke.

3. Cut and discard safety wire securing C112-1 cap retaining hardware. Remove hardware securing cap to gearbox and remove cap with A966-3 seal and C215-140 o-ring.

CAUTION

Do not remove C141-2 washer between cap and bearing.

4. Using hydraulic press, press old seal from cap. Remove and discard o-ring. Clean and dry cap, especially seal seating surface and o-ring groove.

5. Verify open face of seal points toward gearbox and press new seal into cap bore 0.25 inch from external surface. Lightly coat new o-ring with A257-22 oil and install in cap.

6. Install cap, and hardware securing cap to gearbox; special torque bolts per Section 20-33. Install 0.032-inch diameter lockwire through hardware and safety in pairs.

7. Install input yoke, washer, and castellated nut onto gear shaft. Place wood block between yoke and gearbox housing to prevent tail rotor rotation, special torque nut per Section 20-33, and install new MS24665-210 cotter pin.

8. Install tail rotor gearbox per Section 65-40.

CHAPTER 67

FLIGHT CONTROLS

Section	Title	Page
67-00	Description	67.1
67-10	Cyclic Controls	67.1
67-11	Cyclic Control Assembly	67.1
67-12	Cyclic Grip Assembly	67.4
67-13	Cyclic Friction Assembly	67.6
67-20	Collective Control	67.6
67-21	Collective Stick Assembly	67.6
67-22	Collective Friction	67.8
67-30	Jackshaft and Strut Assembly	67.8
67-31	Jackshaft	67.8
67-40	Swashplate	67.9
67-41	Swashplate Tilting Friction Adjustment	67.11
67-42	Upper and Lower Scissor Assemblies	67.11
67-50	Tail Rotor Controls	67.13
67-51	Pedals	67.13
67-52	Pitch Control	67.14
67-60	Bellcranks	67.15
67-61	C317-5 or C317-9 Bellcrank	67.15
67-62	C317-7 Bellcrank	67.16
67-63	F316-1 Bellcrank	67.17
67-64	A331-4 Bellcrank	67.18
67-65	A120-5 Bellcrank	67.18

Intentionally Blank

CHAPTER 67

FLIGHT CONTROLS

67-00 Description

Dual controls, which are removable on the left side, are standard equipment. All primary controls are actuated through push-pull tubes and bellcranks. Bearings used throughout the control system are either sealed ball bearings or have self-lubricated Teflon® liners.

R66 flight controls operate conventionally. The cyclic stick appears different, but the grip moves the same as in other helicopters due to the free hinge at the center pivot. The cyclic grip is free to move vertically allowing the pilot to rest his forearm on his knee if he chooses.

The collective control is also conventional. A twist grip provides input to the engine fuel control, and raising or lowering the collective provides power turbine governor inputs via an interconnecting linkage.

Pilot-side tail rotor pedals are adjustable. To adjust, extract quick-release pin on each pedal by depressing button and pulling. Slide pedal fore or aft to most comfortable of three adjustment positions, and reinstall quick-release pin. Verify pins secure before flight.

See R66 Pilot's Operating Handbook (POH) Section 7 for instructions to remove (removable) flight controls.

See Section 67-50 for hydraulic system description.

WARNING

Assembly of flight controls is critical and requires inspection by a qualified person. If a second person is not available, the installer must take a 5-minute break prior to inspecting flight control connections he has assembled.

67-10 Cyclic Controls

Refer to R66 Illustrated Parts Catalog (IPC) Chapter 67.

67-11 Cyclic Control Assembly

A. Removal

1. Refer to Section 6-70. Remove F794-1 (forward) and F794-2 (aft) belly panels, F680-3 (pilot collective) and F445-1 (forward tunnel) cover assemblies, and F461-1 (collective cross tube) and F463-1 (aft tunnel) cover assemblies. Open upper console, disconnect OAT gage and hourmeter wiring connectors, and remove radio faceplate. Remove plastic hole plug from vertical keel panel beneath RH, aft seat.

2. Turn cyclic friction OFF. Gently punch out cyclic friction knob spring pin and remove knob. Remove hardware securing F444-1 cover assembly to F338-1 box, unsnap boot, and lift cover assembly to expose wire harness connectors. Disconnect anti-ice, pitot heat, and ELT switch (if installed) wiring. Snap boot together at top of cyclic stick to secure cover. Install pin on cyclic friction shaft to retain spacers.

3. Refer to Figure 67-1. Unhook D918-1 cord assembly from C069-8 (cyclic) stick assembly and D918-2 cord assembly from C177-5 pivot assembly.

4. Disconnect wiring exiting D320-8 stick at connectors near bottom of stick.

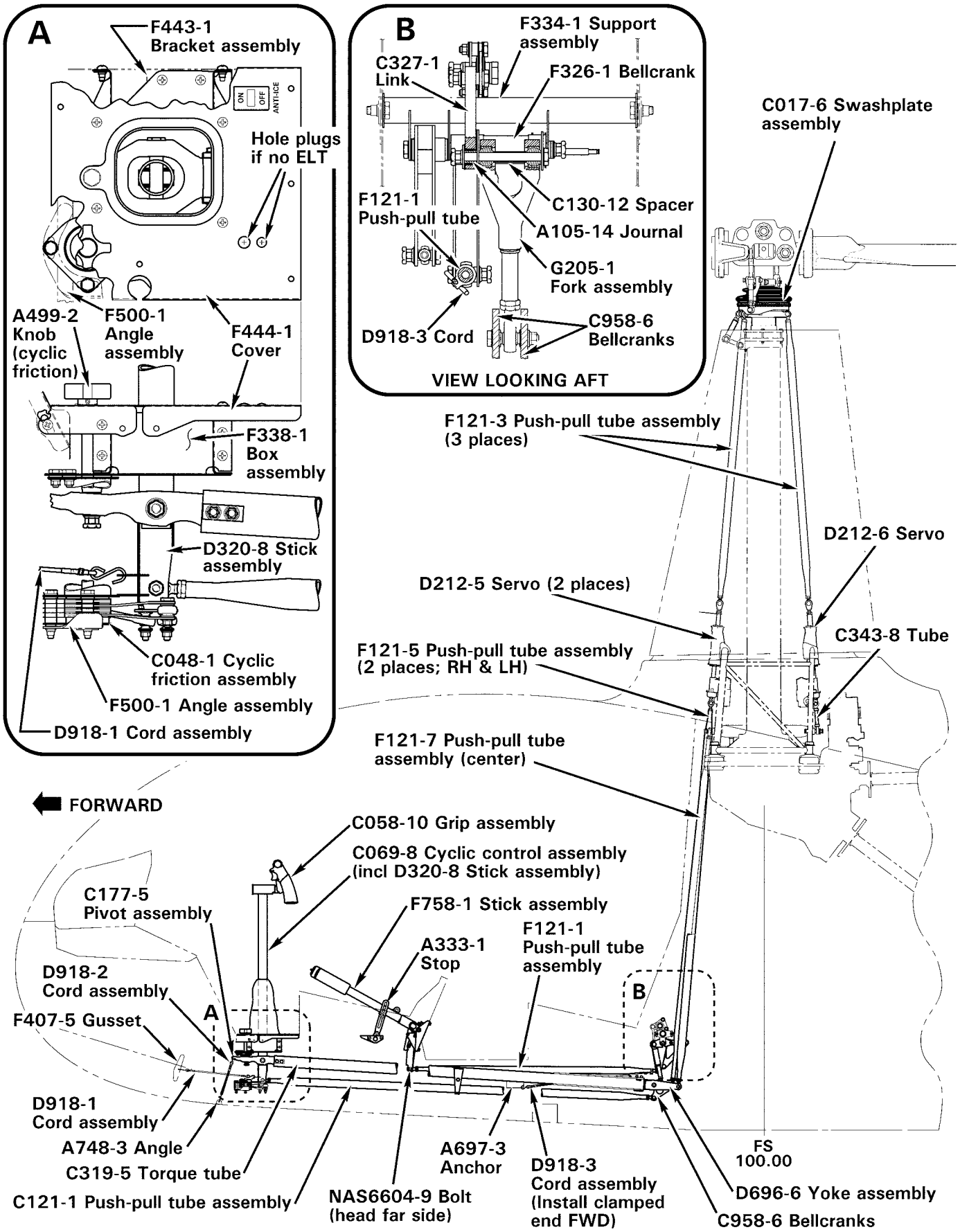

FIGURE 67-1 MAIN ROTOR FLIGHT CONTROLS

67-11 Cyclic Control Assembly (continued)

A. Removal (continued)

5. Remove hardware securing C121-1 push-pull tube assembly to D320-8 stick assembly. Remove hardware securing C319-5 torque tube assembly to C177-5 pivot assembly. Move push-pull tube and torque tube assemblies aft, and protect from scratching.

6. Disconnect, but do not remove, two bolts securing cyclic friction assembly to cabin. Apply some cyclic friction to keep plates assembled.

7. Remove screws securing F338-1 cyclic box to cabin. Lift and remove cyclic control assembly with attached cyclic box and friction assembly. Install nuts onto two cyclic friction assembly bolts, hand tight, to retain bolts and spacers.

8. Remove hardware securing both outboard, vertical F121-5 push-pull tube assemblies and C130-47 spacer to D696-6 yoke assembly.

9. Remove hardware securing center, vertical F121-7 push-pull tube assemblies to C958-6 bellcrank.

10. Remove hardware securing G205-1 fork assembly to F334-1 support assembly.

11. Pull D175-5 cyclic pivot assembly (torque tube, yoke, bellcranks, fork, and push-pull tube assembly) aft through belly.

B. Installation

1. Refer to Figure 67-1. Verify center-to-center distance between rod end and spherical bearings in G205-5 fork is 5.40 ± 0.03 inches; adjust as required. Standard torque jam nut and palnut per Section 20-32. Install C175-5 cyclic pivot assembly (torque tube, yoke, bellcranks, fork, and push-pull tube assemblies) thru aft belly.

2. Connect G205-1 fork assembly to F326-1 bellcrank and standard torque bolt per Section 20-32.

3. Connect lower end of center F121-7 push-pull tube to C958-6 bellcranks and standard torque bolt per Section 20-32.

4. Connect lower ends of both outboard F121-6 push-pull tubes to D696-6 yoke using a NAS6605-46 bolt and C130-47 spacer and standard torque per Section 20-32. Install plastic hole plug in vertical keel panel beneath RH, aft seat.

5. Remove temporary nuts from cyclic friction assembly bolts. Position cyclic box with attached cyclic control and friction assemblies between keel panels. Install all screws fastening cyclic box to cabin. Fasten cyclic friction assembly to cabin and standard torque bolts per Section 20-32.

6. Connect C319-5 torque tube assembly to C177-5 pivot and standard torque bolts per Section 20-32.

7. Connect forward end of C121-1 push-pull tube to D320-8 cyclic stick and standard torque bolts per Section 20-32.

67-11 Cyclic Control Assembly (continued)

B. Installation (continued)

8. Connect all electrical plugs at bottom of cyclic stick. Ensure protective sleeving covers maximum amount of wiring possible and sleeving ends are secured with lacing tape.

9. Connect D918-1 cord to D320-8 cyclic stick. Connect D918-2 cord to C177-5 pivot.

10. Move cyclic control through all positions and verify operating and no binding.

11. Install radio face plate, connect OAT gage and hourmeter wiring connectors, and ty-rap as required. Close and secure upper console.

12. Connect cyclic box cover anti-ice, pitot heat (if installed), and ELT (if installed) switch wiring connectors and secure cover.

13. Install cyclic friction knob and secure with spring pin. Close and secure cyclic stick boot.

14. Install F794-1 (forward) and F794-2 (aft) belly panels, F680-3 (pilot collective) and F445-1 (forward tunnel) cover assemblies, and F461-1 (collective cross tube) and F463-1 (aft tunnel) cover assemblies.

67-12 Cyclic Grip Assembly

A. Removal

NOTE

This may be accomplished without removal of complete cyclic assembly from rotorcraft.

1. Remove forward belly panel.

2. Refer to Figure 67-1. Disconnect wiring connectors attached to wiring exiting base of D320-8 cyclic stick. Using pin extractor, remove pins from housings (wires 112, 138, & 355 may remain installed) and retain housings. Remove lacing tape from both ends of protective sleeving covering wires exiting base of stick assembly. Attach a 3 foot length of safety wire or wire lacing tape to one removed pin.

3. As required, rotate grip assembly by pushing in on spring-loaded stop pin so exposed wire loom does not wrap around top of D320-8 cyclic stick. Remove circular plug, D684-1 spring, cotter pin, castellated nut, and washer where grip assembly attaches to D320-8 cyclic stick.

4. Remove grommet atop cyclic stick at grip assembly wiring entrance. With a soft-faced hammer, gently tap cyclic grip assembly pivot and remove grip assembly and attached wiring from stick assembly. Ensure safety wire or lacing attached to internal wiring protrudes from top and bottom of stick assembly. Also, ensure pivot bearings remain with stick assembly.

NOTE

Do not damage bearings while removing.

67-12 Cyclic Grip Assembly (continued)

B. Installation

1. Refer to Figure 67-1. Ensure protective sleeving covers wires exiting grip assembly with one grommet in grip and one (for cyclic stick) on wire bundle (spare grommets may be installed if desired).

2. Slide grip assembly into bearings in stick assembly. Install washer, castellated nut and cotter pin.

> **CAUTION**
>
> Tighten castellated nut only until there is no axial movement of bearings and cyclic grip assembly. Overtightening nut will damage bearings.

3. Install D684-1 spring so that when grip assembly is rotated one turn clockwise, with co-pilot grip removed, pilot grip (tube) will float just above horizontal and stay full-up when placed full-up. Install circular plug.

4. Temporarily attach grip assembly wiring to safety wire (or lacing) exiting atop cyclic stick. Carefully pull wires thru cyclic stick. Install grommet, included with grip assembly wiring, into cyclic stick wiring entrance hole. Remove safety wire (or lacing).

5. Position protective sleeving on wiring exiting cyclic stick bottom to cover maximum amount of wiring possible. Secure sleeving ends with lacing tape.

6. Install pins on each wire into proper position in housings. Refer to Figure 98-2 for pin positions.

7. Connect cyclic and airframe wiring and ty-rap. Move cyclic control through all positions and verify clearance and no binding.

8. Turn BATTERY switch on and verify correct function of all switches on grip assembly and cyclic stick.

9. Install forward belly panel.

67-13 Cyclic Friction Assembly

> NOTE
>
> The cyclic friction assembly is located below the forward left corner of the cyclic box. Turning friction knob clockwise applies friction to both longitudinal and lateral cyclic axes. Adjustment is required if friction cannot be applied.

A. Friction Adjustment

1. Turn friction knob counter-clockwise until it stops.
2. Remove roll pin connecting knob to shaft.
3. Lift knob off shaft.
4. Install NAS1149F0432P or NAS1149F0463P washers under knob washer, as required, so knob rotates 1/8 to 1 turn before adding friction. With friction off, force at grip to move cyclic shall not exceed 1.75 pounds longitudinal and lateral within hydraulic servo deadbands.
5. Replace knob and install roll pin.
6. Move flight controls throughout complete travel. Verify no binding.

67-20 Collective Control

67-21 Collective Stick Assembly

A. Removal

1. Refer to Figure 67-1. Disconnect A333-1 collective-travel stop from F348-1 anchor by removing NAS6603 bolt at bottom of stop. Position stop parallel to collective stick and apply collective friction.
2. Refer to Figure 6-8. Remove F445-1 forward tunnel cover, F680-3 pilot's collective cover, F680-1 co-pilot's collective cover, F463-1 mid-tunnel cover, and F461-1 collective cross tube cover.
3. Pivot pilot's seat bottom to the open position. Remove bolt securing inboard end of collective stick to pilot's seat structure. Refer to Figure 76-1. Disconnect throttle control inner wire from A462-4 fitting at outboard end of collective. Remove three screws securing C522-10 throttle control to collective cross tube.
4. Disconnect wiring exiting aft end of center collective stick from airframe harness connector. Remove ty-raps as required.
5. Disconnect forward end of F121-1 push-pull tube from collective stick assembly.
6. Remove bolt securing outboard end of collective stick to F303-1 support. Remove two remaining screws securing F303-1 support to cabin. Slide support, with attached micro-switches, down to allow aft movement of collective stick.
7. Pivot pilot's seat bottom to the open position. Remove bolt securing collective stick assembly to pilot's seat structure.
8. Carefully move collective stick assembly aft and remove from helicopter.

67-21 Collective Stick Assembly (continued)

B. Installation

1. Refer to Figure 67-1. Position A333-1 collective-travel stop parallel to collective stick and apply collective friction. From aft side of co-pilot's seat, carefully position collective stick assembly in helicopter.
2. Pivot pilot's seat bottom to the open position. Install bolt from inside pilot's seat structure thru bearing block into tunnel and secure to inboard end of collective stick assembly. Standard torque bolt, install palnut, and torque stripe per Figure 5-1.
3. At outboard end of collective stick, slide F303-1 support, and attached micro-switches, up behind collective cross tube and secure support to cabin with two screws.
4. Install journal in outboard pivot bearing of collective stick assembly. Position journal & bearing between flanges of F303-1 support and insert NAS6604 bolt. Standard torque bolt per § 20-32, install palnut, and torque stripe per Figure 5-1.
5. Connect forward end of F121-1 push-pull tube to collective stick assembly with NAS6604 bolt head on outboard (right) side (nut side inboard). Standard torque bolt per § 20-32, install palnut, and torque stripe per Figure 5-1.
6. Refer to Figure 6-8. Slide F680-3 collective cover over center collective stick aft of friction assembly.
7. Insert A130-4 spacer into lower end of A333-1 collective-travel stop. Position spacer and stop in F348-1 anchor. Install NAS1149F0432P and 0463P washers on spacer on either side of stop as required to obtain 0.001/0.035 inch axial play and align stop with collective. Secure stop to anchor with NAS6603 bolt, standard torque per § 20-32, install palnut, and torque stripe per Figure 5-1. Move collective up & down and verify no binding of stop.

CAUTION

NAS6604-9 bolt connecting forward end of F121-1 push-pull tube to collective must be installed so bolt head is toward right side of helicopter. Refer to Figure 67-1.

8. Connect wiring exiting center collective stick to airframe wire harness connector. Secure connector to airframe harness with Ty-raps as required. Move collective up & down and verify wiring clearance with no strain.
9. Refer to Figure 76-1. Secure C522-10 throttle control to collective cross tube with three clamps and screws. Position control inner wire in A462-4 fitting and rig per § 76-11.
10. Refer to Figure 6-8. Install and secure F445-1 forward tunnel cover, F680-3 pilot's collective cover, F680-1 co-pilot's collective cover, F463-1 mid-tunnel cover, and F461-1 collective cross tube cover.
11. Adjust collective friction per § 67-22.

67-22 Collective Friction

Adjust friction on F334-1 to produce a force within servo dead bands of 4–5 lb when pulling up at collective grip with friction on collective full off, then adjust friction on collective as required to produce a force of 18-22 lb when pulling up at grip when full on.

67-30 Jackshaft and Strut Assembly

67-31 Jackshaft

A. Removal

> NOTE
>
> Rigging check is not necessary if jackshaft support rod end and push-pull tube lengths are not altered.

1. Disconnect push-pull tubes from F339-1 jackshaft.
2. Disconnect two bolts connecting jackshaft to G201-1 frame.
3. Remove jackshaft.

B. Installation

1. Ensure A105-6 journal is installed in jackshaft aft support on G201-1 frame. Position F339-1 jackshaft on G201-1 frame and install bolts. Standard torque bolts per § 20-32, install palnuts, and torque stripe per Figure 5-1.
2. Insert bolt forward thru forward jackshaft arm and connect to upper end of F121-7 push-pull tube. Install A115-1 spacer, A214-3 washer and nut. Standard torque bolt per § 20-32, install palnut, and torque stripe per Figure 5-1.
3. Insert bolt aft thru aft jackshaft arm and connect to lower rod end on C343-8 tube. Install A115-1 spacer, A214-3 washer and nut. Standard torque bolt per § 20-32, install palnut, and torque stripe per Figure 5-1.
4. Verify no binding and/no interference with control system exists throughout flight control travel.

67-40 Swashplate

A. Removal

> NOTE
>
> Rigging check is not required if push-pull tube rod end center-to-center dimension does not change.

1. Remove main rotor blades and hub per §§ 62-10 and 62-20.
2. Atop of C251 main rotor drive shaft, remove D226 brackets, D151 teeter stops, and C150 droop stops by removing NAS6608 bolt.
3. Disconnect upper C204 arm from C203 yokes.
4. Disconnect and remove C203 yokes, A210 key, and chord arm weights.
5. Remove swashplate boot by cutting plastic ty-raps.
6. Disconnect three push-pull tubes and A205 fork assembly from lower (non-rotating) swashplate.
7. Lift swashplate with attached fork and pitch links off slider tube and remove from helicopter.

B. Installation

1. Install swashplate onto slider tube assembly. Connect lower scissors' fork to left side of middle of three lugs on lower, non-rotating swashplate. Connect aft push-pull tube to right side of aft, single lug on lower swashplate. Standard torque bolts per § 20-32. Install palnuts and standard torque per § 20-32.
2. Verify swashplate tilting friction per § 67-41; adjust as required.
3. Slide swashplate boot over main rotor drive shaft and set in place.
4. Install C203 yokes on C251 main rotor drive shaft upper flange using A210 key to index yokes to shaft. Finger tighten clamping hardware.

> NOTE
>
> Round edge of A210 key to fit into drive shaft flange indexing slot.

5. Standard torque NAS6605 bolt thru yokes and A210 key first per § 20-32. Install palnuts and standard torque per § 20-32.
6. Standard torque bolt thru yokes opposite A210 key per 20-32. A slight gap between yokes opposite A210 key is normal.
7. Install previously removed chord arm weights and standard torque bolt per § 20-32. Install palnut, standard torque per §20-32, and torque stripe per Figure 5-1.

67-40 Swashplate (continued)

B. Installation (continued)

8. If required, fill remainder of rod end threaded hole in upper A205 fork with B270-4 or −13 sealant (see § 20-70).

9. With bolt heads in direction of rotation, connect upper A205 fork to upper C204 arm and connect arm to C203 yokes. Standard torque bolts per § 20-32. Verify 0.001/0.005 inch axial play in both pivots; adjust C117 shim thickness between nut-side journal & thrust washer as required. Verify bolt, arm, and clamped hardware in upper scissor's pivots rotate together. Install palnuts, standard torque per § 20-32, and torque stripe per Figure 5-1.

10. Verify bolt, arm, and clamped hardware in lower scissor's pivots rotate together. Connect forward push-pull tube rod ends to remaining lower lugs on swashplate and standard torque bolts per § 20-32. Install palnut, standard torque per § 20-32, and torque stripe per Figure 5-1.

11. Connect upper A205 fork rod end and lower rod end of C258 pitch link to interrupter-side swashplate ear and standard torque bolt per § 20-32. Install palnut, standard torque per § 20-32, and torque stripe per Figure 5-1.

12. Position swashplate boot on rotating swashplate with inner lip contacting C203 yoke. Secure with ty-raps.

13. Attach two A255-3 counterweights and lower rod end of C258 pitch link to swashplate ear opposite interrupter and standard torque bolt per § 20-32. Install palnut, standard torque per § 20-32, and torque stripe per Figure 5-1.

14. Install main rotor hub and blades per §§ 62-10 and 62-20.

15. Verify safety washers (or counterweight) and C115 spacers installed on all rod ends per Figure 5-1. Torque stripe fasteners per Figure 5-1.

16. Verify no interference with control movement throughout flight control travel and swashplate movement corresponds with cyclic and collective movement.

17. Track and balance main rotor per § 18-10.

67-41 Swashplate Tilting Friction Adjustment

Swashplate tilting friction is established by C197-1 through C197-6 shims controlling clamping force of Teflon®-lined sleeves on the ball assembly.

1. Mark for reassembly and disconnect boot, pitch links and drive linkage (scissors) from upper swashplate and both forward push-pull tubes from lower swashplate.

2. Align upper swashplate arms with lateral axis of helicopter and center cyclic stick. Using MT359-1 spring scale (or equivalent) connected to upper swashplate arm bolt hole, pull down and note scale reading while swashplate is moving; do not use breakaway reading. Force required to tilt swashplate must be free-without-looseness minimum to 5 pounds maximum.

3. To adjust friction, remove outer screws from upper swashplate and raise and secure retainers to allow access to inner screws on lower, non-rotating swashplate. Remove inner screws securing sleeve to lower swashplate.

4. Raise sleeve and measure thickness of C197 shim stack. Adjust shim stack thickness as required to achieve proper tilting friction. Decreasing shim stack thickness increases tilting friction while increasing spacer stack thickness decreases tilting friction. Install, and special torque per § 20-33, all inner screws on lower swashplate and at least two screws thru retainers in upper swashplate prior to measuring tilting friction.

5. Connect both forward push-pull tubes to lower swashplate and standard torque per § 20-32. Install palnut, special torque per § 20-33, and torque stripe per Figure 5-1.

6. Connect both pitch links and drive linkage to upper swashplate (interrupter on same side as drive linkage) and standard torque per § 20-32. Install palnuts, special torque per § 20-33, and torque stripe per Figure 5-1.

67-42 Upper and Lower Scissor Assemblies

A. Bearing Removal

C648-2 journal bearings may be removed with a press. Press from inner side of bearings while supporting outboard side of yoke or fork. Use a socket or other suitable pressing tool to apply the force.

B. Bearing Installation

1. Clean mating surfaces of A205 fork or C203 yoke where C648 bearing is installed. Deburr any sharp edges that may damage bearings during installation.

2. Coat yoke or fork bearing bores with zinc chromate or epoxy primer. While primer is still wet, press in C648-2 bearing while supporting backside of fork or yoke.

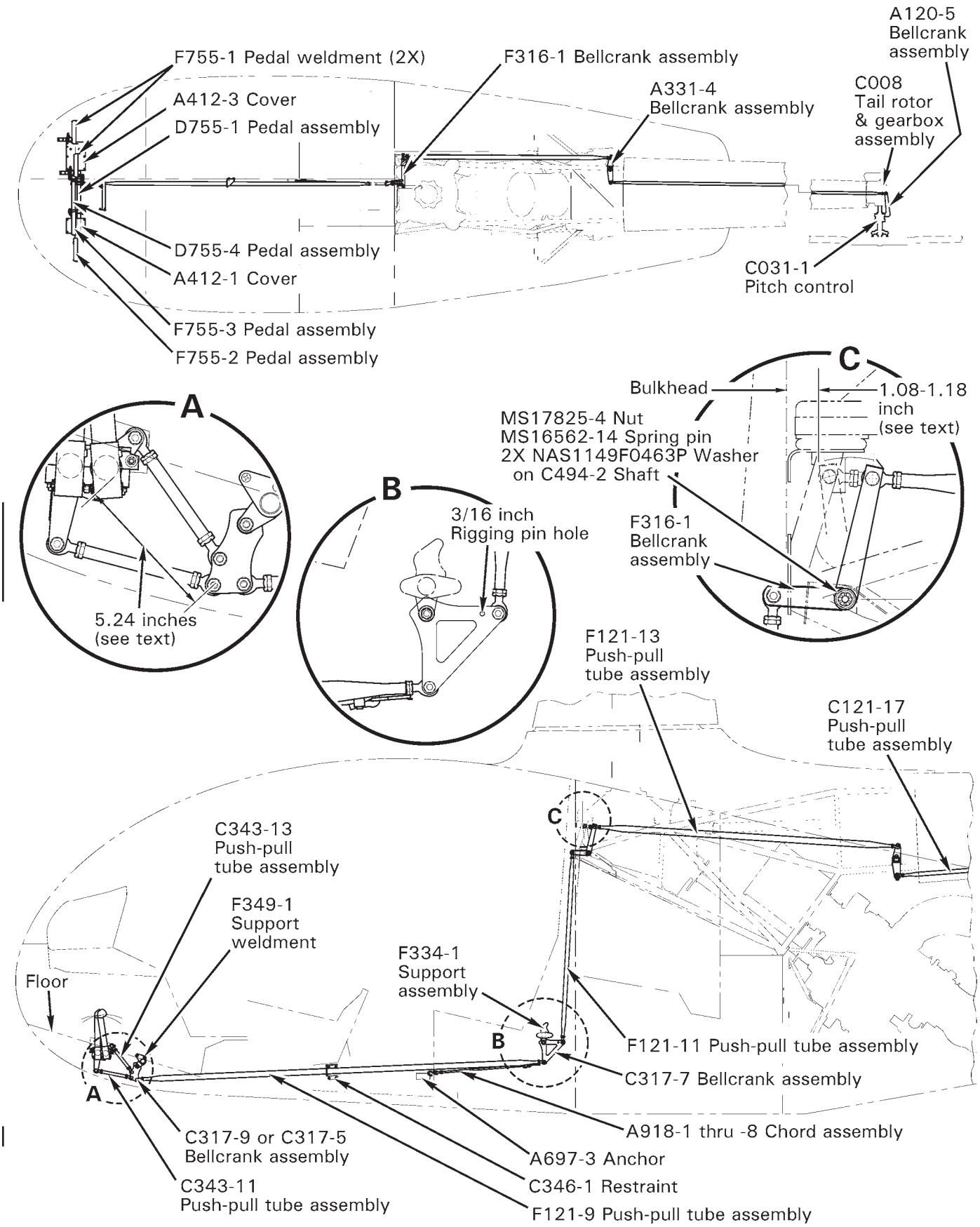

FIGURE 67-3 TAIL ROTOR FLIGHT CONTROLS

67-50 Tail Rotor Controls

Refer to R66 Illustrated Parts Catalog (IPC) Figures 67-29 thru 67-39.

67-51 Pedals

A. Removal

1. Peel back carpet as required to access pedal covers per § 25-30 Part D.
2. Remove screws securing pedal covers to cabin floor and remove covers.
3. Remove screws securing upper console to side panels; pivot console up and aft.

> **CAUTION**
>
> Do not change the length of or remove rod ends from C343-11 and -13 push-pull tube assemblies.

4. Remove hardware securing D755 pedal assemblies to C343-11 and -13 push-pull tube assemblies.

> NOTE
>
> Pedal bearing blocks (upper and lower) are a machined, matched set as indicated by matching letter or number on the upper and lower portion of blocks. DO NOT mix them or alignment problems may develop on installation.

5. Remove bolts securing A318-1 and -2 bearing block halves together and remove lower bearing blocks.
7. Remove pedal assemblies one at a time by lifting one end and lowering other into chin. Remove pedals thru pilot-side opening.

> NOTE
>
> On reassembly, the right pedal assembly is mounted forward in the bearing blocks and the left is mounted aft.

B. Installation

1. Fill the grooves in the pedal bearing blocks with A257-1 grease.
2. Install the pedal assemblies into the bearing blocks and torque bearing block attach bolts per § 20-32.

> NOTE
>
> If a force greater than 5 lbs is required to move pedals, check the bearing blocks to ensure they are matched correctly.

67-51 Pedals (continued)

B. Installation (continued)

3. Connect both pedal assemblies to the push-pull tubes and torque the NAS6604-9 bolts to per § 20-32 and install palnuts.

4. Move the pedals through the full range of travel to ensure there is no interference or binding.

5. Secure console. Install the pedal covers and carpeting. Use B270-7 or -8 adhesive to attach carpeting.

67-52 Pitch Control

A. Removal

1. Remove tail rotor assembly per § 64-11. Mark corresponding tail rotor blade grips, tail rotor pitch change to each of the pitch control ears, for later reinstallation so re-rigging is not required.

2. Disconnect and remove A120-5 aft bellcrank per § 67-75.

3. Remove C031-1 pitch control from tail rotor output shaft. Clean output shaft.

B. Installation

1. Verify inner bore of C031-1 pitch control is clean. Slide pitch control assembly onto clean output shaft.

2. With pitch control's input stud thru short arm of A120-5 bellcrank assembly, position bellcrank on tail rotor gearbox and install NAS6604-25 bolt, one AN960-416L washer under bolt head, two MS20002-4 washers, one on each side of bearing and MS21042-L4 nut. Tighten but don't torque at this time.

3. Measure vertical gap between A120-5 bellcrank arm and flange on pitch control stud. Install sufficient C117-34, - 35 and -36 washers between bellcrank and stud to fill gap within ± 0.003 inch. Install one NAS1149F0432P washer and MS21042-L5 nut on protruding end of stud. Torque nut to 200 in.-lb plus nut drag while holding stud from rotating. Install palnut and special torque per § 20-33.

4. Standard torque bolt thru A120-5 bellcrank pivot per § 20-32 and install palnut and special torque per § 20-33.

5. Attach aft end of C121-17 push-pull tube to A120-5 bellcrank and standard torque bolt per § 20-32.

6. Install hardware securing pitch links, standard torque bolts and palnuts per § 20-32, and torque stripe per Figure 5-1.

7. Install tail rotor assembly per § 64-10.

67-60 Bellcranks

Refer to R66 Illustrated Parts Catalog (IPC) Figure 67-37.

67-61 C317-5 or C317-9 Bellcrank

A. Removal

1. Remove screws securing upper console to side panels; pivot console up and aft.
2. Remove installed avionics located in center console per Chapter 97. Remove hardware securing face plate and avionics trays to side panels and remove plate and trays.

> **CAUTION**
>
> Do not change the length of or remove rod ends from C343-11 and -13 push-pull tube assemblies.

3. Remove hardware securing C343-11 and C343-13 push-pull tube assemblies and F121-9 push-pull tube assembly to C317-5 or C317-9 bellcrank assembly.
4. Remove hardware securing F349-1 support assembly to side panels and remove support with attached bellcrank.
5. Remove hardware securing bellcrank to support and remove bellcrank (carefully remove journals from bellcrank bearing).

B. Installation

1. Insert journals inside C317-5 or C317-9 bellcrank assembly's bearing. Align washers and bellcrank with F349-1 support assembly flange holes and install hardware. Standard torque nut and palnut per § 20-32 and torque stripe per Figure 5-1.
2. Position support with attached bellcrank in helicopter and install hardware securing support to side panels. Verify security.
3. Verify C343-11 push-pull tube's rod end center-to-center dimension is 5.82 ± 0.03 inches and C343-13 push-pull tube's rod end center-to-center dimension is 5.30 ± 0.03 inches. Install hardware securing push-pull tubes to bellcrank. Standard torque nuts and palnuts per § 20-32 and torque stripe per Figure 5-1.
4. Install hardware securing F121-9 push-pull tube assembly to bellcrank. Standard torque nut and palnut per § 20-32 and torque stripe per § 20-33.
5. Perform tail rotor flight control rigging per § 18-50.
6. Actuate pedals through full control travel and verify smooth operation without binding.
7. Pivot upper console forward and down. Position avionics tray and face plate in helicopter and install hardware securing trays and plate to side panels. Verify security.
8. Install avionics in center console per Chapter 97. Install screws securing console to side panels and verify console security.

67-62 C317-7 Bellcrank

A. Removal

1. Refer to § 6-70. Remove F794-2 aft belly cover, F932-1 middle seat backrest assembly, and F474-2 middle seat cover.

2. Disconnect F121-9 and F121-11 push-pull tubes from the C317-7 bellcrank.

3. Remove nuts and accompanying washers securing NAS6604-67 bolt in F334-1 support assembly. Withdraw bolt sufficient to remove C317-7 bellcrank and remove bellcrank, two A141-3 washers, and two A105-3 journals.

B. Installation

1. Install two A105-3 journals in C317-7 bellcrank's pivot bearing bore. With 3/16 inch rigging pin hole aft and an A141-3 washer against outboard face of each journal, install bellcrank on F334-1 support assembly and retain with NAS6604-67 bolt.

2. Install two NAS1149F0463P and one NAS1149F0432P washer followed by MS21042L4 nut on NAS6604-67 bolt. Standard torque bolt per § 20-32. Install palnut, special torque per § 20-33, and torque stripe per Figure 5-1.

3. Connect F121-9 push-pull tube assembly to C317-7 bellcrank and standard torque bolt per § 20-32. Install palnut, special torque per § 20-33, and torque stripe per Figure 5-1.

4. Move pedals full travel. Verify smooth movement and no interference.

5. Install F794-2 aft belly cover, F932-1 middle seat backrest assembly, and F474-2 middle seat cover.

67-63 F316-1 Bellcrank

A. Removal

1. Remove main rotor gearbox per § 63-20.
2. Disconnect F121-11 push-pull tube from F316-1 bellcrank assembly.
3. Disconnect F121-13 push-pull tube from F316-1 bellcrank assembly.
4. Remove nuts and spacer from outboard end of C494-2 shaft. Move shaft slightly inboard and remove washer from between frame tab and bellcrank.
5. Remove spring pin, castellated nut, and washers from inboard end of C494-2 shaft. Move shaft slightly outboard and remove washer from between bellcrank and inboard support.
6. Remove bellcrank.

B. Installation

1. Install one A141-3 washer on C494-2 shaft adjacent to both inboard and outboard end of F316-1 bellcrank.
2. Install bellcrank with washers in helicopter with longer arm pointing up.
3. On inboard end of C494-2 shaft, install two NAS1149F0463P washers followed by MS17825-4 castellated nut. Tighten nut until it aligns with hole in shaft and install new MS16562-14 spring pin.
4. On outboard end of shaft install C130-34 spacer and MS21042L4 nut. Special torque nut to 90 in.-lb. Install palnut and special torque per § 20-33. Torque stripe inboard and outboard nuts per Figure 5-1.
5. Connect F121-13 push-pull tube to bellcrank and standard torque bolt per § 20-32. Install palnut, special torque per § 20-33, and torque stripe per Figure 5-1.
6. Connect F121-11 push-pull tube to bellcrank and standard torque bolt per § 20-32. Install palnut, special torque per § 20-33, and torque stripe per Figure 5-1.
7. Move pedal full travel. Verify smooth movement and no interference.
8. Install main rotor gearbox per § 63-20.

67-64 A331-4 Bellcrank

A. Removal

1. Disconnect F121-13 and C121-17 push-pull tubes from A331-4 bellcrank.

2. Disconnect NAS6604-35 attach bolt and remove bellcrank and two A105-3 journals.

B. Installation

1. Install two A105-3 journals in C331-4 bellcrank's pivot bearings. Install an NAS1149F0432P washer under head of an NAS6604-35 bolt followed by an A141-3 washer and insert bolt thru journals. Install an A141-3 washer on bolt against journal face, followed by an NAS1149F0432P washer.

2. Install bellcrank, with straight side aft, on F020-1 frame's boss, and secure to frame with an NAS1149F0432P washer and MS21042L4 nut. Standard torque bolt per § 20-32. Install palnut, special torque per § 20-33, and torque stripe per Figure 5-1.

67-65 A120-5 Bellcrank

A. Removal

1. Remove hardware securing C121-17 push-pull tube assembly to A120-5 bellcrank assembly.

2. Disconnect bellcrank pivot from C021-1 tail rotor gearbox.

3. Remove nut holding bellcrank to the pitch control. Remove bellcrank and reinstall nut, and shims found between bellcrank and pitch control.

B. Installation

1. Install pitch control per § 67-62.

CHAPTER 71

POWERPLANT

Section	Title	Page
71-00	Description	71.1
71-10	Engine	71.3
71-11	Preparing Engine for Rolls-Royce Maintenance Facility	71.6
71-12	Preparing Engine for Helicopter Installation	71.7
71-20	Induction	71.11
71-21	Air Filter Assembly	71.11
71-22	Cage Assembly	71.16
71-23	Engine Inlet Bellmouth	71.16
71-30	Exhaust Weldment	71.19
71-40	Accessories	71.20
71-41	Starter-Generator	71.20
71-42	Generator Control Unit (GCU)	71.20
71-43	Engine Monitoring Unit (EMU)	71.21

Intentionally Blank

CHAPTER 71

POWERPLANT

71-00 Description

One Rolls-Royce model 250-C300/A1 (commercial designation RR300) free-turbine turboshaft engine powers the helicopter. The engine is equipped with an ignition exciter, igniter, starter-generator, two tachometer senders, and additional powerplant instrument senders.

A direct drive, squirrel cage style cooling fan is mounted to the intermediate shaft and supplies cooling air to the engine and gearbox oil coolers.

Induction air enters through multiple openings in the upper fuselage cowlings and flows into a plenum forward of the firewall. The plenum contains a radial-flow air filter at the engine compressor inlet.

If the air filter becomes blocked, spring-loaded doors at the front of the filter housing open allowing unfiltered air to the engine. The AIR FILTER annunciator illuminates when filter bypass is occurring.

Periodically performing power assurance checks may provide indication of engine deterioration or air filter blockage. Maintenance actions such as air filter cleaning and compressor wash should be performed if aircraft fails power assurance check.

A temperature switch is mounted to the firewall above the engine to detect a fire in the engine compartment. Abnormally high temperature causes the ENGINE FIRE annunciator to illuminate.

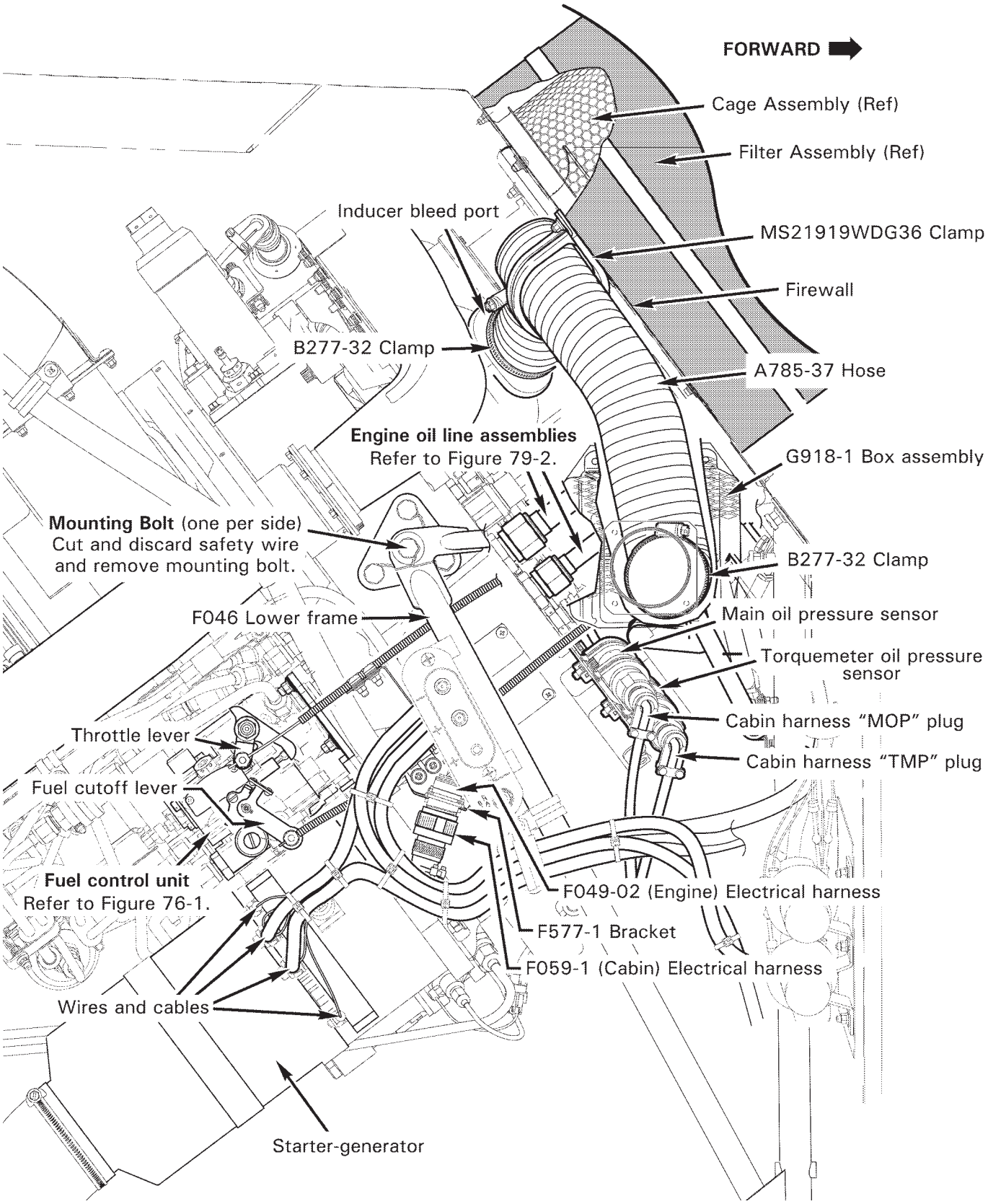

FIGURE 71-1 ENGINE - RIGHT SIDE

71-10 Engine

Refer to R66 Illustrated Parts Catalog (IPC) Chapter 71.

NOTE

The electronic monitoring unit (EMU) is a serialized component assigned to the engine. When removing the engine, remove the engine's EMU per Section 71-43, as required.

A. Removal

1. Remove engine cowling assembly per Section 53-21.
2. Refer to Figures 71-1 and 71-2. Verify heat shrink stamping is legible (or mark wires and cables) and remove hardware securing wires and cables to starter-generator studs. Disconnect F059-01 (cabin) electrical harness from F049-02 (engine) harness at F577-1 bracket assembly. Disconnect cabin harness "TMP" (torquemeter oil pressure) and "MOP" (main oil pressure) plugs from engine sensors; disconnect cabin harness plug from N2 speed sensor.
3. Pull fuel shut off valve OFF. Disconnect B283-12 (fuel) hose assembly B-nut from engine fuel inlet fitting. Cap fitting and plug line.
4. Remove hardware securing MS21919WDG36 clamp to firewall, and loosen B277-32 clamps securing A785-37 hose to inducer bleed port and G918-1 box assembly. Remove hose and clamps. Install cover on inducer bleed port and tape box assembly to protect openings from contaminants.
5. Remove hardware securing G391-1 (customer air) line assembly clamps. Loosen line assembly B-nut from G391-5 line assembly union and disconnect B-nut from engine compressor union. Cap fitting and plug line.
6. Drain engine oil per Section 12-60; drain engine oil per RR300 Operation and Maintenance Manual (OMM). Refer to Figure 79-2. Remove hardware securing F723 oil line assembly clamps. Loosen F723-1, F723-2, and F723-3 line assembly B-nuts from F649-1 oil cooler and G689-1 oil tank assembly unions; disconnect B-nuts from engine fittings. Cap fittings and plug lines.
7. Refer to Figure 63-1. Remove hardware securing F018-1 clutch assembly yoke to (aft) A947-2 plate assembly, noting hardware removed.
8. Refer to Figure 76-1. Remove fasteners securing C522-10 (throttle) and A522-10 (fuel cutoff) control inner wires to FCU throttle and fuel cutoff levers. Remove fasteners securing control housings and AN742-4 clamps to F577 bracket assemblies. Refer to Figure 76-2. Remove cotter pin and washer securing C522-11 (power turbine governor) control inner sleeve and D333-13 fitting to PTG input lever; disconnect control from lever.
9. Remove exhaust per Section 71-30.
10. Connect engine hoist to G200-1 engine lifting lug. Support engine during mounting hardware removal.
11. Cut and discard safety wire and remove two bolts securing bottom engine mount to F174-1 support weldment. Cut and discard safety wire and remove two bolts (one per side) securing side engine mounts to F046 lower frames.
12. Carefully remove engine; verify F579-1 bellmouth is clear of firewall, and loose wires, cables, fittings and line assemblies are clear of engine during separation. Install bellmouth cover.
13. Prepare engine for Rolls-Royce maintenance facility per Section 71-11, as required.

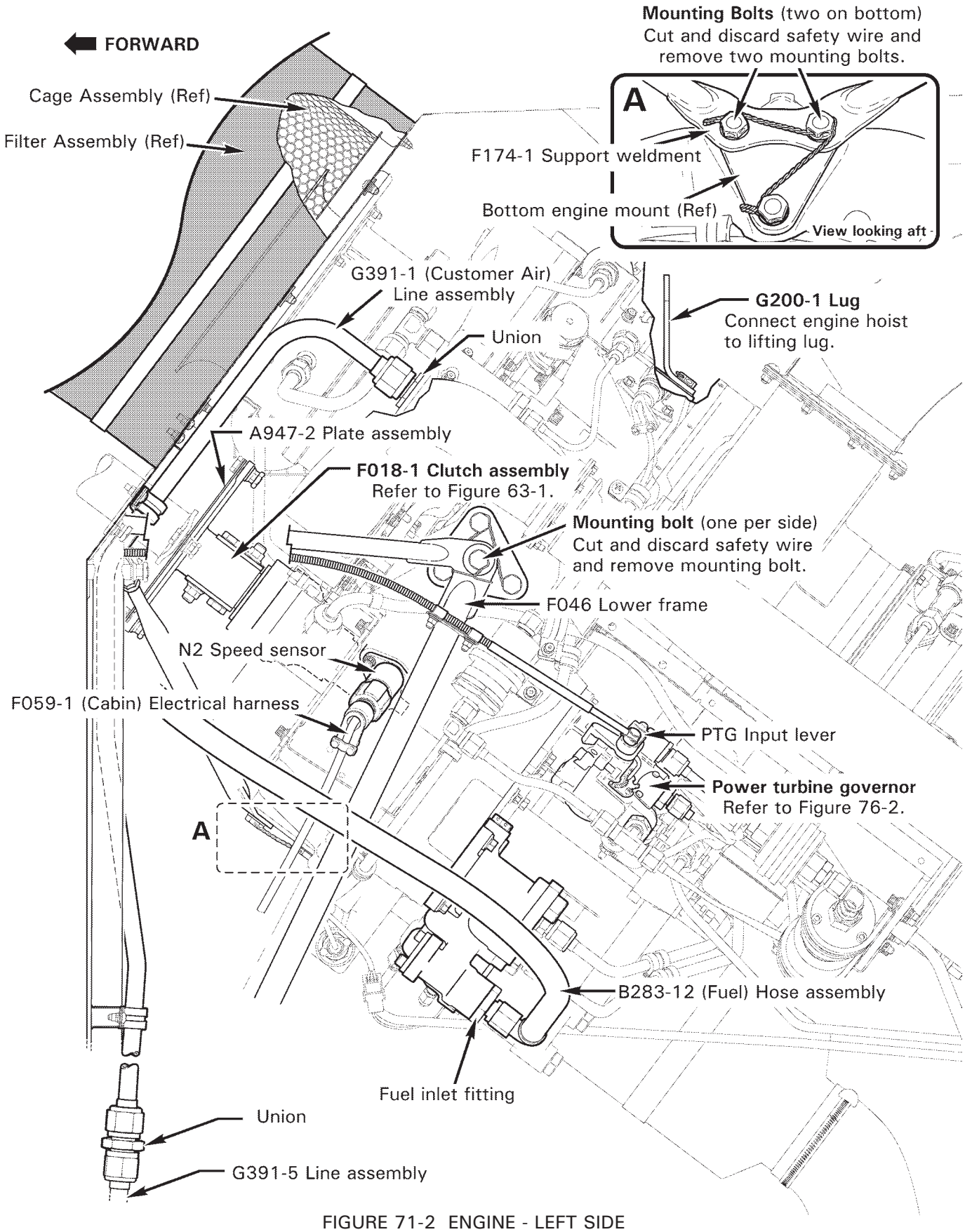

FIGURE 71-2 ENGINE - LEFT SIDE

71-10 Engine (continued)

B. Installation

1. Prepare engine for installation in helicopter per Section 71-12, as required.
2. Refer to Figures 71-1 and 71-2. Connect engine hoist to G200-1 engine lifting lug.
3. Remove F579-1 bellmouth cover. Carefully install engine, inserting bellmouth through firewall. Do not pinch loose wires or cables, or damage fittings or line assemblies. Before installing engine mounting hardware, verify the inlet seal is centered when pressed against the firewall, and that the seal is not twisted or pinched.
4. Install hardware securing side engine mounts to F046 frames. Standard torque bolts (one per side) per Section 20-32; install 0.032-inch diameter lockwire and safety bolts to frames. Install hardware securing bottom engine mount to F714-1 support weldment. Special torque bolts per Section 20-33; install 0.032-inch diameter lockwire and safety three bolts together. Remove engine hoist.
5. Install exhaust per Section 71-30.
6. Refer to Figure 63-1. Install hardware securing F018-1 clutch assembly yoke to (aft) A947-2 plate assembly, as removed. Perform engine driveline shimming per Section 63-11. Standard torque nuts and palnuts per Section 20-32, and torque stripe per Figure 5-1. Verify 0.2 inch minimum clearance between shaft weldment and firewall grommet; verify equal gap concentrically between shaft and box assembly hole edges. Adjust F174-1 support weldment rod ends per Section 53-31 as required.
7. Remove cap and torque check engine compressor (customer air) union per RR300 Operation and Maintenance Manual (OMM). Remove plug and connect G391-1 line assembly B-nut to engine. Special torque B-nuts per Section 20-33 and torque stripe fittings. Install hardware securing line assembly clamps.
8. Refer to Figure 79-2. Remove caps and torque check engine (oil line) fittings per RR300 OMM. Remove plugs and connect F723-1, F723-2, and F723-3 line assembly B-nuts to engine. Special torque B-nuts at engine, F649-1 oil cooler, and G689-1 oil tank assembly per Section 20-33, and torque stripe fittings. Install hardware securing line assembly clamps. Service engine oil per RR300 OMM; service engine oil per Section 12-60.
9. Remove cover and tape and install B277-32 clamps and A785-37 hose onto inducer bleed port and G918-1 box assembly; tighten clamps. Install MS21919WDG36 clamp around hose, and install hardware securing clamp and hose to firewall. Verify security.
10. Remove cap and torque check engine fuel inlet fitting per RR300 OMM. Remove plug and connect B283-12 (fuel) hose assembly B-nut to inlet fitting. Special torque B-nut per Section 20-33 and torque stripe per Figure 5-1. Push fuel shut off valve ON.
11. Connect F059-01 (cabin) electrical harness plug to N2 speed sensor; connect cabin harness "TMP" (torquemeter oil pressure) and "MOP" (main oil pressure) plugs to engine sensors. Connect cabin harness to F049-02 (engine) harness at F577-1 bracket assembly. Install wires and cables on starter-generator studs according to stamping. Install hardware, special torque nuts, and torque stripe per Figure 5-1.
12. Perform FCU throttle and fuel cutoff control rigging per Sections 76-11 and 76-12. Perform PTG control rigging per Section 76-21 (perform PTG rigging check during run-up).
13. Install engine EMU per Section 71-60, as required.
14. Perform ground check per Section 5-41. Remove the air from the engine fuel system, then perform fuel flow check, per RR300 OMM. Perform run-up per Section 5-42, and PTG rigging check per Section 76-22.
15. Install engine cowling assembly per Section 53-21.

71-11 Preparing Engine for Rolls-Royce Maintenance Facility

Refer to R66 Illustrated Parts Catalog (IPC) Chapter 71.

> NOTE
>
> Cap and plug Rolls-Royce engine model 250-C300/A1 engine fluid ports, electrical connectors, etc., and in removed components, progressively during procedure to prevent foreign object contamination.

1. Refer to Figures 71-1 and 71-2. Remove hardware securing (2) MS21919WCH14 clamps to Rolls-Royce engine model 250-C300/A1 engine vertical firewall and F577-5 bracket. Loosen B277-8 clamp and remove A785-36 hose and F170-1 fitting. Install plug.
2. Refer to Figure 76-1. Remove F147-1 (minimum throttle stop) screw and D930-2 spring from fuel control unit.
3. Refer to Figure 71-4. Remove hardware securing F169-2 base and F577-5 bracket to exhaust collector. Remove base and bracket, and install exhaust collector cover.
4. To remove F049-09 harness assembly:
   a. Disconnect F049-09 harness assembly's plug from engine magnetic plug on bottom of engine accessory gearbox.
   b. Remove hardware securing harness wire terminal to igniton exiter box stud.
   c. Cut and discard ty-raps as required, and disconnect G426-1 (fuel differential pressure) switch assembly wire from harness at connectors. Cut and discard stand-off ty-raps at switch wire and F741-1 line assembly.
   d. Remove hardware securing (2) MS21919WCH4 clamps to (bottom of) engine gearbox.
   e. Disconnect harness plugs from anti-ice valve assembly solenoid, anti-ice pressure switch assembly, and N_1 speed pick-up assembly.
   f. Remove hardware securing (2) MS21919WCH4 clamps to (2) engine-supplied MS9592-050 brackets.
   g. Remove hardware securing harness wire terminals to measured gas temperature (MGT) thermocouple studs.
   h. Disconnect harness plug from engine magnetic plug near oil line unions.
   i. Cut and discard ty-raps as required, and disconnect D745-3 pressure switch assembly from harness at connectors.
   j. Remove hardware securing F577-1 and F577-3 bracket assemblies to (right side of) engine gearbox. Remove harness.
5. Remove engine inlet bellmouth per Section 71-23 Part A steps 2 and 3.
6. Disconnect F741-1 line assembly from G426-1 switch assembly and fuel pmp's A919-0D reducer and remove line.
7. Disconnect F727-1 line assembly from fuel pump's A919-2D reducer. Disconnect F727-2 line assembly from engine fireshield's drain fitting. Remove hardware securing MS21919WCH4 clamp the combustion section's plug flange and remove lines.

71-11 Preparing Engine for Rolls-Royce Maintenance Facility (continued)

8. Remove A919-0D and A919-2D reducers, and G426-1 switch assembly, from fuel pump.

9. Remove hardware securing F593-3 plate to bottom of engine gearbox and remove plate.

10. Remove hardware securing engine-supplied rear PTO pad cover and remove cover. Remove bolt, washer, and G732-1 cap securing F018-1 clutch assembly in engine gearbox and remove clutch assembly.

11. Remove AN815-8D union from engine gearbox TANK VENT port, AN815-8D union or CV26-77 check valve (early R66s) from OIL OUTLET port, and AN815-10D union from OIL INLET port. Remove D745-3 pressure switch assembly from engine gearbox.

12. Cut and discard safety wire, remove hardware securing G200-1 mount and G200-2 cover from (top of) engine gearbox, and remove mount and cover. Remove residual B270-1 sealant.

71-12 Preparing Engine for Helicopter Installation

Refer to R66 Illustrated Parts Catalog (IPC) Chapter 71.

NOTE

Remove protective caps and plugs progressively during procedure to prevent foreign object contamination.

1. Refer to Figures 71-1 and 71-2. Position G200-2 cover and G200-1 mount on top of Rolls-Royce engine model 250-C300/A1 accessory gearbox as shown. Install hardware, standard torque bolts per Section 20-32, and torque stripe per Figure 5-1. Install 0.032-inch diameter lockwire and safety bolt heads together. Seal cover edges with B270-1 sealant.

2. Install D745-3 pressure switch assembly on front of engine gearbox as shown, special torque switch per Section 20-33, and torque stripe per Figure 5-1.

3. Install NAS617-10 packing on AN815-10D union and install union in engine gearbox OIL INLET port. Special torque union per Section 20-33 and torque stripe per Figure 5-1.

CAUTION

Installing CV26-77 check valve incorrectly can destroy oil tank.

4. Install NAS617-8 packing on AN815-8D union or CV26-77 check valve (early R66s; at straight thread) and install union or check valve (flow arrow to point away from engine) in engine gearbox OIL OUTLET port. Special torque union or check valve per Section 20-33 and torque stripe per Figure 5-1.

5. Install NAS617-8 packing on AN815-8D union and install union in engine gearbox TANK VENT port. Special torque union per Section 20-33 and torque stripe per Figure 5-1.

6. Inspect F018-1 clutch assembly splines and verify no evidence of galling. Also, verify end of thread insert is 0.090 - 0.110 inch inboard from tip of splined end of clutch housing; contact RHC Technical Support if thread insert position is incorrect. Lubricate clutch splines using B270-21 protectant. Insert clutch in engine gearbox, and install G732-1 cap, bolt, and washer at rear PTO pad. Standard torque bolt per Section 20-32 and torque stripe per Figure 5-1.

71-12 Preparing Engine for Helicopter Installation (continued)

7. Install engine-supplied rear PTO pad cover, and engine-supplied nuts and spacers. Special torque nuts per Section 20-33 and torque stripe per Figure 5-1.

8. Position F593-3 plate on bottom of engine gearbox and install aft bolt, finger tight.

9. Install G426-1 switch assembly in fuel pump BF (before filter) port. Special torque switch per Section 20-33 and torque stripe per Figure 5-1.

10. Install MS29512-3 packing on A919-0D reducer and install reducer in fuel pump AF (after filter) port. Special torque reducer per Section 20-33 and torque stripe per Figure 5-1.

11. Install MS29512-3 packing on A919-2D reducer and install reducer in fuel pump DRAIN port. Special torque reducer per Section 20-33 and torque stripe per Figure 5-1.

12. Connect F727-1 line assembly to fuel pump's A919-2D reducer. Connect F727-2 line assembly to engine fireshield's drain fitting. Install one MS21919WCH4 clamp around each line, install hardware securing lines to combustion section's plug flange, and tighten screw. Special torque F727-1 line assembly nut at reducer per Section 20-33 and torque stripe per Figure 5-1; special torque F727-2 line assembly at fireshield's drain fitting and torque stripe per Figure 5-1. Verify security.

13. Connect F741-1 line assembly to G426-1 switch assembly and fuel pump's A919-0D reducer. Special torque nuts per Section 20-33 and torque stripe per Figure 5-1.

14. Install engine inlet bellmouth per Section 71-23 Part B steps 1 & 2. Install bellmouth cover.

15. To install F049-09 harness assembly:

    a. Position F577-1 bracket assembly on F049-09 harness assembly's D38999-20FC connector so connector's main keyway will face outboard. Install and tighten hardware; verify security. Install bracket on (right side of) engine gearbox, special torque nuts per Section 20-33, and torque stripe per Figure 5-1.

    b. Install MS21919WCH8 clamp around harness assembly and install clamp on F577-3 bracket assembly. Install and tighten hardware. Install bracket on (right side of) engine gearbox, special torque nuts per Section 20-33, and torque stripe per Figure 5-1.

    c. Connect harness to D745-3 pressure switch assembly at connectors. Verify security. Install (2) MS3367-7-9 ty-raps to secure plug. Cinch ty-raps until snug without overtightening and trim tips flush with heads.

    d. Connect harness plug to engine magnetic plug near oil line unions. Verify plug security.

    e. Install harness wire terminals (white-to-white, green-to-green) on measured gas temperature (MGT) thermocouple studs. Install hardware, special torque nuts per Section 20-33, and torque stripe per Figure 5-1.

    f. Verify (2) engine-supplied MS9592-050 brackets are installed on engine lube oil filter assembly per Rolls-Royce SB RR300-72-014. Install (2) MS21919WCH4 clamps around harness assembly and install clamps on brackets. Install and tighten hardware; verify security.

    g. Connect harness plugs to anti-ice valve assembly solenoid, anti-ice pressure switch assembly, and N_1 speed pick-up assembly. Verify security.

71-12 Preparing Engine for Helicopter Installation (continued)

15. h. Install (2) MS21919WCH4 clamps around harness assembly and install clamps on (bottom of) engine gearbox. Install hardware, special torque nuts per § 20-33, and torque stripe per Figure 5-1.

    i. Stand-off ty-rap G426-1 (fuel differential pressure) switch assembly's wire from F741-1 line assembly using MS3367-4-9 ty-raps. Connect switch wire to harness at connectors. Install (2) MS3367-5-9 ty-raps to secure connectors to harness. Cinch ty-raps until snug without overtightening and trim tips flush with heads.

    j. Install harness wire terminal on ignition exiter box stud. Install hardware, special torque nut per § 20-33, and torque stripe per Figure 5-1.

    k. Connect harness plug to engine magnetic plug on bottom of engine gearbox. Verify plug security.

16. Refer to Figure 71-4. Verify F169-2 (exhaust) base and engine exhaust collector mating surfaces are clean and dry, and lay 0.25 inch bead 7020-3 ceramic putty on top of exhaust collector flange. Position F169-2 base and F577-5 bracket on exhaust collector and install hardware. Verify security. Remove excess putty. Install exhaust protective cover.

17. Refer to Figure 76-1. Install F147-1 (minimum throttle stop) screw in fuel control unit, special torque screw per § 20-33, and torque stripe per Figure 5-1. Install D930-2 spring.

18. Install (2) A215-016 o-ring and NAS617-12 packing on F170-1 fitting and install fitting in engine gearbox OB VENT port. Special torque fitting per § 20-33 and torque stripe per Figure 5-1. Position A785-36 hose and B277-8 clamp over fitting and tighten clamp. Verify security. Position (2) MS21919WCH14 clamps over hose and install and tighten hardware securing clamps to engine vertical fireshield and F577-5 bracket. Verify security.

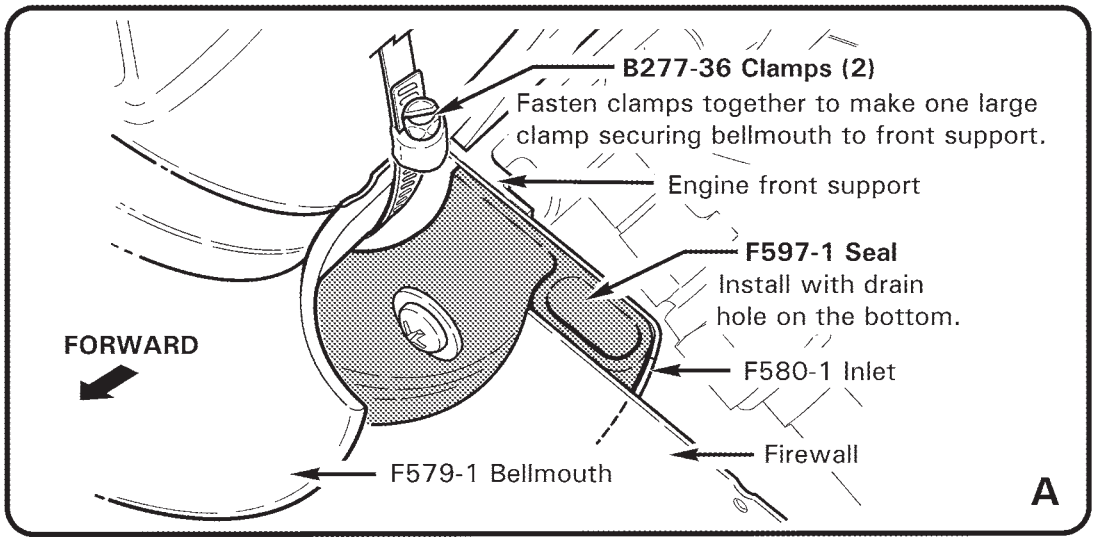

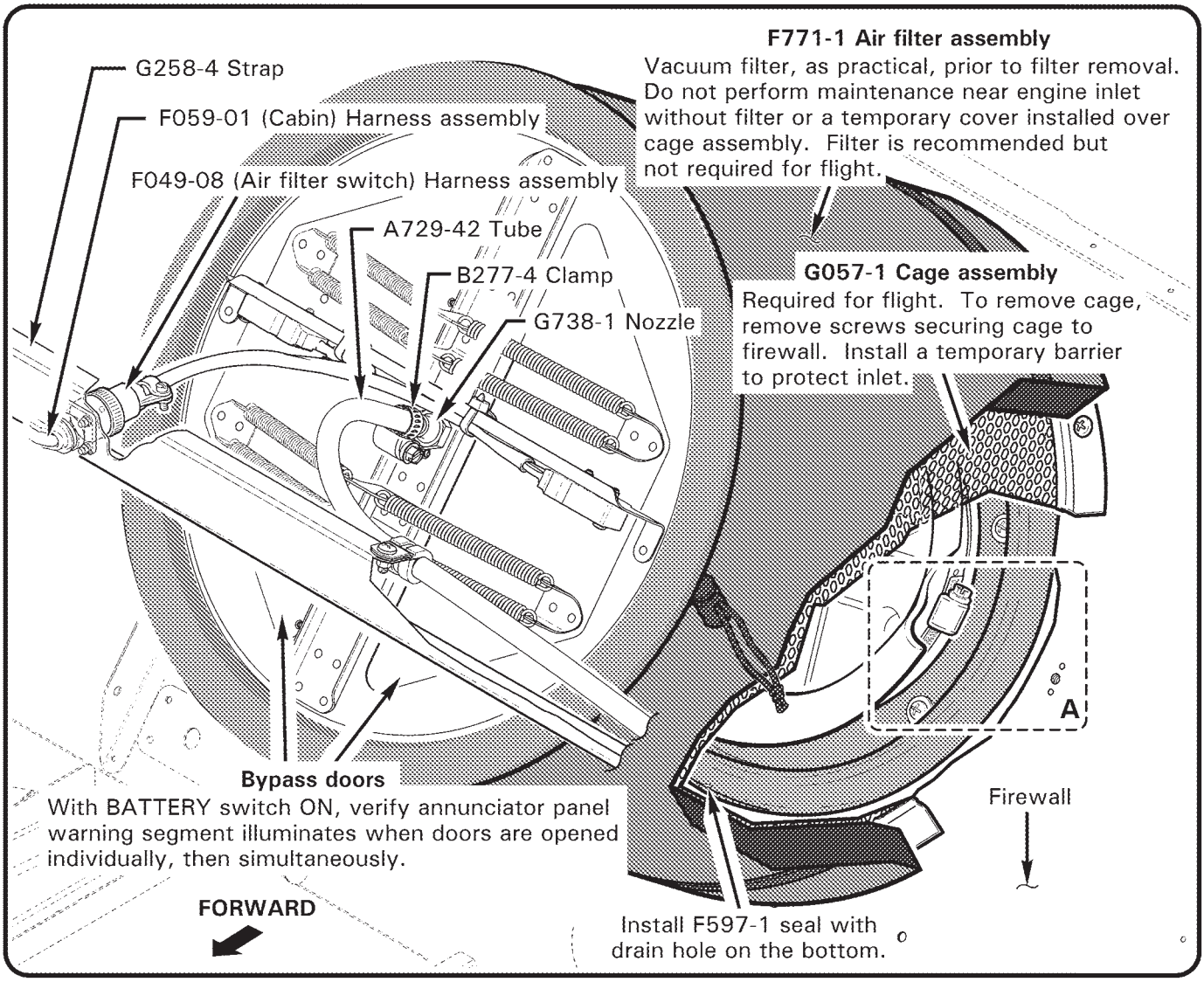

FIGURE 71-3 INDUCTION (STANDARD FILTER SHOWN)

71-20 Induction

NOTE

Refer to § 12-70 for (Engine) Compressor Rinse and Wash procedures.

CAUTION

Never operate engine without G057-1 cage assembly installed. F771-1 (foam) filter assembly not required for flight; 146150-101 (inlet barrier filter) filter assemblies not required for flight.

CAUTION

Do not perform maintenance near engine inlet without cage and filter(s) or a temporary cover installed. Contact Rolls-Royce Customer Support if foreign objects enter inlet.

71-21 Air Filter Assembly

A. Description

The standard reticulated polyurethane foam filter is installed over the G057-1 cage assembly (refer to § 71-22) and secured with locking cords. The foam filter is a disposable filter not intended for cleaning, and is to be replaced on condition.

The optional G058-1 inlet barrier filter cage assembly is a separate installation with additional parts that secure the filters to the G057-1 cage assembly and that secure the assembly to the upper frame and firewall. A filter maintenance aid helps to determine if cleaning is required earlier than scheduled (every 300 hours or 1 year, whichever occurs first); certain operating environments require more frequent cleaning. The inlet barrier filter may be cleaned 15 times before replacement.

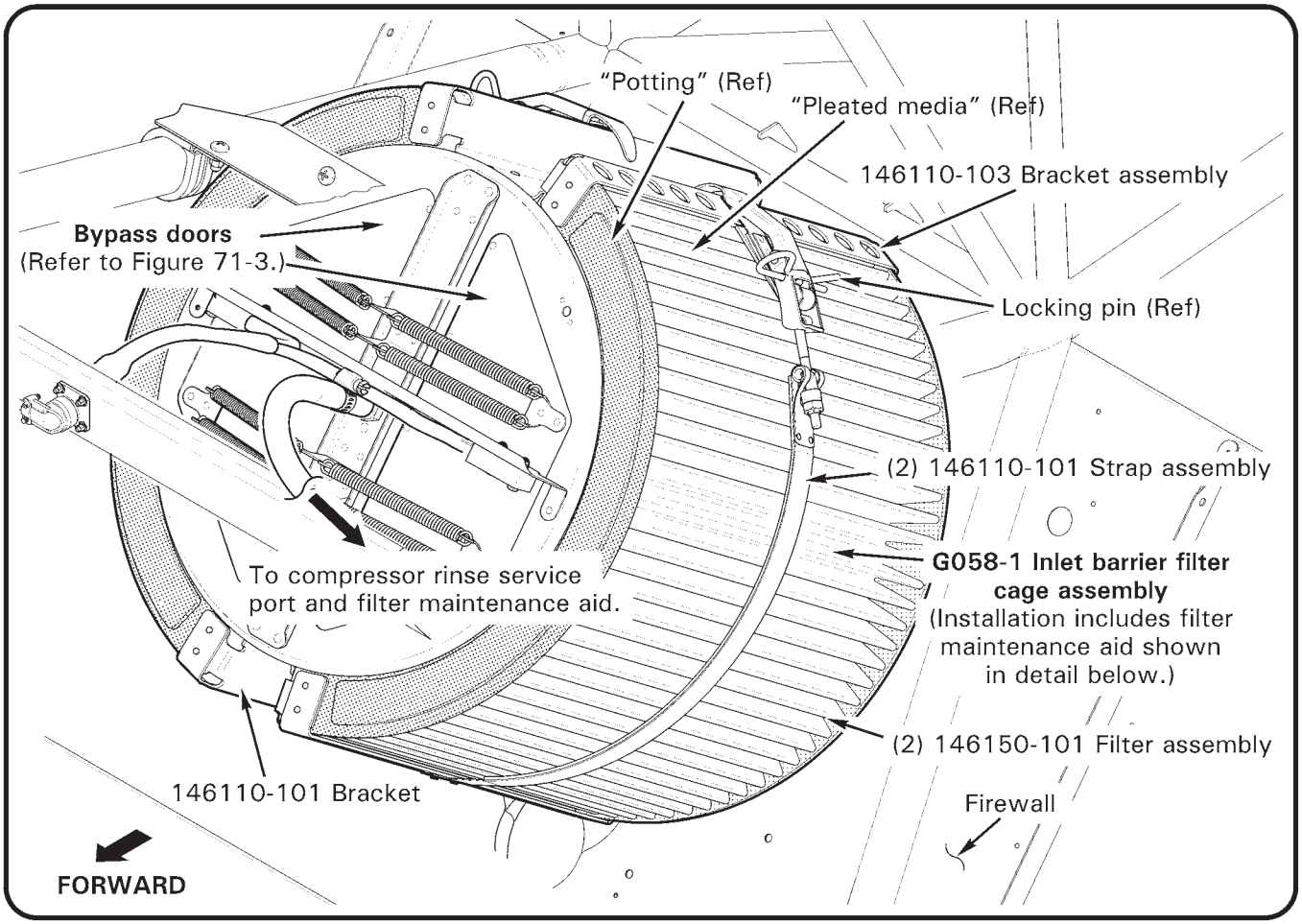

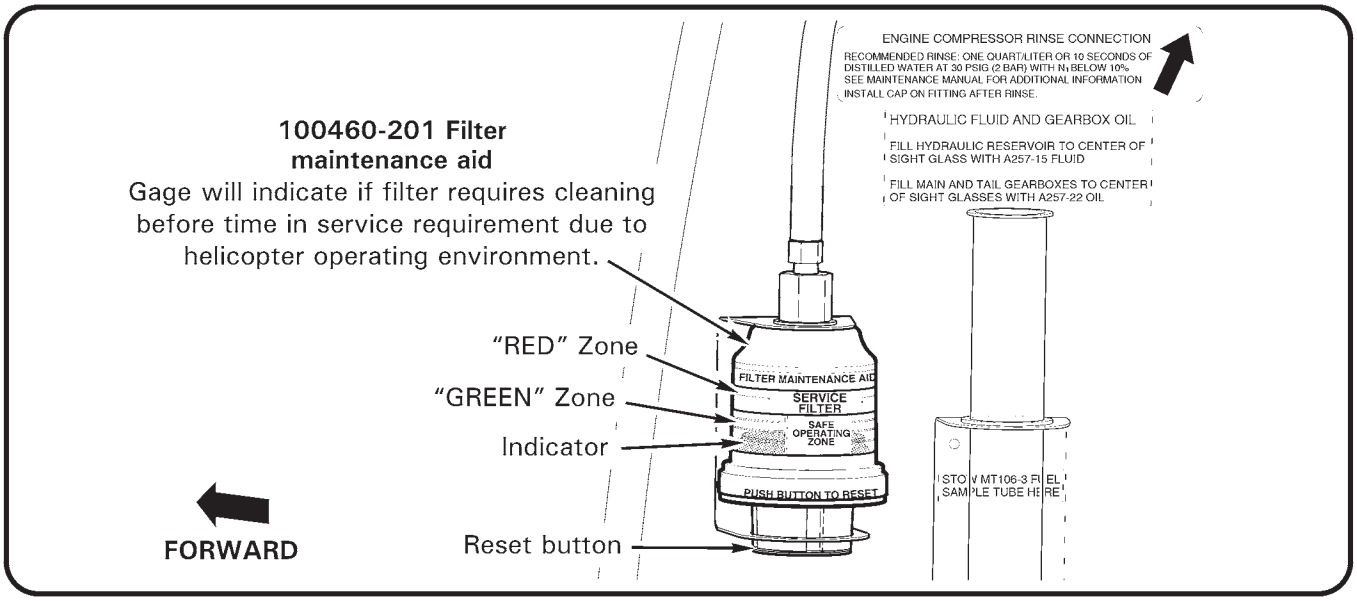

FIGURE 71-4 INDUCTION (INLET BARRIER FILTER SHOWN)

71-21 Air Filter Assembly (continued)

B. Removal

Standard Filter:

1. Remove tailcone cowling assembly per § 53-23.
2. Refer to Figure 71-3. Vacuum exterior of F771-1 filter assembly.
3. Disconnect F049-08 (bypass) switch assembly harness from airframe harness at connectors.
4. Loosen clamp securing tube to compresssor rinse nozzle and pull tube off of nozzle.
5. Release cord locks, loosen cords as required, and pull filter forward off of G057-1 cage assembly.
6. Install temporary cover over cage assembly.

Inlet Barrier Filter:

1. Remove tailcone cowling assembly per § 53-23.
2. Refer to Figure 71-4. Remove locking pin from strap assembly, release latch, and move strap assembly aside.
3. Remove 146150-101 filter from G058-1 cage assembly brackets; handle filter by the potting to avoid damaging pleated media.
4. Repeat steps 2 and 3 for other filter.

C. Installation

Standard Filter:

1. Refer to Figure 71-3. Remove temporary cover. Pull F771-1 filter assembly aft over G057-1 cage assembly and tighten cords as required. Verify security.
2. Install clamp and tube on compressor rinse nozzle and tighten clamp. Verify security.
3. Connect F049-08 (bypass) switch assembly harness to airframe harness at connectors.
4. Turn battery switch on. Verify annunciator panel warning segment illuminates when bypass doors are opened individually, then simultaneously. Turn battery switch off.
5. Install tailcone cowling assembly per § 53-23.

71-21 Air Filter Assembly (continued)

C. Installation (continued)

Inlet Barrier Filter:

1. Service inlet barrier filter per Part D.
2. Refer to Figure 71-4. Remove temporary cover. Insert 146150-101 filter in G058-1 cage assembly brackets; handle filter by the potting to avoid damaging pleated media. Verify filter is properly seated.
3. Latch strap assembly. Adjust strap tension as required to ensure filter security, but without overtightening. Install locking pin.
4. Repeat steps 1 thru 3 for other filter.
5. Install tailcone cowling assembly per § 53-23.

D. Servicing

Standard Filter:

Filter should be removed & cleaned with water when visibly dirty. Replace filter if foam is visibly damaged or deteriorated.

Inlet Barrier Filter:

1. Visually inspect each filter assembly for obvious damage; replace filter(s) as required per Parts B and C.
2. To clean and dry each filter assembly:
   a. Remove debris as practical from dirty side of filter assembly using a soft bristle brush.

CAUTION

Use only ZOK 27 cleaner to clean filter media.

CAUTION

Do not use steam, a high-pressure washer, or compressed air to clean filter assemblies.

   b. Using a spray bottle, apply ZOK 27 cleaner to both sides of filter media until saturated. Allow to soak for minimum 10 minutes (30 minutes or more may be necessary for high-contaminant environments).
   c. Rinse filter with clean water in opposite direction of airflow (from clean side) using low-pressure stream. Orient filter so pleats are vertical; rinse side-to-side starting at the top and working downward. Proceed downward only when water runoff is clear.

71-21 Air Filter Assembly (continued)

D. Servicing (continued)

Inlet Barrier Filter (continued):

2. d. Rinse filter in direction of airflow per step 2c.

   e. Rotate filter top to bottom and perform steps 2c and 2d.

CAUTION
Do not use compressed air, or heat from any source, to dry filter assemblies.

   f. Shake off excess water. Allow filter assembly to dry at ambient temperature (above freezing), protected from contaminants.

3. Using a permanent marker, mark cleaned filter(s) with "X" through last unmarked indented potting number (1–15). Replace 146150-101 filter at the next service interval after 15 cleanings.

4. For each filter: Visually inspect filter pleats for straightness. Visually inspect filter media for small ruptures, tears, or holes. Visually inspect potting compound for cracks, gouges, or gaps between filter and compound. Replace filter(s) as required per Parts B and C.

CAUTION
Verify filter media is completely dry before applying oil. Use only approved oil; never put an un-oiled filter in service.

5. Apply 4.5 oz total 100100-045 filter oil to each filter. Using squeeze bottle with tip, apply a small stream of oil (sparingly) along entire peak of each pleat on both sides of filter (save some for final application). Let filter sit for 30 minutes minimum as oil "wicks" into surrounding filter media. Apply remaining oil not to exceed quantity above to any areas that are still white or not yet uniform in color.

6. Push yellow button to reset filter maintenance aid.

71-21 Air Filter Assembly (continued)

E. Scheduled Inspections

Standard Filter:

Refer to § 5-45 100-Hour/Annual Inspection. Replacement of F771-1 filter assembly is on condition.

Inlet Barrier Filter:

Refer to § 5-45 100-Hour/Annual Inspection.

Service 146150-101 filters per Part D every 300 hours or 1 year, whichever occurs first. Replace 146150-101 filters at the next service interval after 15 cleanings.

F. Special Inspections

Standard Filter:

If pilot reports **AIR FILTER caution segment illuminates** during engine operation, when engine is shut down, verify proper function of bypass switch. Turn battery switch on. Verify caution segment illuminates when bypass doors are opened individually, then simultaneously. Turn battery switch off. If bypass switch functions properly, replace F771-1 filter assembly per Parts B and C.

If pilot reports a **failed power assurance check** (refer to § 5-43), replace F771-1 filter assembly per Parts B and C.

Inlet Barrier Filter:

If pilot reports **AIR FILTER caution segment illuminates** during engine operation, when engine is shut down, verify proper function of bypass switch. Turn battery switch on. Verify caution segment illuminates when bypass doors are opened individually, then simultaneously. Turn battery switch off. If bypass switch functions properly, service 146150-101 filters per Part D.

If pilot reports a **failed power assurance check** (refer to § 5-43), service 146150-101 filters per Part D.

If **filter maintenance aid indicates in red zone**, service 146150-101 filters per Part D.

71-22 Cage Assembly

A. Removal

1. Remove tail rotor drive fan shaft per § 65-10.
2. Remove air filter assembly per § 71-21.
3. Remove hardware securing G057-1 or G058-1 cage assembly to firewall and remove cage. Install suitable barrier to prevent foreign objects from entering engine inlet.

B. Installation

1. Remove barrier, position G057-1 or G058-1 cage assembly against firewall, and install hardware securing cage to firewall. Verify security.
2. Install air filter assembly per § 71-21.
3. Install tail rotor drive fan shaft per § 65-10.

71-23 Engine Inlet Bellmouth

A. Removal

1. Remove engine per § 75-10.
2. Refer to Figure 71-3. Remove F579-1 bellmouth cover and loosen B277-36 clamps securing bellmouth to engine front support. Remove bellmouth and clamps.
3. Remove hardware securing F597-1 seal and F580-1 inlet to engine front support. Remove seal and inlet. Install cover over front support.

B. Installation

1. Refer to Figure 71-3. Remove engine front support cover, install F580-1 inlet and F597-1 seal (drain hole on bottom) on front support, and install hardware. Verify security.
2. Install B277-36 clamps and F579-1 bellmouth over front support flange, and tighten clamps. Verify security.
3. Install engine per § 71-10.

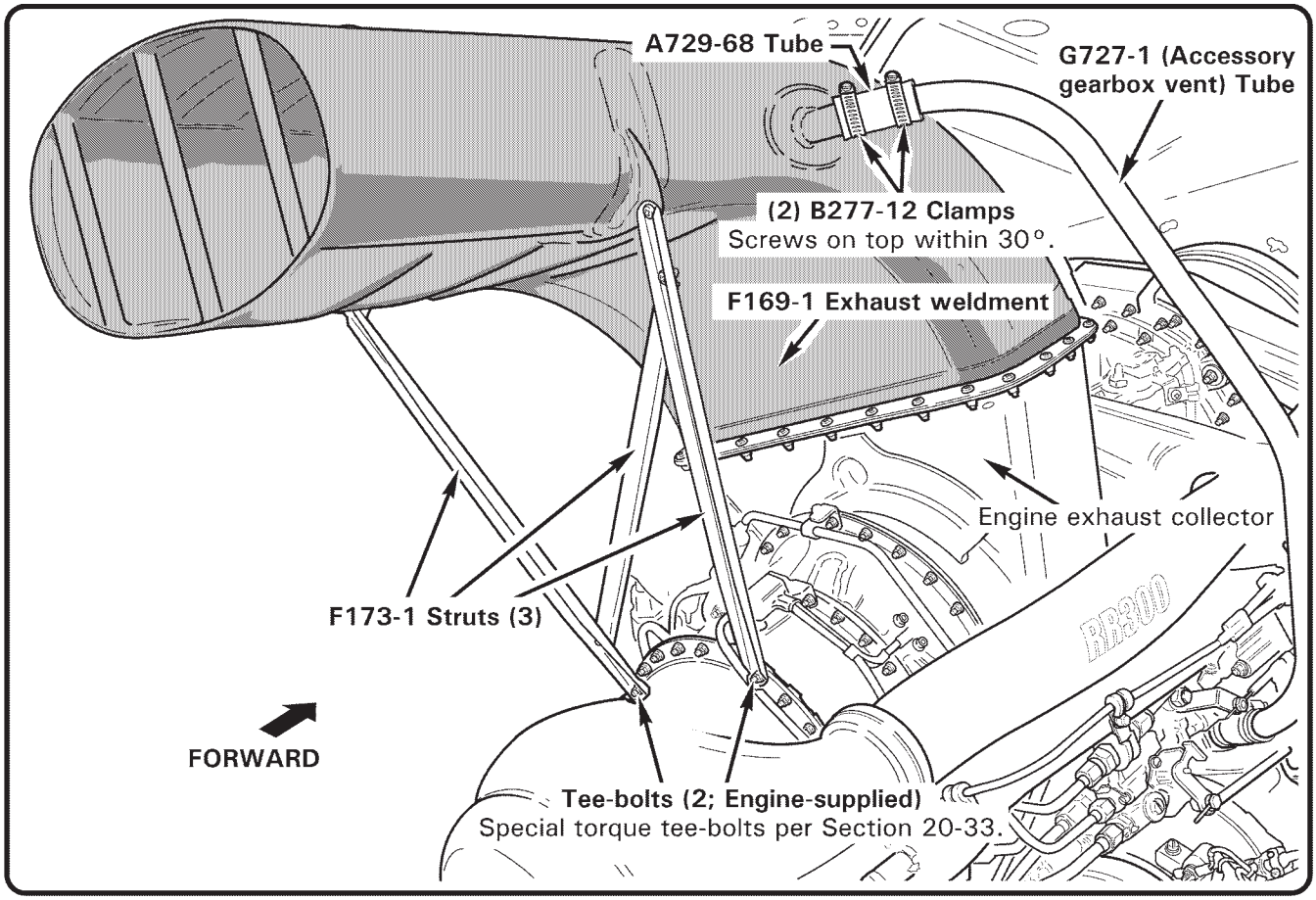

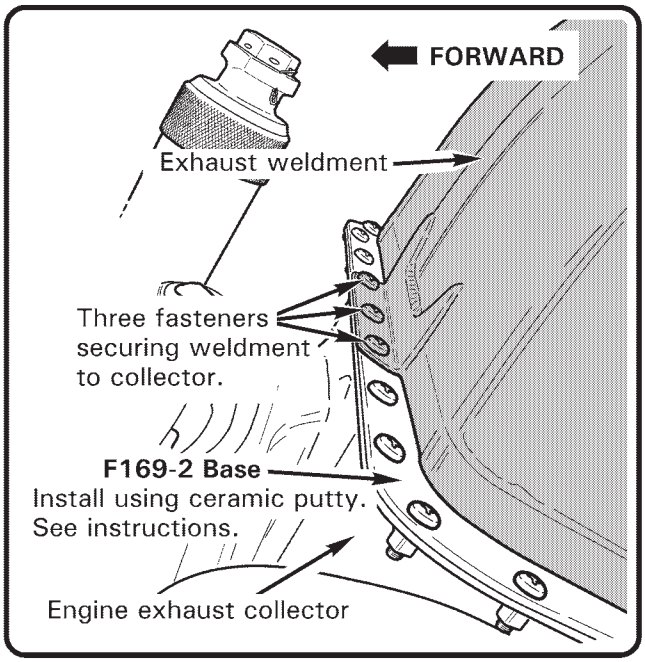

FIGURE 71-5 EXHAUST

71-30 Exhaust Weldment

A. Removal

1. Remove engine cowling assembly per § 53-21.
2. Refer to Figure 71-5. Remove hardware securing F173-1 struts to F169-1 exhaust weldment and engine, and remove struts.
3. Loosen clamp(s) securing (accessory gearbox vent) tubes/hose to exhaust; pull tubes/hose off of exhaust weldment.
4. Remove three fasteners securing exhaust weldment to engine exhaust collector. Carefully lift exhaust weldment up and off of F169-2 base flange, and remove exhaust weldment.
5. As required, remove hardware securing base and F577-5 bracket (early R66s) to exhaust collector and remove base. Install exhaust collector cover.

> NOTE
>
> F169-1 exhaust weldment material is Type 321 CRES sheet.

B. Installation

1. Refer to Figure 71-5. If F169-2 base is installed, proceed to step 3. Verify base and engine exhaust collector mating surfaces are clean and dry, and lay 0.25 inch bead 7020-3 ceramic putty on top of exhaust collector flange.
2. Position F169-2 base and F577-5 bracket (early R66s) on exhaust collector and install hardware. Verify security. Remove excess putty.
3. Position F169-1 exhaust weldment on base and install three fasteners securing exhaust weldment to exhaust collector.
4. Install hardware securing F173-1 struts to exhaust weldment and engine. Special torque engine tee-bolts per § 20-33.
5. Position (accessory gearbox vent) tubes/hose with clamp(s) over exhaust weldment vent tube. Orient clamp screw(s) (and any slight bunching of hose, early R66s) is on top within 30°, and tighten clamp(s). Verify security.
6. Install engine cowling assembly per § 53-21.

71-40 Accessories

71-41 Starter-Generator

A. Removal

1. Remove engine cowling assembly per § 53-21.
2. Refer to Figure 71-1. Verify heat shrink stamping is legible (or mark wires and cables) and remove hardware securing wires and cables to starter-generator studs.
3. Remove starter-generator per RR300 Series Operation and Maintenance Manual (OMM).

B. Installation

1. Install starter-generator per RR300 Series Operation and Maintenance Manual (OMM).
2. Refer to Figure 71-1. Install wires and cables on starter-generator studs according to stamping. Install hardware, special torque nuts per § 20-33, and torque stripe per Figure 5-1.
3. Install engine cowling assembly per § 53-21.

71-42 Generator Control Unit (GCU)

A. Removal

1. Open baggage compartment door. Remove hardware securing G248-1 cover (battery compartment) to inner compartment and remove cover.
2. Disconnect F049 (GCU) electrical harness plug from GCU. Remove mounting hardware, and remove GCU. Cap receptacles.

B. Installation

1. Open baggage compartment door. Position GCU on inner compartment shelf and install mounting hardware. Verify security.
2. Remove caps and connect F049 (GCU) electrical harness plug to GCU.

> NOTE
>
> Verify MS3106R24-28S plug is fully-engaged in GCU receptacle. Rotate plug collar until tight.

3. Install hardware securing G248-1 cover to inner compartment. Close and secure baggage door.

71-43 Engine Monitoring Unit (EMU)

> NOTE
>
> The electronic monitoring unit (EMU) is a serialized component assigned to the engine. When removing the engine, remove the engine's EMU per § 71-43, as required.

A. Removal

1. Remove hardware securing F003-4 (RH) seat back assembly to cabin.
2. Disconnect F059-01 (cabin) electrical harness "EMU" plug and F049-07 (USB) harness plug from EMU.
3. Remove hardware securing EMU to bulkhead and remove EMU. Cap receptacles.

B. Installation

1. Remove caps, position EMU on bulkhead, and install hardware. Verify security.
2. Connect F059-01 (cabin) electrical harness "EMU" plug and F049-07 (USB) harness plug to EMU.
3. Turn battery switch on. After 10 seconds press annunciator panel test button; verify EMU amber warning segment illuminates, and is solid, indicating normal EMU operation. (See R66 Pilot's Operating Handbook Section 7 for complete description.) Turn battery switch off.
4. Install hardware securing F003-4 (RH) seat back assembly to cabin.

C. Downloading EMU Data

> NOTE
>
> An EMU USB receptacle is located inside the aft right seat baggage compartment, on the underside of the aft ledge. Use a flashlight and mirror when inserting USB cable into receptacle.

Download summary or diagnostic data per RR300 Series Operation and Maintenance Manual (OMM).

D. Troubleshooting

1. Turn battery switch off and disconnect battery ground cable from battery negative terminal.
2. Open circuit breaker panel and verify integrity of fuse for EMU; replace fuse as required. Close circuit breaker panel.
3. Access annunciator panel plug and verify connector is fully seated on G198 annunciator panel receptacle.

71-43 Engine Monitoring Unit (EMU; continued)

D. Troubleshooting (continued)

4. Access EMU behind right, aft seatback assembly, then disconnect and reconnect EMU electrical connector.

5. Turn battery switch off and connect battery ground cable to battery negative terminal.

6. While observing the built-in indicator light on the EMU, turn battery switch on and verify light illuminates but does not flash. Steady illumination of built-in indicator light means normal EMU operation. A slow-flashing (0.5 hz) flashing light, or no illumination, indicates EMU or monitored sensor failure; perform RR300 OMM Task 77-51-00-200-801.

CHAPTER 75

ENGINE AIR SYSTEMS

Section	*Title*	*Page*
75-00	Description	75.1
75-10	Engine Anti-Ice	75.1

Intentionally Blank

CHAPTER 75

ENGINE AIR SYSTEMS

75-00 Description

This chapter includes a description of the engine anti-ice system. Refer to RR300 Series Operation and Maintenance Manual (OMM) and manufacturer's maintenance publications for system-specific inspection, repair, and maintenance procedures.

The Rolls-Royce engine model 250-C300/A1 anti-ice system provides hot compressor discharge air to the compressor front support. Areas of the front support are subject to ice formation when the engine is operated near or below freezing temperatures and visible moisture is present. An anti-ice switch located on the cyclic box cover is selected by the pilot in certain conditions (see R66 Pilot's Operating Handbook).

The engine anti-ice system includes an air valve, a solenoid valve, and a pressure switch. The air valve is mounted on top of the compressor scroll; the solenoid valve and pressure switch are mounted on top of the compressor. When anti-ice is switched "ON", the solenoid valve de-energizes, the pressure-activated air valve opens, the pressure switch closes which illuminates the green anti-ice segment on the annunciator panel, and hot, compressed-air is routed to hollow passages in the front support vanes and center hub.

Anti-ice system operation will result in some performance degradation due to hot induction air and reduced air-volume reaching the power and gas producing turbine stages.

The anti-ice solenoid valve is electrically-closed, or powered-off. Anti-ice will automatically function in the event of an electrical failure.

75-10 Engine Anti-Ice

See RR300 Series Operation and Maintenance Manual (OMM) for anti-ice system maintenance.

Intentionally Blank

CHAPTER 76

ENGINE CONTROLS

Section	Title	Page
76-00	Description	76.1
76-10	Fuel Control Unit (FCU)	76.1
76-11	FCU Throttle Control Rigging	76.3
76-12	FCU Fuel Cutoff Control Rigging	76.3
76-20	Power Turbine Governor (PTG)	76.5
76-21	PTG Control Rigging	76.5
76-22	PTG Rigging Check	76.7

Intentionally Blank

CHAPTER 76

ENGINE CONTROLS

76-00 Description

A twist grip throttle control is located on each collective stick. The controls are interconnected and actuate the Rolls-Royce engine model 250-C300/A1 fuel control input lever via a push-pull cable. The throttle is normally not used for control but is set either fully closed (idle position) or fully open.

The engine incorporates a hydromechanical governor which attempts to maintain 100% engine output shaft RPM when the throttle is in the open position. A linkage provides the power turbine governor with collective inputs to help anticipate changing power demands.

Large power changes or varying environmental conditions may cause the governor RPM setting to vary by a few percent. A momentary toggle switch (beep switch) on the collective stick is provided to trim, or "beep", the governor setting to the desired RPM. The switch controls an actuator which adjusts the linkage between the collective and power turbine governor.

The governor controls RPM under normal conditions. It may not prevent over- or under-speed conditions generated by aggressive flight maneuvers or rapid power changes.

Other engine controls include a push-pull fuel cutoff control on the console face, a start button on the pilot's collective, a key-type igniter switch, and an anti-ice switch.

76-10 Fuel Control Unit (FCU)

Refer to R66 Illustrated Parts Catalog (IPC) Figure 76-1.

A. Removal

1. Pull fuel valve OFF. Remove engine cowling assembly per Section 53-21.
2. Refer to Figure 76-1. Remove fasteners securing C522-10 throttle and A522-10 fuel cutoff control inner wires to FCU throttle and fuel cutoff levers.
3. Remove fasteners securing control housings and AN742-4 clamps to F577 bracket assemblies, as required.
4. Remove FCU per RR300 Series Operation and Maintenance Manual (OMM).
5. If sending FCU to repair facility, remove F147-1 (minimum throttle stop) screw and D930-2 spring.

B. Installation

1. If removed: Install F147-1 (minimum throttle stop) screw, special torque screw per Section 20-33, and torque stripe per Figure 5-1. Install D930-2 spring.
2. Install FCU per RR300 Series Operation and Maintenance Manual (OMM).
3. Perform throttle control rigging per Section 76-11.
4. Perform fuel cutoff control rigging per Section 76-12.
5. Push fuel valve ON.

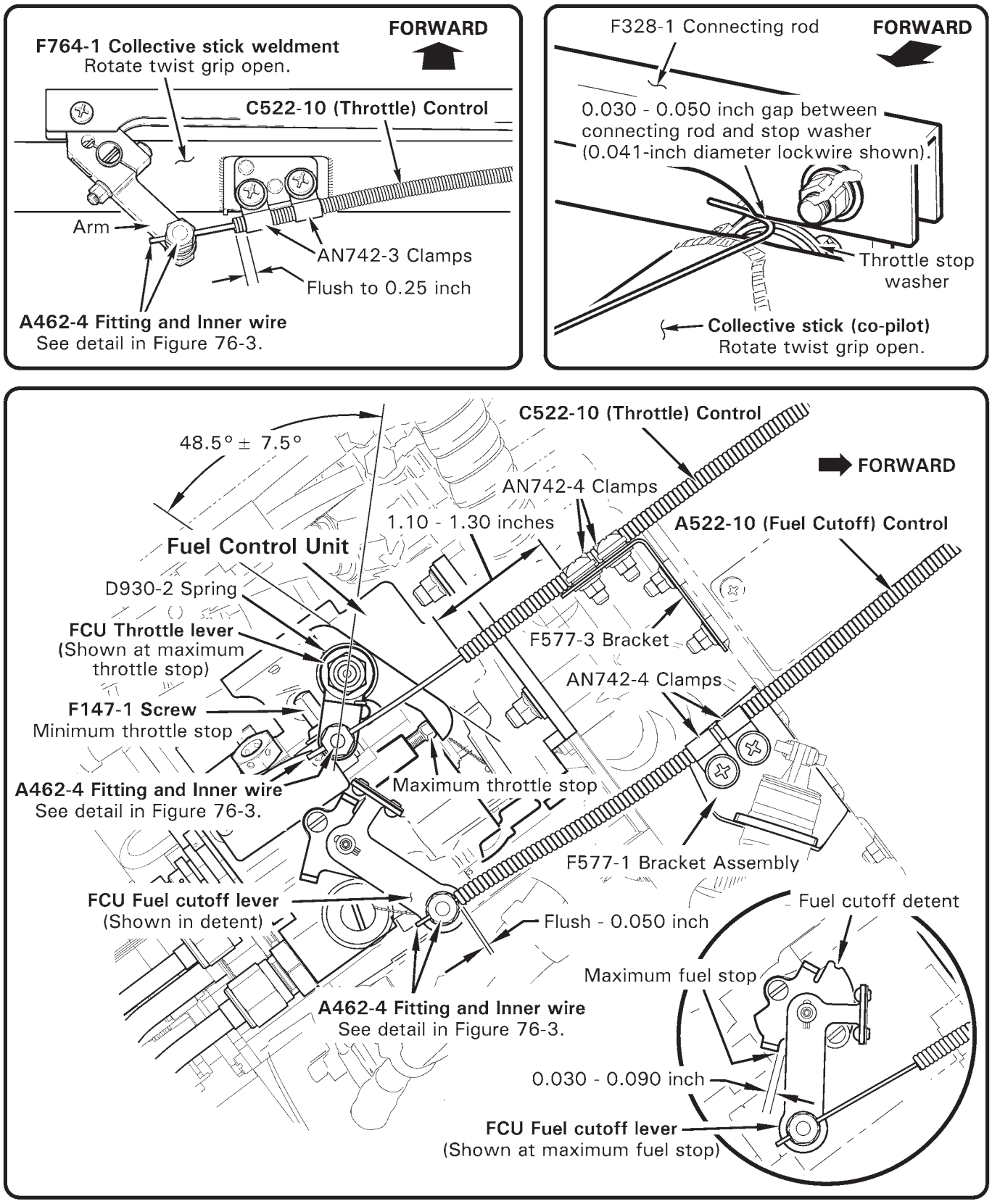

FIGURE 76-1 FUEL CONTROL UNIT

76-11 FCU Throttle Control Rigging

1. Remove engine cowling assembly per Section 53-21. Remove F461-1 collective cross tube cover and (copilot) F680-1 collective cover assembly (see Section 6-70).
2. Refer to Figure 76-1. Verify FCU throttle lever rigging angle is 48.5° ± 7.5°. As required, remove hardware securing serrated levers and reposition to proper angle. Install hardware, special torque nut per Section 20-33, & torque stripe per Figure 5-1.
3. Remove palnuts and loosen nuts securing A462-4 fittings and C522-10 (throttle) control inner wire to collective arm and to FCU throttle lever.
4. Position forward end of control housing flush-0.25 inch at or beyond edge of outboard AN742-3 clamp and install fasteners securing housing and clamps to F764-1 collective stick weldment.
5. Refer to detail in Figure 76-3. Rotate collective stick twist grip open. Position inner wire 0.10-0.30 inch beyond outboard edge of fitting in collective arm, and special torque fitting nut per Section 20-33. Install palnut, standard torque per Section 20-32, & torque stripe per Figure 5-1.
6. Position aft end of control housing 1.10-1.30 inches beyond edge of aft AN742-4 clamp and install fasteners securing housing and clamps to F577-3 bracket.
7. Refer to detail in Figure 76-3. Rotate twist grip closed; rotate and hold FCU throttle lever to contact idle stop. Verify sufficient inner wire beyond aft edge of fitting, and special torque fitting nut per Section 20-33.
8. Rotate twist grip open; verify FCU throttle lever contacts maximum throttle stop, and 0.030-0.050 inch gap between F328-1 connecting rod and throttle stop washer. Reposition fitting on wire as required until proper rod-to-washer gap, and FCU throttle lever contacts maximum throttle stop with twist grip open, and idle stop with twist grip closed.
9. Install fitting palnut, standard torque per Section 20-32, and torque stripe per Figure 5-1. Trim control wire 0.10-0.30 inch beyond aft edge of fitting.
10. Install collective cross tube cover and collective cover assembly. As required, perform FCU fuel cutoff control rigging per Section 76-12, or install engine cowling assembly per Section 53-21.

76-12 FCU Fuel Cutoff Control Rigging

1. Remove engine cowling assembly per Section 53-21.
2. Refer to Figure 76-1. Remove palnut and loosen nut securing A462-4 fitting and A522-10 (fuel cutoff) control inner wire to FCU fuel cutoff lever.
3. Rotate FCU fuel cutoff lever into OFF detent; pull fuel cutoff control knob OFF (at lower console). Position end of control housing flush-0.050 inch from forward edge of fitting and install fasteners securing housing and AN742-4 clamps to F577-1 bracket assembly.
4. Refer to detail in Figure 76-3. Verify sufficient inner wire beyond aft edge of fitting, and special torque fitting nut per Section 20-33.

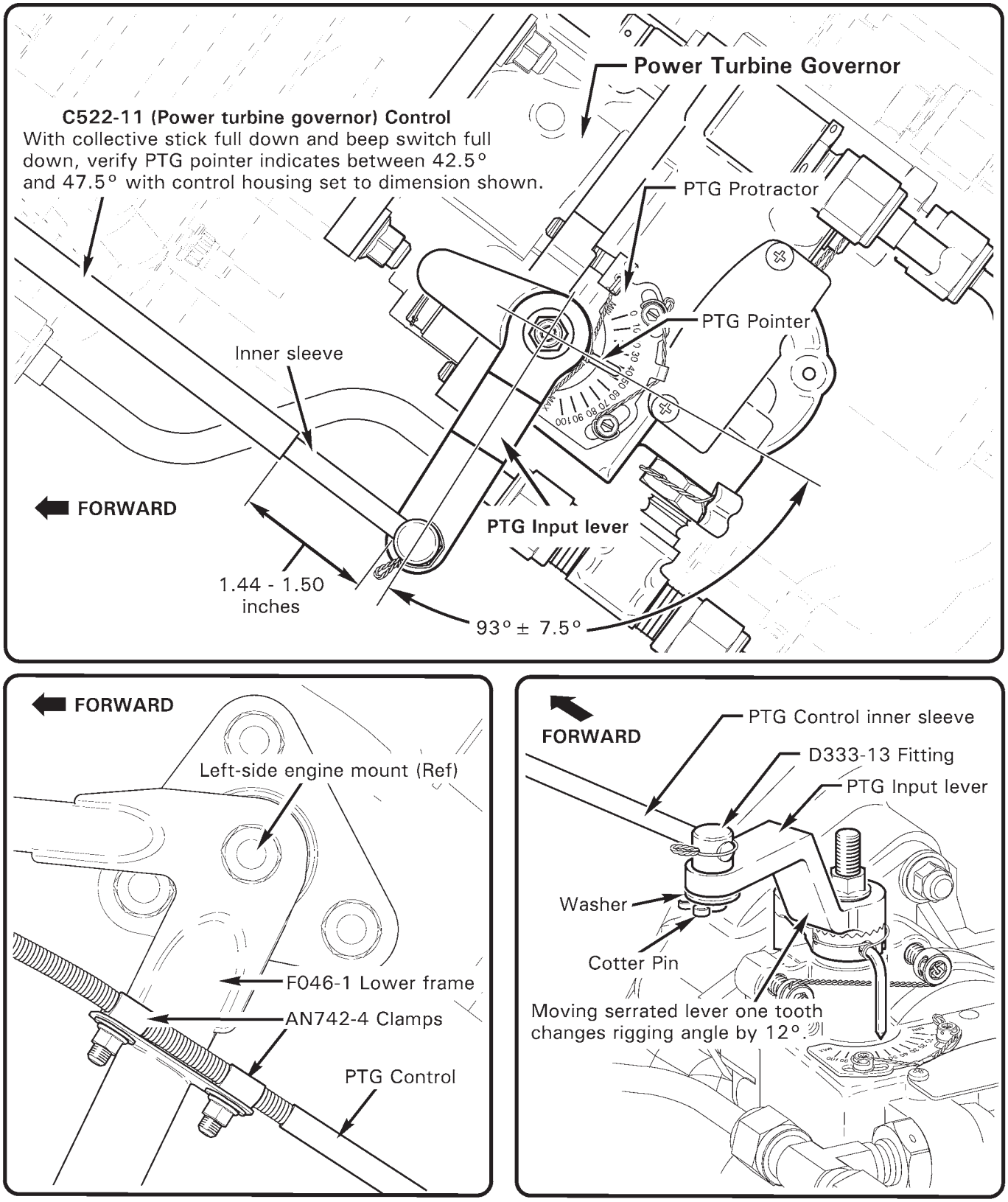

FIGURE 76-2 POWER TURBINE GOVERNOR

76-12 FCU Fuel Cutoff Control Rigging (continued)

5. Push fuel cutoff control knob ON and verify FCU fuel cutoff lever-to-maximum fuel stop clearance is 0.030-0.090 inch. Reposition fitting on wire as required until FCU fuel cutoff lever rests in detent when control is OFF and has required clearance from maximum fuel stop when control is ON.

6. Install fitting palnut, standard torque per Section 20-32, and torque stripe per Figure 5-1. Trim control wire 0.10-0.30 inch beyond aft edge of fitting.

7. Install engine cowling assembly per Section 53-21.

76-20 Power Turbine Governor (PTG)

Refer to R66 Illustrated Parts Catalog (IPC) Figures 76-5 and 76-7.

A. Removal

1. Remove engine cowling assembly per Section 53-21.

2. Refer to Figure 76-2. Remove cotter pin and washer securing C522-11 (power turbine governor) control inner sleeve and D333-13 fitting to PTG input lever.

3. Remove fasteners securing control housing and AN742-4 clamps to F046-1 lower frame, as required.

4. Remove PTG per RR300 Series Operation and Maintenance Manual (OMM).

B. Installation

1. Install PTG per RR300 Series Operation and Maintenance Manual (OMM).

2. Perform PTG control rigging per Section 76-21.

76-21 PTG Control Rigging

1. Remove engine cowling assembly per Section 53-21. Detach center back rest assembly hook and loop tape (Velcro) at bottom; slide back rest assembly up and out of keyhole slots. Remove F474-2 middle seat cover (see Section 6-70).

2. Refer to Figure 76-2. Verify PTG input lever rigging angle is 93.0° ± 7.5°. As required, remove hardware securing serrated levers and reposition to proper angle. Install hardware, special torque nut per Section 20-33, and torque stripe per Figure 5-1.

3. Refer to Figure 76-3. Remove palnut and loosen nut securing A462-4 fitting and C522-11 (power turbine governor) control inner wire to F822-1 bellcrank assembly.

4. Position PTG pointer to indicate 45° on PTG protractor. Position aft end of control housing 1.44-1.50 inches from forward edge of D333-13 fitting and install fasteners securing housing and AN742-4 clamps to F046-1 lower frame.

5. Position forward end of control housing flush-0.25 inch at or below edge of bottom AN742-3 clamp and install fasteners securing housing and clamps to F381-6 bracket.

6. Turn BATTERY switch ON. With collective stick full down, “beep” collective toggle switch to full down. Turn BATTERY switch OFF.

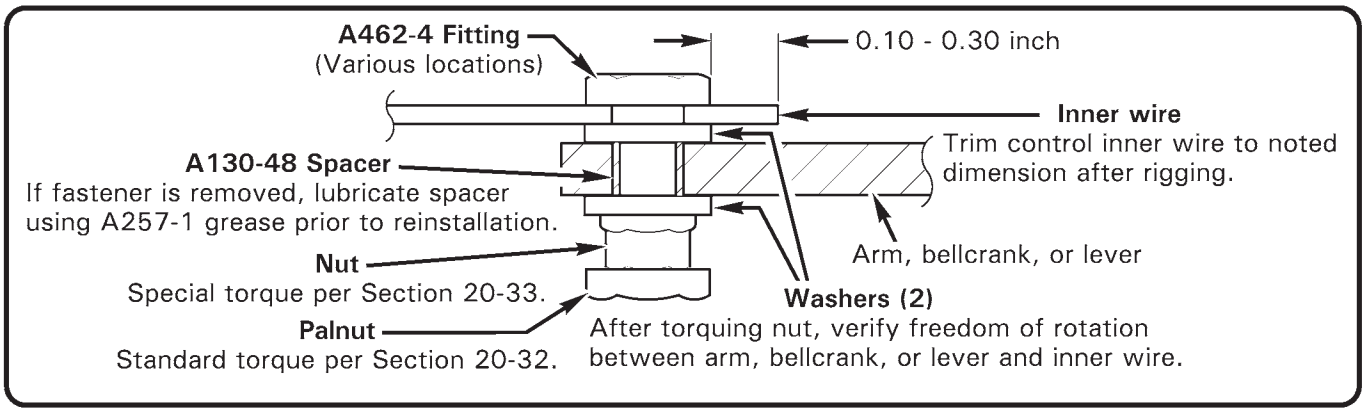

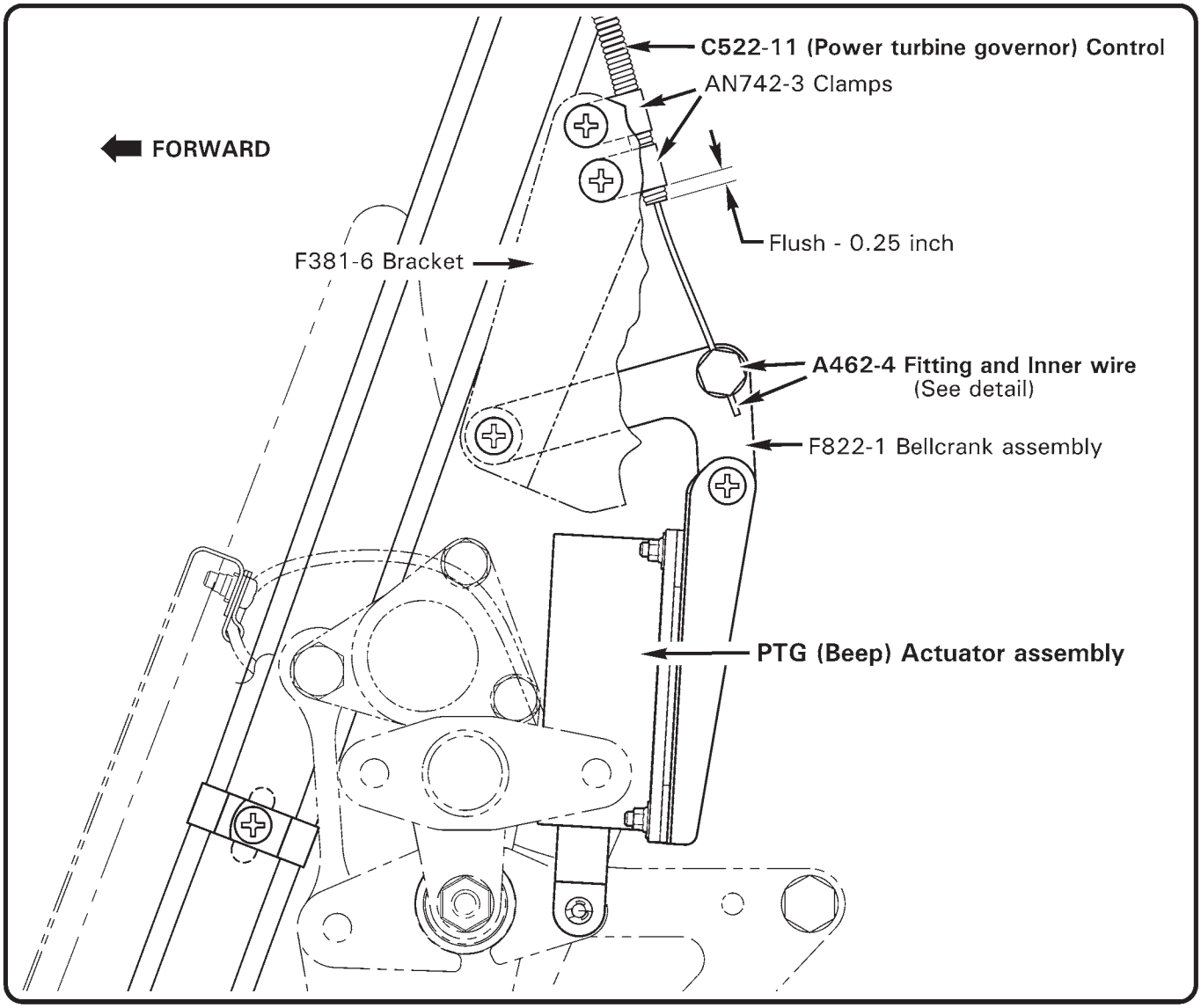

FIGURE 76-3 PTG (BEEP) ACTUATOR ASSEMBLY

76-21 PTG Control Rigging (continued)

7. Verify PTG pointer indicates 45° on PTG protractor, verify sufficient inner wire beyond bottom edge of bellcrank fitting, and special torque fitting nut per Section 20-33.
8. Install palnut, standard torque per Section 20-32, and torque stripe per Figure 5-1. Trim control wire 0.10-0.30 inch beyond bottom of fitting.
9. Perform PTG rigging check per Section 76-22.
10. Install engine cowling assembly per Section 53-21. Install middle seat cover. Install back rest assembly in keyhole slots and slide down; press firmly on back rest assembly hook and loop tape at bottom. Verify security.

76-22 PTG Rigging Check

1. Turn BATTERY switch ON.
2. Refer to Figure 76-2. With collective stick full down, “beep” collective toggle switch to full down. Verify PTG pointer indicates between 42.5° and 47.5° on PTG protractor. Turn BATTERY switch OFF.
3. Adjust PTG control rigging as required per Section 76-21; repeat previous steps until PTG is rigged for proper mechanical range.
4. Run-up helicopter per R66 Pilot's Operating Handbook, Section 4. Verify “beep” range is 97 to 103% rotor RPM with collective full down and twist grip open.
5. Adjust PTG control rigging as required per Section 76-21; repeat previous steps until PTG is rigged for proper operational range.

Intentionally Blank

CHAPTER 79

ENGINE OIL SYSTEM

Section	Title	Page
79-00	Description	79.1
79-10	Scroll and Fanwheel Assemblies	79.3
79-11	Fanwheel-to-Inlet Gaps	79.3
79-20	Oil Tank Assembly	79.5
79-21	Oil Temperature Sender	79.6
79-22	Sight Gage	79.7
79-30	Engine Oil Cooler	79.7
79-40	Engine Oil Filter	79.7
79-50	Engine Oil Line Assemblies and Fittings	79.8

Intentionally Blank

CHAPTER 79

ENGINE OIL SYSTEM

79-00 Description

The R66 helicopter has a dry-sump engine oil system. Oil is stored in a remote tank located in the main rotor gearbox compartment. Refer to Section 12-60 for oil servicing instructions. A Rolls-Royce-supplied oil temperature sender is mounted on the inboard side of the oil tank.

Oil circulates through the engine oil system via three oil delivery lines. Refer to Figure 79-1. Cool oil exits the oil tank and enters the engine, hot oil exits the engine and enters the engine oil cooler, and cooled oil exits the oil cooler and returns to the oil tank. An oil tank vent line is plumbed to the engine accessory gearbox, which is vented to the exhaust pipe.

The engine oil cooler has an internal thermostat and pressure relief valve. The thermostat maintains normal system operating pressure by allowing cool oil to bypass the heat exchanger and return to the oil tank. Higher than normal system pressure will open a pressure relief valve. When draining the oil system, residual oil is trapped in the bottom corner of the oil cooler due to the oil cooler installation angle in the R66. An oil cooler drain plug allows the technician to drain trapped oil during servicing.

The engine oil system includes an oil pump, oil filter and regulating valve, an oil sump tank, a check valve, and two magnetic plug inserts. Refer to RR300 OMM for a complete description of the engine oil system.

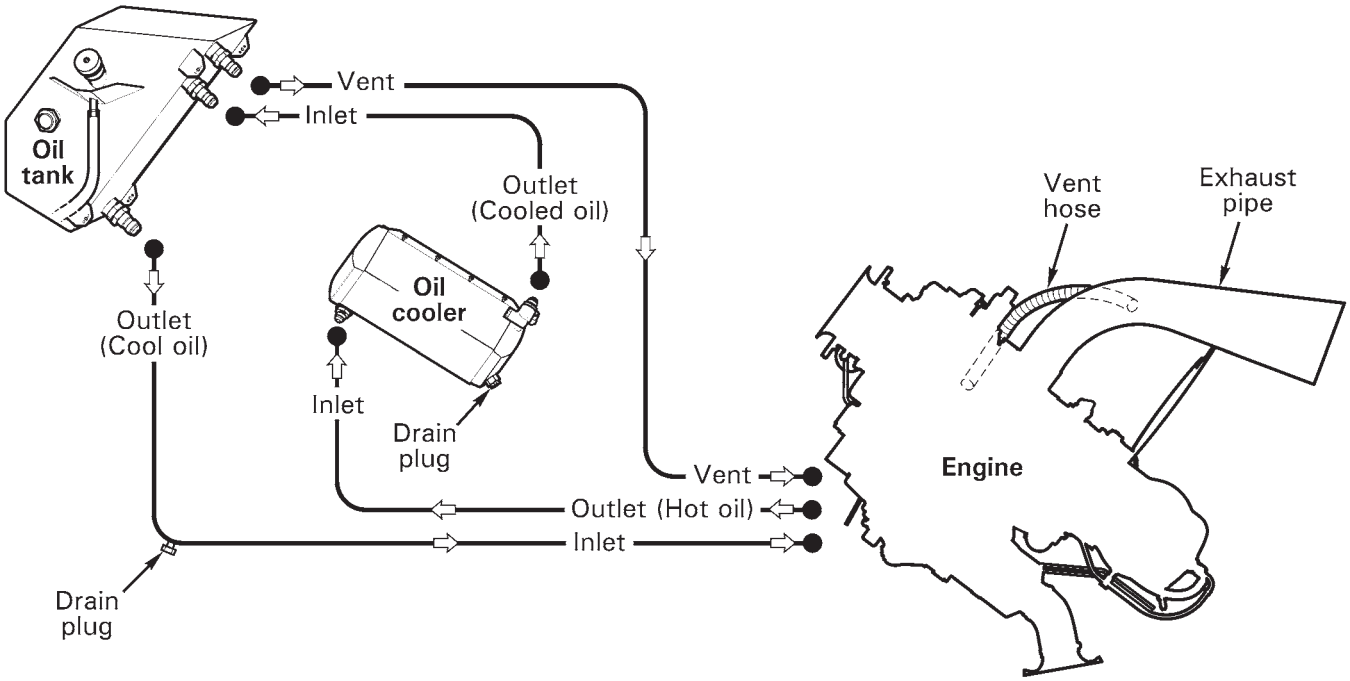

FIGURE 79-1 ENGINE OIL SYSTEM SCHEMATIC

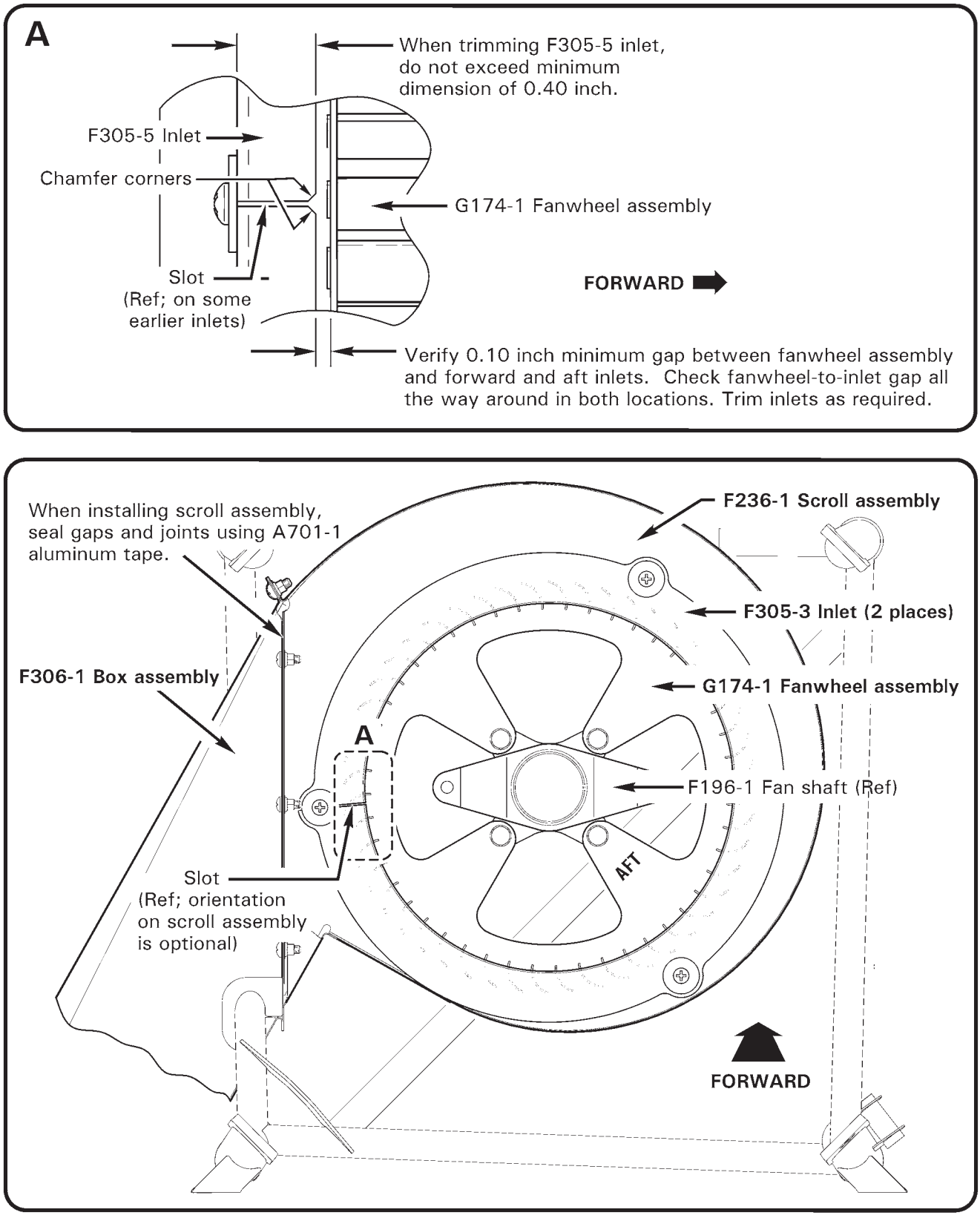

FIGURE 79-2 SCROLL AND FANWHEEL ASSEMBLIES

79-10 Scroll and Fanwheel Assemblies

A. Removal

1. Remove F196-1 fan shaft per § 65-10.
2. Refer to Figure 79-2. Remove perimeter screws securing F236-1 scroll assembly to F306-1 box assembly.
3. Remove aluminum tape sealing gaps & joints, or gently pull scroll away from box assembly and, using a scribe or similar sharp instrument, tear aluminum tape sealing gaps & joints. Remove scroll, with G174-1 fanwheel assembly inside, up through frame.
4. Remove hardware securing forward or aft F305-5 inlet to scroll; remove inlet & fanwheel. Remove damaged aluminum tape from scroll and box assembly.

B. Installation

1. Refer to Figure 79-2. Observing "AFT" orientation marking on fanwheel plate, place G174-1 fanwheel assembly inside F236-1 scroll assembly accordingly. Position F305-5 inlets on scroll and install hardware. Verify security.
2. Lower scroll, with fanwheel inside, through frame and install hardware securing scroll to F306-1 box assembly. Verify security. Seal gaps & joints using A701-1 aluminum tape.
3. Install F196-1 fan shaft per § 65-10.

79-11 Fanwheel-to-Inlet Gaps

A. Measuring Gap

1. Remove tailcone cowling assembly per § 53-23.
2. Refer to Figure 79-2. Verify 0.10 inch minimum gap between G174-1 fanwheel assembly and forward and aft F305-5 inlets. Check gap all the way around; rotate fanwheel and check gap again (several positions). If gap is within limits at forward and aft inlets, no further action is required.
3. Verify proper tail rotor driveline shimming per § 65-30.
4. Trim inlets as required per Part B.
5. Install tailcone cowling assembly per § 53-23.

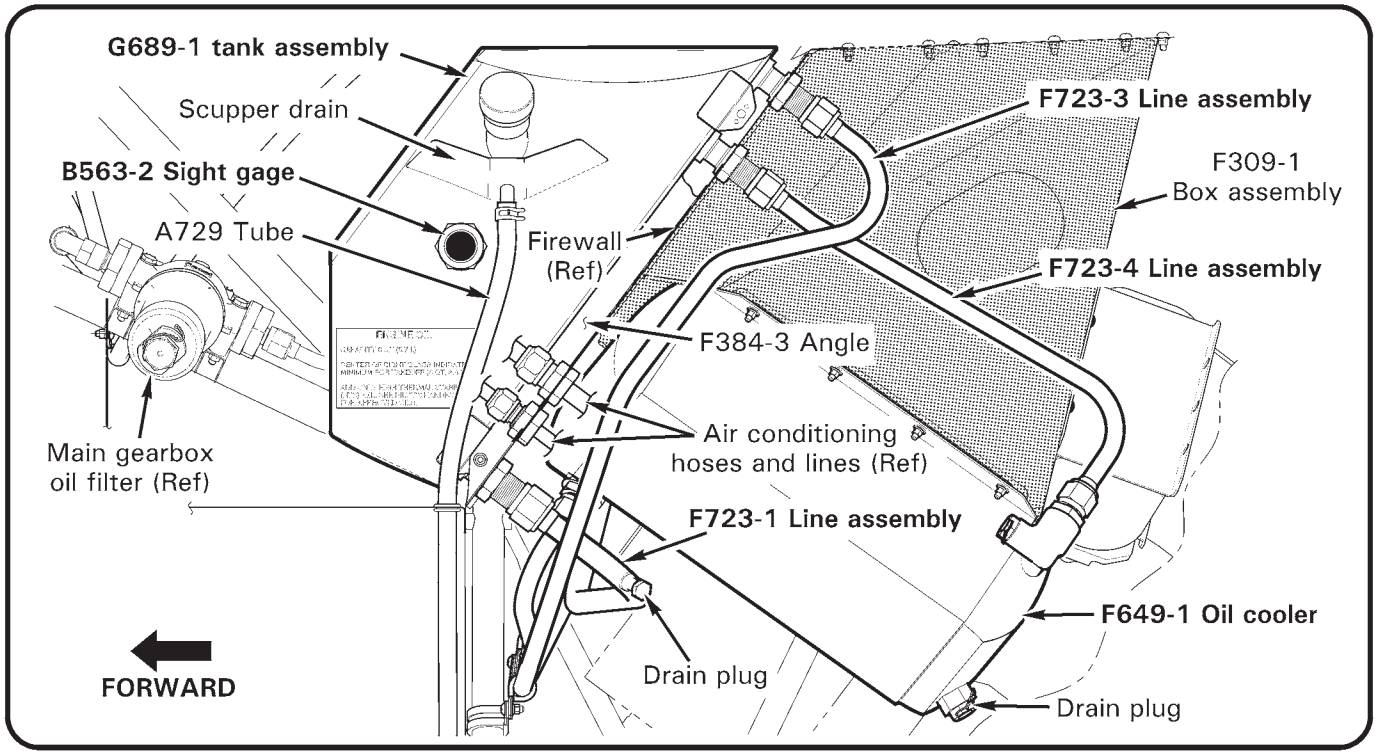

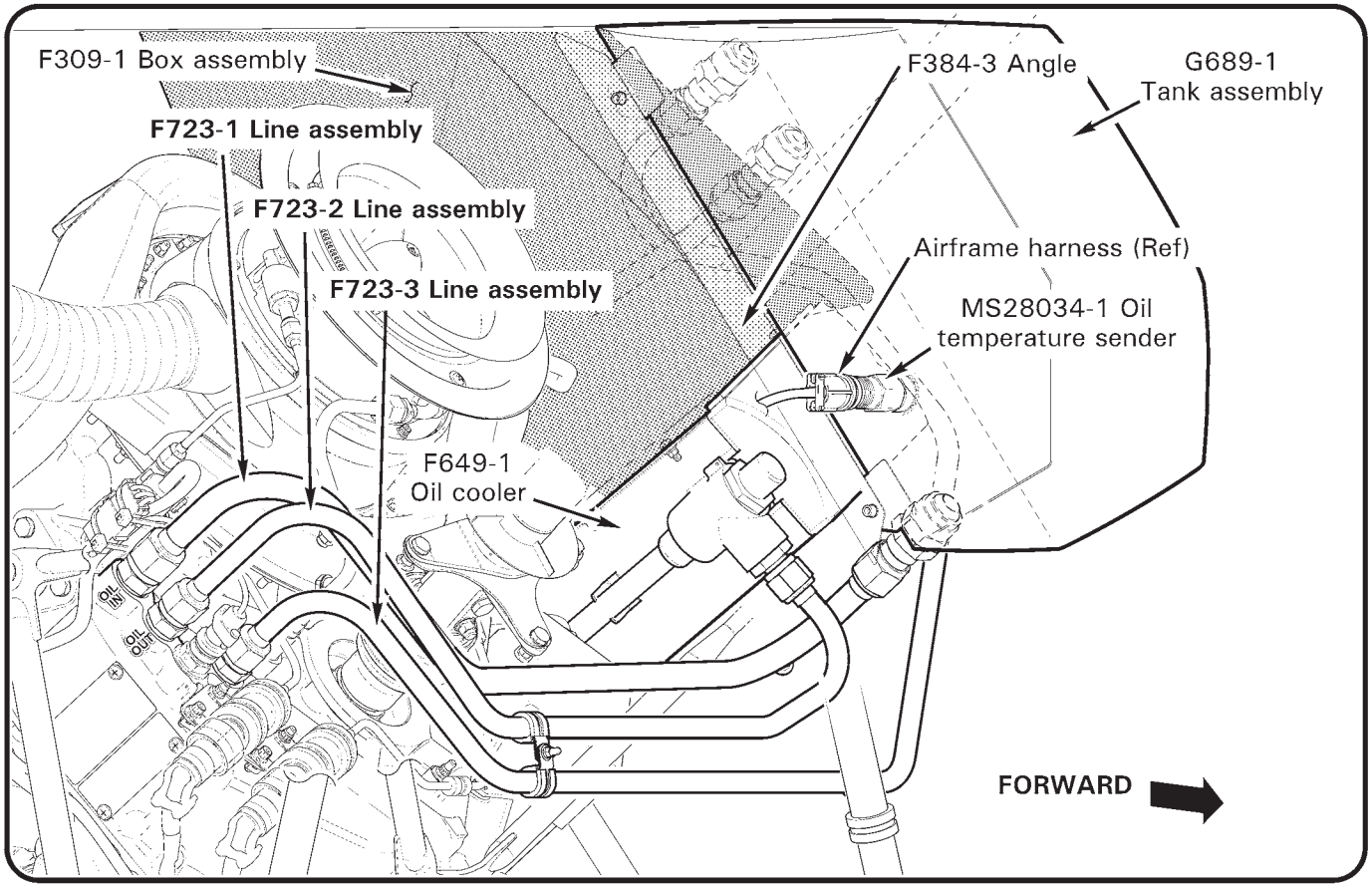

FIGURE 79-3 ENGINE OIL SYSTEM

79-11 Fanwheel-to-Inlet Gaps (continued)

B. Trimming Inlets

1. Refer to Figure 79-2. Remove hardware securing F305-5 inlets to F236-1 scroll assembly.
2. If inlets are slotted, carefully twist inlets over F196-1 fan shaft and remove inlets. If inlets are not slotted, remove hardware securing fan shaft to C947-3 plate assemblies, noting hardware removed, and remove inlets.
3. Refer to Figure 79-2, Detail A. Trim inlets as required to meet minimum fanwheel-to-inlet gap. Do not exceed minimum inlet dimensions.
4. Refer to § 20-70. Smooth inlet edges and coat bare metal with primer. Touch-up primed area using dark gray Dupont Imron polyurethane enamel in accordance with paint manufacturer's recommendations.
5. If inlets are slotted, carefully twist inlets over fan shaft and install hardware securing inlets to scroll assembly (slot orientation is optional). Verify security.
6. If inlets are not slotted, install inlets around fan shaft and install hardware securing inlets to scroll assembly. Verify security. Install hardware securing fan shaft to plate assemblies, standard torque hardware per § 20-32, and torque stripe per Figure 5-1.
7. Measure fanwheel-to-inlet gaps per Part A. Repeat procedure as required for minimum 0.10 inch gap at forward and aft inlets.

79-20 Oil Tank Assembly

A. Removal

1. Drain engine oil per § 12-60.
2. Remove tailcone cowling assembly per § 53-23; open main gearbox access door.
3. Air-conditioned ships: Recover refrigerant per § 12-81. Using backup wrench, disconnect G794-2 & G794-3 hose assemblies from G810-1 & G811-1 line assemblies; cap fittings.
4. Refer to Figure 79-3. Remove D277-8 clamp or cut and discard safety wire securing A729 tube to G689-1 tank assembly scupper drain. Pull tube off of drain.
5. Disconnect airframe harness from MS28034-1 oil temperature sender.
6. Disconnect F723-1, F723-3, and F723-4 line assemblies from oil tank and associate components; cap fittings.
7. Remove nuts securing tank to firewall.
8. Remove hardware securing tank to F384-3 angles and remove tank through access door.

79-20 Oil Tank Assembly (continued)

B. Installation

1. Torque check associated oil cooler and engine unions per § 20-33.
2. Refer to Figure 79-3. Position G689-1 tank assembly in helicopter and install hardware securing tank to F384-3 angles. Verify security.
3. Install nuts securing tank to firewall and special torque nuts per § 20-33.
4. Remove caps and connect F723-1, F723-3, and F723-4 line assemblies to tank and associate components. Using backup wrench, special torque line nuts per § 20-33.
5. Torque stripe fittings per Figure 5-1.
6. Connect airframe harness to MS28034-1 oil temperature sender. Verify security.
7. Secure A729 tube to tank scupper drain using D277-8 clamp; verify security.
8. Service engine oil per § 12-60.
9. Air-conditioned ships: Torque check nuts at firewall per § 20-33. Remove caps and connect G794-2 & G794-3 hose assemblies to G810-1 & G811-1 line assemblies. Using backup wrench, special torque hose nuts per § 20-33. Charge system per § 12-81.
10. Install tailcone cowling assembly per § 53-23.

79-21 Oil Temperature Sender

A. Removal

1. Drain engine oil per § 12-60.
2. Remove tailcone cowling assembly per § 53-23.
3. Refer to Figure 79-3. Disconnect airframe harness from MS28034-1 oil temperature sender.
4. Remove sender from G689-1 tank assembly; discard packing. Tape tank opening.

B. Installation

1. Refer to Figure 79-3. Install (new) packing on MS28034-1 oil temperature sender. Remove tape, install sender in G689-1 tank, and special torque sender per § 20-33.
2. Connect airframe harness to sender; verify security.
3. Service engine oil per § 12-60.
4. Install tailcone cowling assembly per § 53-23.

79-22 Sight Gage

A. Removal

1. Drain engine oil per § 12-60.
2. Refer to Figure 79-3. Remove B563-2 sight gage from G689-1 tank assembly. Discard o-ring; tape tank opening.

B. Installation

1. Refer to Figure 79-3. Remove tape and verify G689-1 tank assembly interior is free of contaminants.
2. Lubricate (new) o-ring using A257-18 lubricant. Install o-ring on B563-2 sight gage, and install gage in tank. Special torque gage per § 20-33.
3. Service engine oil per § 12-60.

79-30 Engine Oil Cooler

A. Removal

1. Drain engine oil per § 12-60.
2. Refer to Figure 79-3. Remove hardware securing F649-1 oil cooler to F309-1 box assembly.
3. Support oil cooler without damaging oil cooler fins. Disconnect F723-2 and F723-4 line assemblies from oil cooler and associated components; cap fittings.

B. Installation

1. Refer to Figure 79-3. Install hardware securing F649-1 oil cooler to F309-1 box assembly.
2. Torque check associated oil cooler and engine unions per § 20-33.
3. Remove caps and connect F723-2 and F723-4 line assemblies to oil cooler and associated components. Using backup wrench, special torque line nuts per § 20-33.
4. Torque stripe fittings per Figure 5-1.
5. Service engine oil per § 12-60.

79-40 Engine Oil Filter

Maintain engine's oil system per RR300 OMM.

NOTE

During engine oil filter servicing, if filter is contaminated, replace engine oil cooler and flush oil lines.

79-50 Engine Oil Line Assemblies and Fittings

A. Removal

1. Drain engine oil per § 12-60.
2. Refer to Figure 79-3. Remove hardware securing F723 line assembly clamps.
3. Disconnect line assembly from associated components; cap fittings. Remove line.

B. Installation

1. Refer to Figure 79-3. Torque check associated oil cooler and engine unions per § 20-33.
2. Remove caps and connect F723 line assembly to associated components. Using backup wrench, special torque line nuts per § 20-33.
3. Install hardware securing line assembly clamps. Verify security.
4. Torque stripe fittings per Figure 5-1.
5. Service engine oil per § 12-60.

CHAPTER 95

INSTRUMENT SYSTEM

Section	Title	Page
95-00	Description	95.1
95-10	Pitot-Static System	95.3
95-20	Primary Instruments	95.5
95-21	Vertical Speed Indicator	95.6
95-22	Airspeed Indicator	95.7
95-23	Engine (N_2) and Rotor Dual Tachometer	95.8
95-24	Altimeter	95.11
95-25	Torquemeter	95.12
95-26	Magnetic Compass	95.13
95-30	Engine Gages	95.14
95-31	N_1 Tachometer	95.14
95-32	Measured Gas (Turbine) Temperature (MGT) Gage	95.15
95-33	Engine Oil Pressure Gage	95.16
95-34	Engine Oil Temperature Gage	95.16
95-35	Fuel Quantity Gage	95.17
95-40	Additional Standard Indicating Equipment	95.18
95-41	Clock	95.18
95-42	Ammeter	95.19
95-43	Outside Air Temperature (OAT) Gage/Voltmeter	95.20
95-44	Hourmeters	95.21
95-50	[Reserved.]	
95-60	Instrument Markings	95.22
95-70	Electronic Flight Displays	95.25
95-71	Garmin GDU 620 Display Installation	95.25
95-72	Aspen EFD500H & EFD1000H Display(s) Installation	95.29

Intentionally Blank

CHAPTER 95

INSTRUMENT SYSTEM

95-00 Description

Standard primary instruments include an airspeed indicator, engine (N_2) and rotor dual tachometer, altimeter, torquemeter, and magnetic compass. Engine gages include an N_1 tachometer, measured gas (turbine) temperature, oil pressure, oil temperature, and fuel quantity. Also standard are a clock, an ammeter, a digital outside air temperature gage/voltmeter, and an hourmeter. An additional hourmeter is located outboard of the pilot's seat. Both hourmeters require main gearbox oil pressure to activate. The outboard hourmeter is collective activated and may be used to determine time in service.

For instrument panels with electronic flight displays, a P/N D327 light filter may be used to reduce reflections in the windshield at night. The light filter is installed by clipping it to the front of the display. Filter use is at pilot discretion.

The pitot-static system supplies air pressure to operate the airspeed indicator, altimeter, and vertical speed indicator. The pitot tube is located on the front edge of the mast fairing. The static sources are located on each side of the cabin, aft of the rear doors.

Water can be drained from pitot-static lines by removing the plastic drain plugs which are accessible through the aft inspection panel on the underside of the cabin. Draining lines should be required only if the airspeed indicator or altimeter appears erratic.

Pitot and static sources should be inspected frequently for bugs or other obstructions.

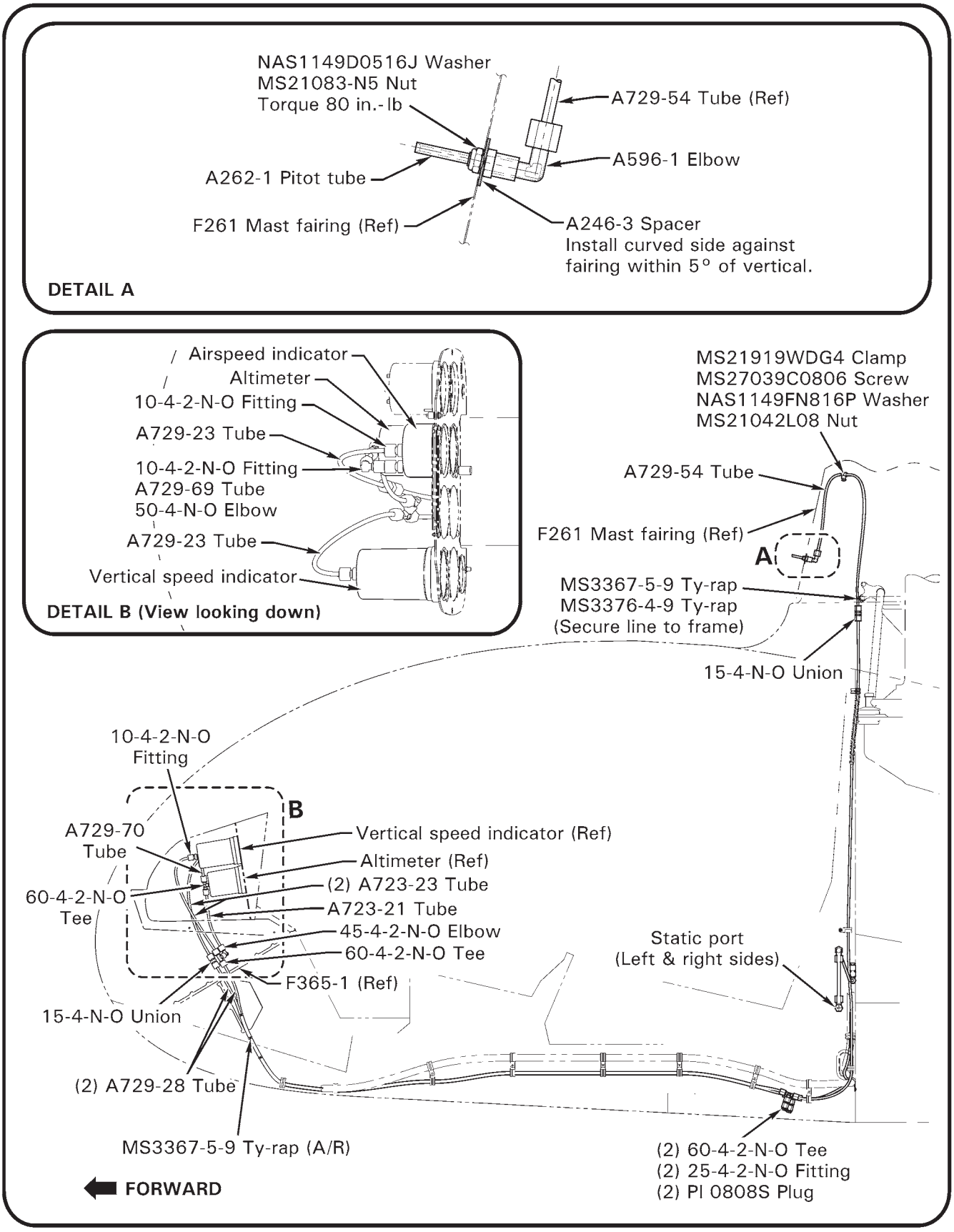

FIGURE 95-1 PITOT - STATIC SYSTEM INSTALLATION

95-10 Pitot-Static System

A. Pitot System Leak Test

CAUTION

Do not apply suction to pitot system or pressure to static system.

1. Open mast fairing per § 53-22.
2. Refer to Figures 95-1 and 95-2. Seal drain hole in elbow aft of pitot tube with pressure sensitive tape. Connect a medical syringe, with plunger withdrawn, to pitot tube via flexible tubing.
3. SLOWLY apply pressure to pitot line by depressing syringe plunger until airspeed indicator reads 70 knots. Release force on plunger; plunger will remain in place without need to pinch flexible tubing.
4. Gently tap airspeed indicator glass to remove friction effects.
5. If airspeed indication drops more than 10 knots in one minute, an unacceptable leak is indicated. SLOWLY release pressure. Locate and repair any leak(s). Retest after any repairs.
6. Remove tape from pitot tube drain hole and verify airspeed indicator has returned to zero.
7. Remove test equipment.

B. Static System Leak Test

CAUTION

Airspeed indicator, altimeter, and vertical speed indicator may be damaged if suction to static line is applied or removed rapidly.

1. Refer to Figures 95-1 and 95-2. Set altimeter to location elevation.
2. Temporarily seal left or right side static opening with pressure sensitive tape. Cover remaining static port with a suction cup attached to a medical syringe.
3. SLOWLY apply suction to static port by withdrawing syringe plunger until altimeter indicates 500 feet greater than location elevation. Release force on plunger, wait one minute, and note any change in altimeter indication.
4. Change of less than 100 feet indication in one minute is acceptable. SLOWLY remove suction from static port. Locate and repair leak(s) if altimeter indication changes 100 or more feet in one minute. Retest after any repairs.
5. Remove test equipment.

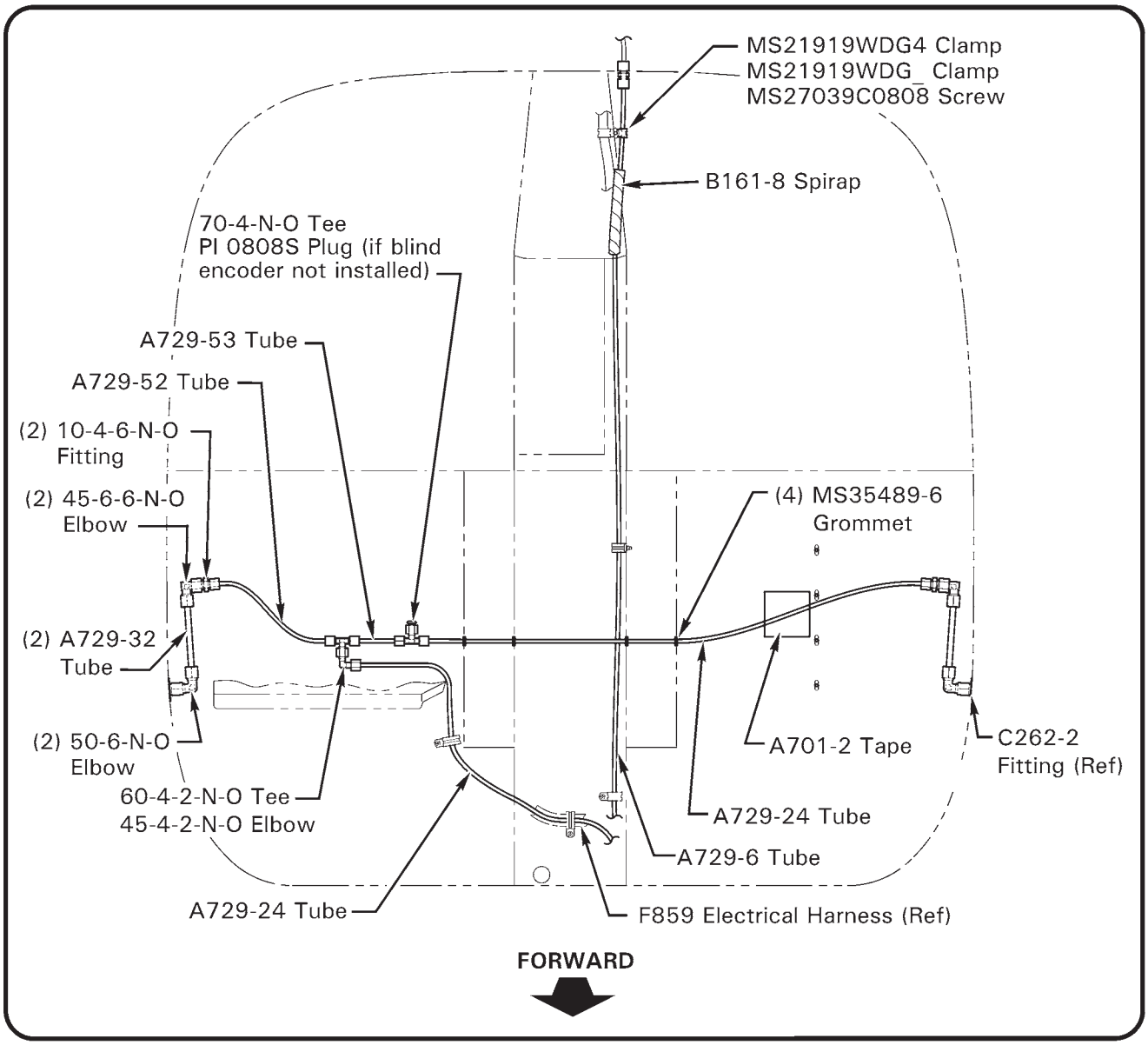

FIGURE 95-2 PITOT - STATIC SYSTEM INSTALLATION

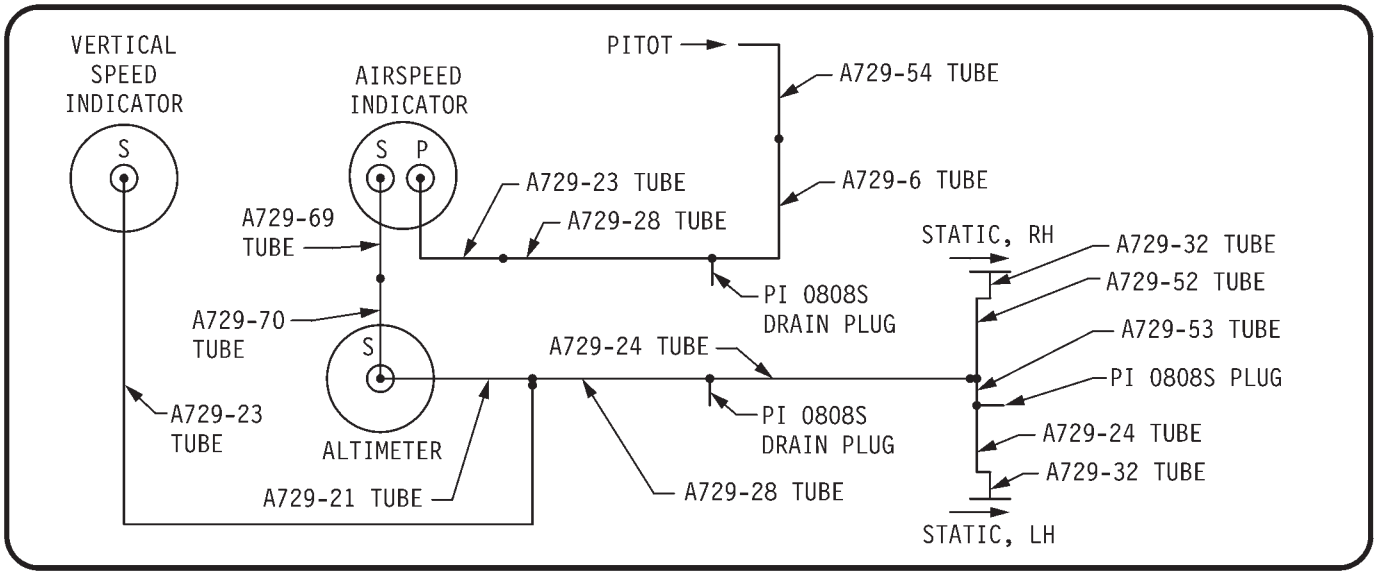

FIGURE 95-3 PITOT - STATIC SYSTEM SCHEMATIC

95-20 Primary Instruments

95-21 Vertical Speed Indicator

A. Description

The vertical speed indicator indicates rate of ascent or descent. Check vertical speed indicator for a zero-rate needle indication when rotorcraft is in a stationary hover.

B. Schematic

Refer to Figure 95-3 for pitot-static system schematic.

C. Removal

> **CAUTION**
>
> Protect instrumentation using foam padding or equivalent. Handle instruments like eggs.

1. Turn battery switch off and pull out applicable circuit breaker(s).
2. Remove perimeter screws securing face to console and pull face aft.
3. Remove screws securing instrument to face.
4. Disconnect wiring as applicable.
5. Disconnect pitot/static lines and cap & plug instrument and system fittings, as applicable.
6. Remove instrument and place on foam padding.

95-21 Vertical Speed Indicator (continued)

D. Installation

> **CAUTION**
>
> Protect instrumentation using foam padding or equivalent. Handle instruments like eggs.

1. Turn battery switch off and pull out applicable circuit breaker(s).
2. Remove caps and plugs and connect pitot/static lines. Verify security.
3. Connect wiring as applicable. Verify security.
4. Install screws securing instrument to face. Verify security.
5. Install perimeter screws securing face to console. Verify security.
6. Perform pitot-static system checks as required per § 95-10.
7. Perform appropriate function checks per § 5-40.

E. Scheduled Maintenance and Inspections

Refer to § 5-45 100-Hour/Annual Inspection.

F. Special Maintenance and Inspections

1. If vertical speed indicator displays climb indication but does not return to zero in level flight, or if indication is erratic:
   a. Inspect static system for water or obstructions, and remove water or obstructions if found.
   b. Perform pitot-static system checks as required per § 95-10.
2. Perform appropriate function checks per § 5-40. If vertical speed indicator still displays erratic indication, or displays no indication, remove indicator per Part C, and return to RHC for inspection.
3. Install airworthy indicator per Part D.

95-22 Airspeed Indicator

A. Description

The airspeed indicator displays airspeed in knots and miles or kilometers per hour. The airspeed indicator operates properly in forward flight only; backward or lateral flight will not indicate correct airspeed.

B. Schematic

Refer to Figure 95-3 for pitot-static system schematic.

C. Removal

Remove airspeed indicator per § 95-21 Part C.

D. Installation

Install airspeed indicator per § 95-21 Part D.

E. Scheduled Maintenance and Inspections

Refer to § 5-45 100-Hour/Annual Inspection.

F. Special Maintenance and Inspections

1. If airspeed indicator displays no indication:
   a. Inspect pitot tube for obstructions and remove obstructions if found.
   b. Inspect pitot tube connection, and tighten connection if loose.
   c. Open upper console and inspect pitot line for kinks or bends.
   d. Perform pitot-static system checks as required per § 95-10.
   e. Perform appropriate function checks per § 5-40. If indicator still displays no indication, remove indicator per Part C, and return to RHC for inspection.
   f. Install airworthy indicator per Part D.
2. If airspeed indicator displays erratic indication:
   a. Inspect pitot-static system connection(s), and tighten connection(s) if loose.
   b. Inspect pitot-static system lines and verify no lines are cracked or broken.
   c. Inspect pitot-static system for water, and remove water if found.
   d. Open upper console and inspect pitot lines for kinks or bends.
   e. Perform pitot-static system checks as required per § 95-10.
   f. Perform appropriate function checks per § 5-40. If indicator still displays erratic indication, remove indicator per Part C, and return to RHC for inspection.
   g. Install airworthy indicator per Part D.

95-23 Engine (N_2) and Rotor Dual Tachometer

A. Description

CAUTION

Installation of electrical devices can affect accuracy and reliability of electronic tachometers.

An electronic engine (N2) and rotor dual tachometer is standard. Engine tachometer signal is provided by a transducer on the engine gearbox. Rotor tachometer signal is provided by magnets on the main gearbox tail rotor driveline yoke. Each tachometer is on a separate circuit with its own circuit breaker.

The tachometer bus receives power from the avionics bus or through the battery relay bypass circuit as long as the main rotor gearbox has oil pressure. Therefore, the tachometers will receive power through the bypass circuit whenever the rotors are turning even if the avionics bus is not powered. The bypass circuit is disconnected from the tachometer bus when the annunciator test button is depressed. Pressing the test button while the helicopter is running will confirm that the tachometers are receiving power from the avionics bus.

NOTE

Do not use magnetized tools.

CAUTION

Protect instrumentation using foam padding or equivalent. Handle instruments like eggs.

B. Schematic

Refer to Figure 95-3 for pitot-static system schematic.

C. Removal

1. Turn battery switch off and pull out TACHS N_2 (2 amp) and R (2 amp) circuit breakers at panel.
2. Remove perimeter screws securing instrument face to console and pull face aft.
3. Remove screws securing console harness connector to F792-1 dual tachometer and unplug connector.
4. Supporting instrument, remove screws securing tachometer to face, and remove tachometer.

95-23 Engine (N_2) and Rotor Dual Tachometer (continued)

D. Installation

1. Turn battery switch off and pull out TACHS N_2 (2 amp) and R (2 amp) circuit breakers at panel.
2. Install screws securing F792-1 dual tachometer to instrument face. Verify security.
3. Plug in console harness connector to tachometer and install connector screws. Verify security.
4. Install perimeter screws securing face to console. Verify security.
5. Perform accuracy check and needle synchronization per Part E.

E. Accuracy Check and Needle Synchronization

> **CAUTION**
>
> Inadvertent engine overspeed can occur if accuracy check is not performed.

1. Perform PTG rigging check per § 76-22.
2. Install magnetic pickup (or photocell) portion of calibrated main rotor balancing equipment per § 18-11.
3. Push in TACHS N_2 (2 amp) and R (2 amp) circuit breakers at panel. Turn battery switch on, open throttle, and "beep" actuator to minimum (RPM) setting. Close throttle and turn battery switch off.
4. a. Start engine and run-up helicopter per R66 Pilot's Operating Handbook (POH) Section 4, establish stable idle, and record dual tachometer's % N_2 indication. Also record RPM displayed on balancer.

   b. Multiply dual tachometer's % N_2 indication (use 0.69 for 69%, 0.70 for 70%, etc.) by 408 RPM. Verify calculated RPM is within ± 8 RPM displayed on balancer.

   c. If calculated RPM is more than ± 8 RPM displayed on balancer, shut down helicopter per POH Section 4. Do not proceed further; contact RHC Technical Support.
5. Monitor RPM displayed on balancer and increase throttle to full open. Immediately close throttle and shut down helicopter per POH Section 4 if balancer indication exceeds 412 RPM.
6. Monitor RPM displayed on balancer and "beep" actuator until dual tachometer indicates 100% N_2. Verify RPM displayed on balancer is 408 ± 4 RPM; do not exceed 412 RPM.

95-23 Engine (N_2) and Rotor Dual Tachometer (continued)

E. Accuracy Check and Needle Synchronization (continued)

7. Verify dual tachometer's % NR indication is within 1% of % N_2 indication. If required, adjust % NR by turning screw on back of tachometer. Turning screw clockwise increases % NR and turning screw counterclockwise decrease % NR; one-half turn equals approximately 1% change. Adjusting screw is accessed by removing instrument face perimeter screws and pulling face aft.
8. Shut down helicopter per R66 POH Section 4.
9. Install perimeter screws securing face to console. Verify security.

F. Scheduled Maintenance and Inspections

Refer to § 5-45 100-Hour/Annual Inspection.

Refer to § 4-22 for recommended replacement time between overhauls.

G. Special Maintenance and Inspections

1. Perform accuracy check and needle synchronization per Part E.
2. If tachometer cannot be adjusted, remove tachometer per Part C, and return to RHC for inspection.
3. Install airworthy tachometer per Part D.

95-24 Altimeter

A. Description

The sensitive altimeter provides altitude information relative to mean sea level when the barometric pressure correction scale is properly set. Check altimeter calibration by setting correction scale to the current altimeter setting and checking the altimeter reading against field elevation; they must agree within 70 feet.

B. Schematic

Refer to Figure 95-3 for pitot-static system schematic.

C. Removal

Remove altimeter per § 95-21 Part C.

D. Installation

Install altimeter per § 95-21 Part D.

E. Scheduled Maintenance and Inspections

Refer to § 5-45 100-Hour/Annual Inspection.

F. Special Maintenance and Inspections

1. If altimeter displays no indication:
   a. Inspect static lines for obstructions and remove obstructions if found.
   b. Perform pitot-static system checks as required per § 95-10.
   c. Perform appropriate function checks per § 5-40. If altimeter still displays no indication, remove altimeter per Part C, and return to RHC for inspection.
   d. Install airworthy altimeter per Part D.
2. If altimeter displays erratic indication:
   a. Inspect static system for water, and remove water if found.
   b. Perform pitot-static system checks as required per § 95-10.
   c. Perform appropriate function checks per § 5-40. If altimeter still displays erratic indication, remove altimeter per Part C, and return to RHC for inspection.
   d. Install airworthy altimeter per Part D.

95-25 Torquemeter

A. Description

The electronic torquemeter indicates percent torque. The torque sensor is an oil pressure transducer mounted on the front of the engine's accessory gearbox.

B. Schematic

Refer to Figure 98-1 for electrical schematic.

C. Removal

Remove torquemeter per § 95-21 Part C.

D. Installation

Install torquemeter per § 95-21 Part D.

E. Scheduled Maintenance and Inspections

Refer to § 5-45 100-Hour/Annual Inspection.

F. Special Maintenance and Inspections

1. Inspect wiring for loose, chafed, frayed, or broken wires. Verify no damaged connectors. Verify wiring neatness, proper routing and installation, and security.
2. Perform appropriate function checks per § 5-40. If accuracy of torquemeter is suspected, remove torquemeter per Part C, and check calibration per Figure 95-3A.
3. Install airworthy torquemeter per Part D.

PIN	FUNCTION
1	SPARE
2	GND
3	CASE GND
4	SHIELD
5	SPARE
6	+POWER
7	+POWER
8	SIGNAL LO
9	SIGNAL HI

% TORQUE*	SIGNAL (VDC)*
0	0.480
20	0.914
40	1.347
60	1.781
80	2.214
83	2.279
100	2.648
120	3.081

* Accuracy is ± 0.5% at 20% and 100%; ± 2% elsewhere.

FIGURE 95-3A TORQUEMETER CALIBRATION CHECK

95-26 Magnetic Compass

A. Description

An internally illuminated, wet-type compass is attached to the center bow between the windshields above the instrument panel.

B. Schematic

Refer to Figure 98-1 for electrical schematic.

C. Removal

1. Remove hardware securing B339-2 mount to windshield bow.
2. Remove hardware securing B148-5 compass assembly to mount.
3. Remove heat shrink as required and disconnect light bar wires from airframe harness. Remove compass.

D. Installation

1. Install heat shrinks over wires and connect B148-5 compass assembly's light bar wires to airframe harness. Verify security. Activate heat shrinks.
2. Install hardware securing compass to B339-2 mount. Verify security.
3. Install hardware securing mount to windshield bow. Verify security.
4. Using the airport compass rose, align the helicopter skids on the rose lines, and record the indicated compass headings at 30° increments. Adjust compass compensator magnets as required until the maximum error at any heading is 5° or less with all avionics operating, all exterior lights on, and dimmer full bright. Record the final readings on the aircraft compass card. Re-check 4 cardinal headings with lights off and all avionics off except COM radio 1 and transponder. Verify maximum error remains 5° or less.

E. Scheduled Maintenance and Inspections

Refer to § 5-45 100-Hour/Annual Inspection.

F. Special Maintenance and Inspections

1. Perform compass deviation check per Part D step 4.
2. If compass cannot be adjusted to limits specified, remove compass per Part C, and install airworthy compass per Part D.

95-30 Engine Gages

95-31 N_1 Tachometer

A. Description

The electronic N_1 tachometer indicates percent RPM of the engine's gas producer section. The N_1 sensor is a sealed variable-reluctance, permanent-magnet device mounted atop the engine's accessory gearbox adjacent to the hoisting lug.

B. Schematic

Refer to Figure 98-1 for electrical schematic.

C. Removal

1. Turn battery switch off and pull out applicable circuit breaker(s).
2. Remove screws securing upper console to lower console and tilt upper console aft.
3. Loosen screws securing console wiring connector to G144-6 instrument cluster and disconnect wiring.
4. Remove screws securing instrument cluster to G051 shell assembly's face plate and remove instrument cluster.

D. Installation

1. Turn battery switch off and pull out applicable circuit breaker(s).
2. Remove screws securing upper console to lower console and tilt upper console aft.
3. Position G144-6 instrument cluster on G051 shell assembly's face plate and install screws. Verify security.
4. Connect console wiring connector to G144-6 instrument cluster tighten connector screws. Verify security.
5. Tilt console forward and install screws securing upper console to lower console. Verify security.
6. Perform appropriate function checks per § 5-40.

E. Scheduled Maintenance and Inspections

Refer to § 5-45 100-Hour/Annual Inspection.

95-31 N_1 Tachometer (continued)

F. Special Maintenance and Inspections

1. Inspect wiring for loose, chafed, frayed, or broken wires. Verify no damaged connectors. Verify wiring neatness, proper routing and installation, and security.
2. Perform appropriate function checks per § 5-40. If accuracy of engine gage is suspected, remove G144-6 instrument cluster per Part C, and return to RHC for inspection.
3. Install airworthy instrument cluster per Part D.

95-32 Measured Gas (Turbine) Temperature (MGT) Gage

A. Description

The measured gas temperature (MGT) gage connects to the engine's thermocouple harness via different size connectors to ensure correct polarity. Refer to RR300 Series Operation and Maintenance Manual (OMM) for periodic calibration requirements.

B. Schematic

Refer to Figure 98-1 for electrical schematic.

C. Removal

Remove G144-6 instrument cluster per § 95-31 Part C.

D. Installation

Install G144-6 instrument cluster per § 95-31 Part D.

E. Scheduled Maintenance and Inspections

Refer to § 5-45 100-Hour/Annual Inspection.

F. Special Maintenance and Inspections

Perform special maintenance and inspections per § 95-31 Part F.

95-33 Engine Oil Pressure Gage

A. Description

The engine oil pressure gage is electronic. The oil pressure sensor is a transducer mounted on the lower front of the engine's accessory gearbox.

B. Schematic

Refer to Figure 98-1 for electrical schematic.

C. Removal

Remove G144-6 instrument cluster per § 95-31 Part C.

D. Installation

Install G144-6 instrument cluster per § 95-31 Part D.

E. Scheduled Maintenance and Inspections

Refer to § 5-45 100-Hour/Annual Inspection.

F. Special Maintenance and Inspections

Perform special maintenance and inspections per § 95-31 Part F.

95-34 Engine Oil Temperature Gage

A. Description

The engine oil temperature gage is electronic. The oil temperature sensor is a transducer mounted on the inboard wall of the oil tank.

B. Schematic

Refer to Figure 98-1 for electrical schematic.

C. Removal

Remove G144-6 instrument cluster per § 95-31 Part C.

D. Installation

Install G144-6 instrument cluster per § 95-31 Part D.

E. Scheduled Maintenance and Inspections

Refer to § 5-45 100-Hour/Annual Inspection.

F. Special Maintenance and Inspections

Perform special maintenance and inspections per § 95-31 Part F.

95-35 Fuel Quantity Gage

A. Description

The electric fuel quantity gage indicates relative fuel quantity. The variable resistance sender is mounted near the fuel cap.

B. Schematic

Refer to Figure 98-1 for electrical schematic.

C. Removal

Remove G144-6 instrument cluster per § 95-31 Part C.

D. Installation

Install G144-6 instrument cluster per § 95-31 Part D.

E. Scheduled Maintenance and Inspections

Refer to § 5-45 100-Hour/Annual Inspection.

F. Special Maintenance and Inspections

Perform special maintenance and inspections per § 95-31 Part F.

95-40 Additional Standard Indicating Equipment

95-41 Clock

A. Description

A manually set electric analog clock is standard equipment; a digital clock is optional.

B. Schematic

Refer to Figure 98-1 for electrical schematic.

C. Removal

1. Remove perimeter screws securing face to console and pull face aft, or remove screws securing upper console to lower console and tilt upper console aft, as applicable.
2. Remove screws securing clock to face.
3. Disconnect console wiring from clock wiring at connectors, and remove clock.

D. Installation

1. Connect console wiring to clock wiring at connectors. Verify security.
2. Install screws securing clock to face. Verify security.
3. Install perimeter screws securing face to console and verify security, or tilt console forward and install screws securing upper console to lower console and verify security, as required.

E. Scheduled Maintenance and Inspections

Refer to § 5-45 100-Hour/Annual Inspection.

F. Special Maintenance and Inspections

1. Check AGC-3 (3 amp) fuse at firewall for evidence of melting and replace fuse as required.
2. Inspect wiring for loose, chafed, frayed, or broken wires. Verify no damaged connectors. Verify wiring neatness, proper routing and installation, and security.
3. If clock is still inoperative, remove clock per Part C, and install airworthy clock per Part D.

95-42 Ammeter

A. Description

The ammeter indicates electrical system loads. System load is measured across the A780-71 cable (shunt; cable is calibrated, do not alter cable) located between the starter/generator and relay on right side of engine compartment.

B. Schematic

Refer to Figure 98-1 for electrical schematic.

C. Removal

1. Remove perimeter screws securing face to console and pull face aft, or remove screws securing upper console to lower console and tilt upper console aft, as applicable.
2. Remove screws securing ammeter to face.
3. Disconnect console wiring from ammeter wiring at connectors, and remove ammeter.

D. Installation

1. Connect console wiring to ammeter wiring at connectors. Verify security.
2. Install screws securing ammeter to face. Verify security.
3. Install perimeter screws securing face to console and verify security, or tilt console forward and install screws securing upper console to lower console and verify security, as required.

E. Scheduled Maintenance and Inspections

Refer to § 5-45 100-Hour/Annual Inspection.

F. Special Maintenance and Inspections

1. Check continuity across two 3-amp fuses in B304-16 fuse assembly (in airframe harness on right side of engine compartment) and replace fuse assembly as required.
2. Inspect wiring for loose, chafed, frayed, or broken wires. Verify no damaged connectors. Verify wiring neatness, proper routing and installation, and security.
3. If ammeter is still inoperative, remove ammeter per Part C, and install airworthy ammeter per Part D.

95-43 Outside Air Temperature (OAT) Gage/Voltmeter

A. Description

> NOTE
>
> No cutting or splicing of OAT probe wires is permitted.

The outside air temperature gage is connected via a calibrated, twisted pair wiring harness to a stainless steel probe protruding from the chin.

B. Schematic

Refer to Figure 98-1 for electrical schematic.

C. Removal

1. Remove perimeter screws securing face to console and pull face aft, or remove screws securing upper console to lower console and tilt upper console aft, as applicable.
2. Remove screws securing OAT gage to face.
3. Disconnect console wiring from OAT gage wiring at connectors, and remove gage.

D. Installation

1. Connect console wiring to OAT gage wiring at connectors. Verify security.
2. Install screws securing OAT gage to face. Verify security.
3. Install perimeter screws securing face to console and verify security, or tilt console forward and install screws securing upper console to lower console and verify security, as required.

E. Scheduled Maintenance and Inspections

Refer to § 5-45 100-Hour/Annual Inspection.

F. Special Maintenance and Inspections

1. Inspect wiring for loose, chafed, frayed, or broken wires. Verify no damaged connectors. Verify wiring neatness, proper routing and installation, and security.
2. If OAT gage is still inoperative, remove OAT gage per Part C, and install airworthy OAT gage per Part D.

95-44 Hourmeters

A. Description

Two hourmeters are standard. One hourmeter is mounted above the ammeter and is activated by main gearbox oil pressure. Another hourmeter on the horizontal panel outboard of the pilot's seat is activated by a combination of main gearbox oil pressure and a raised collective and is approved for recording time in service.

B. Schematic

Refer to Figure 98-1 for electrical schematic.

C. Removal

Collective-Activated Hourmeter

1. Remove screws securing hourmeter, faceplate, and carpet to F353-2 panel.
2. Disconnect airframe wiring from hourmeter wiring at connectors, and remove hourmeter.

Console Hourmeter

1. Remove screws securing hourmeter to F640 face assembly, remove screws securing face to lower console, and supporting hourmeter, remove face.
2. Disconnect airframe wiring from hourmeter, and remove hourmeter.

D. Installation

Collective-Activated Hourmeter

1. Connect airframe wiring to hourmeter wiring at connectors. Verify security.
2. Install screws securing hourmeter, faceplate, and carpet to F353-2 panel. Verify security.

Console Hourmeter

1. Connect airframe wiring to hourmeter (F859-2053 to positive terminal). Verify security.
2. Install screws securing F640 face assembly to lower console. Install screws securing hourmeter to face. Verify security.

E. Scheduled Maintenance and Inspections

On condition.

F. Special Maintenance and Inspections

1. Inspect wiring for loose, chafed, frayed, or broken wires. Verify no damaged connectors. Verify wiring neatness, proper routing and installation, and security.
2. If hourmeter is still inoperative, remove hourmeter per Part C, and install airworthy hourmeter per Part D. Make appropriate maintenance record entries.

95-50 [Reserved.]

95-60 Instrument Markings

See R66 Pilot's Operating Handbook (POH) Section 2 for instrument markings.

Intentionally Blank

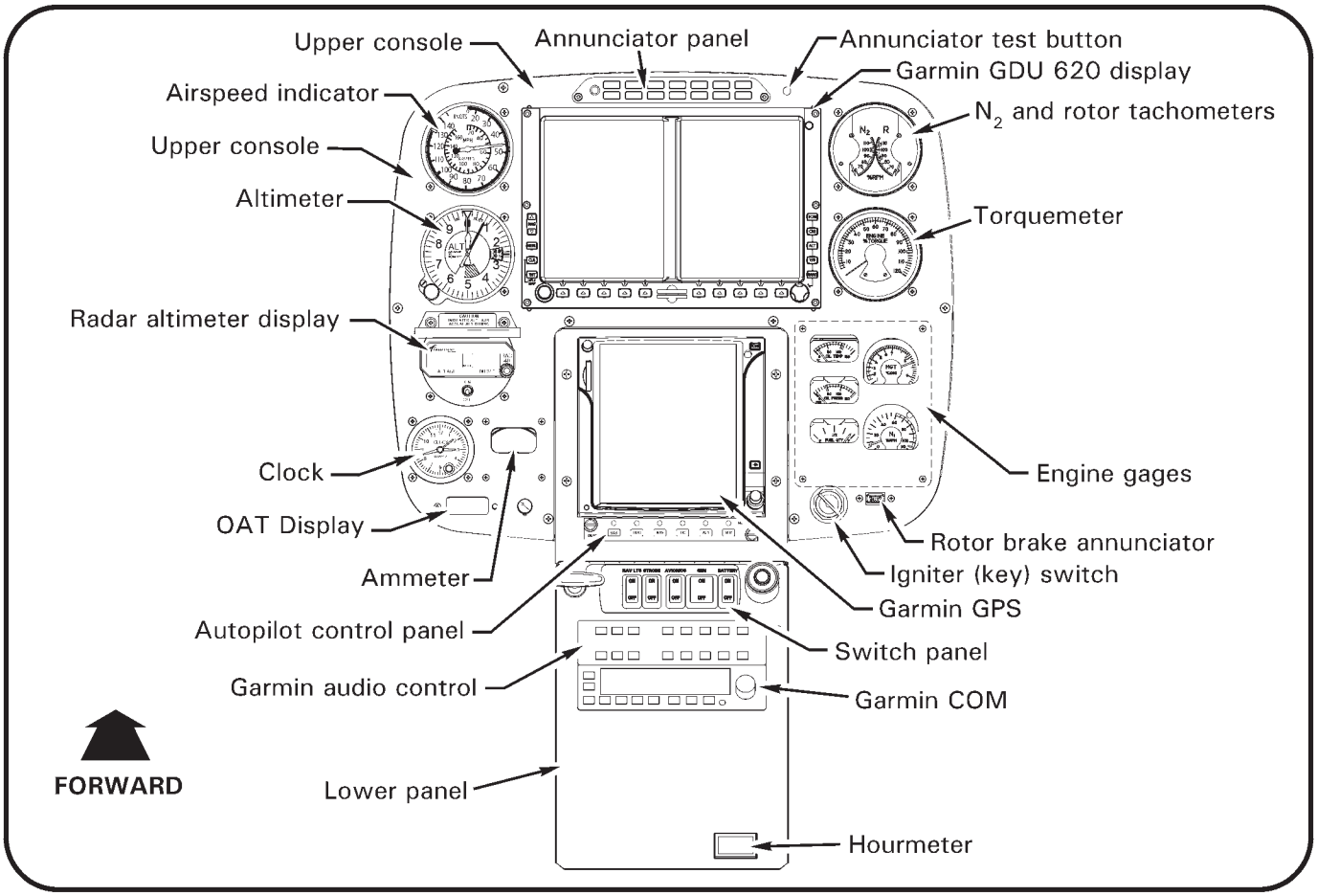

FIGURE 95-4 GARMIN G500H UPPER CONSOLE WITH GARMIN GDU 620 DISPLAY

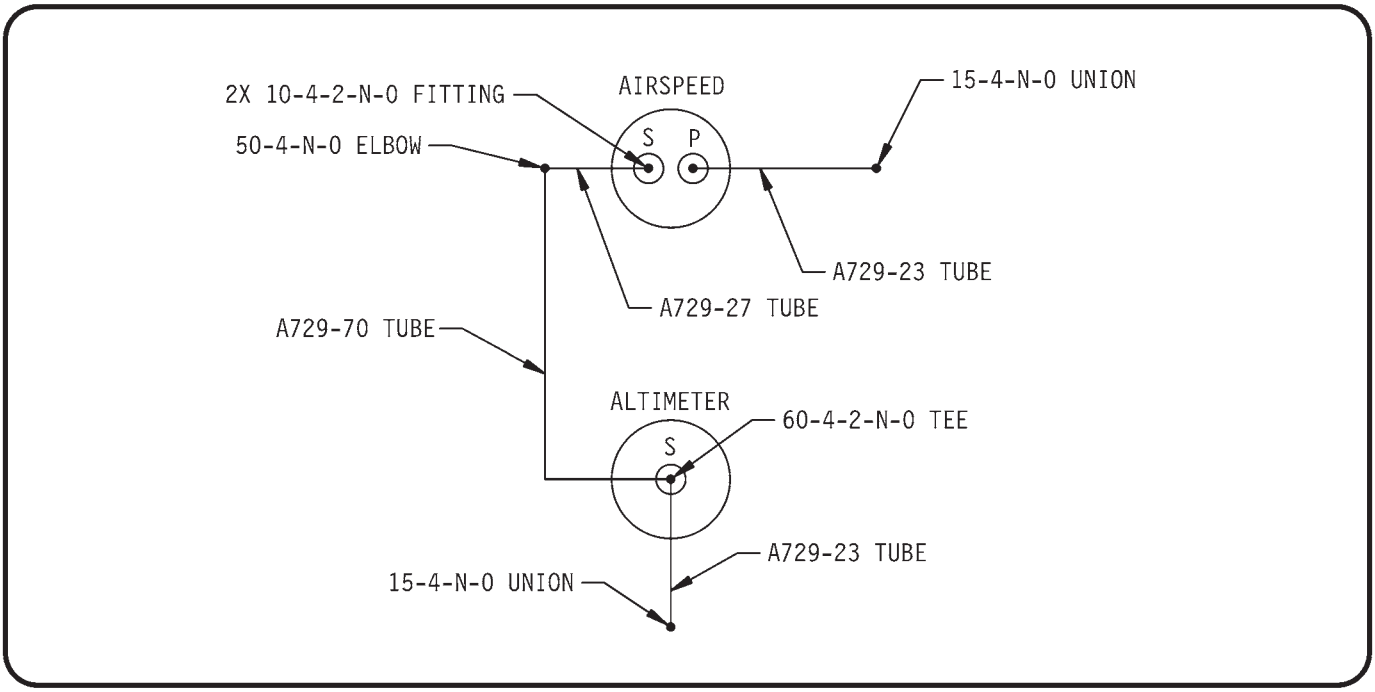

FIGURE 95-5 GARMIN G500H UPPER CONSOLE PITOT-STATIC SCHEMATIC

95-70 Electronic Flight Displays

95-71 Garmin GDU 620 Display Installation

NOTE

Refer to Garmin G500H Instructions for Continued Airworthiness.

A. Description

The Garmin G500H is an integrated avionics display system that provides flight instrument, moving-map navigation, and additional situational awareness information to the flight crew via the Garmin GDU 620 Display.

The Garmin GDU 620 Display has dual VGA (640 X 860 pixels) 6.5 inch LCD displays. The right side of the GDU 620 is the Primary Flight Display (PFD) and the left side is the Multifunction Display (MFD). The PFD displays airspeed, altitude, vertical speed, attitude, and heading information, and also provides a Horizontal Situation Indicator (HSI). The MFD typically displays moving-map navigation data, weather, traffic, and terrain.

Also refer to Chapter 97 for Garmin G500H EFIS system components.

B. Schematics

Refer to MM Figure 98-9 for Garmin GDU 620 Display Installation electrical schematic.

Refer to MM Figures 95-3 & 95-5 for Garmin G500H upper console pitot-static schematic.

C. Removal

1. Turn battery & avionics switches off and pull out EFIS circuit breaker (5 amp) at panel.
2. Remove screws securing Garmin GDU 620 display to console face.
3. Pull out and support display, unplug console harness connectors, and remove display.

D. Installation

1. Turn battery & avionics switches off and pull out EFIS circuit breaker (5 amp) at panel.
2. Visually inspect console harness connectors and verify no bent or damaged pins. Support display and plug in console harness connectors.
3. Place display in console, then install and tighten screws. Verify security.

95-71 Garmin GDU 620 Display Installation (continued)

D. Installation (continued)

4. Push in EFIS circuit breaker (5 amp) at panel. Turn battery & avionics switches on.

NOTE
System configuration and/or software loading may be required.

5. Perform appropriate functional checks per Garmin G500H Instructions for Continued Airworthiness. Turn battery & avionics switches off.

E. Scheduled Maintenance and Inspections

Refer to Garmin G500H Instructions for Continued Airworthiness.

F. Special Maintenance and Inspections

1. Turn battery & avionics switches off. Open circuit breaker panel and upper console.
2. Inspect condition of and verify no obvious damage to Garmin GDU 620, copper bus bars, circuit breaker, and wiring. Verify no loose, chafed, or broken wires or terminals. Verify no evidence of arcing. Verify equipment security.
3. Secure circuit breaker panel and upper console. Perform ground checks per Part D steps 4 and 5.

Intentionally Blank

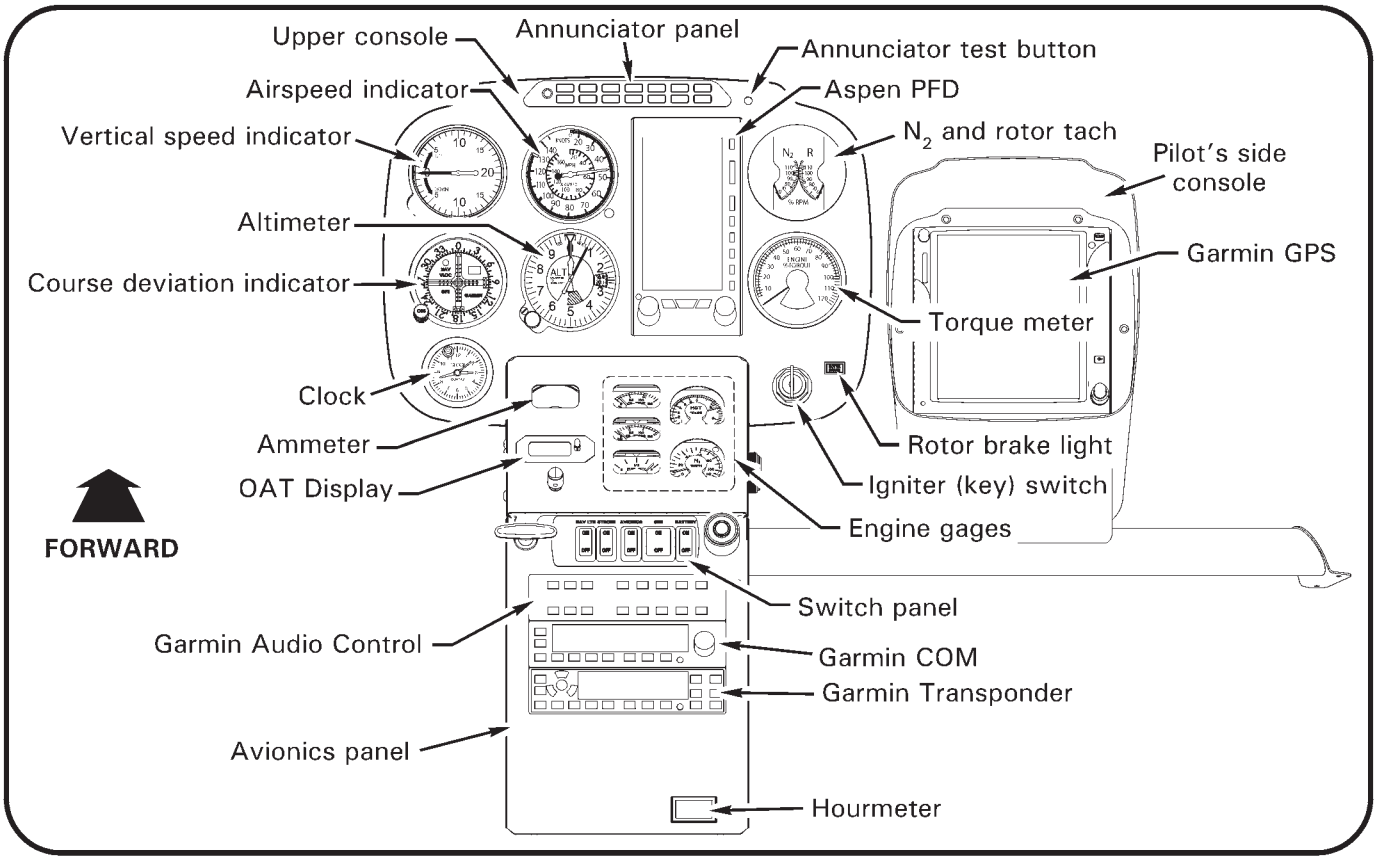

FIGURE 95-6 EIGHT-INSTRUMENT CONSOLE WITH ASPEN PFD

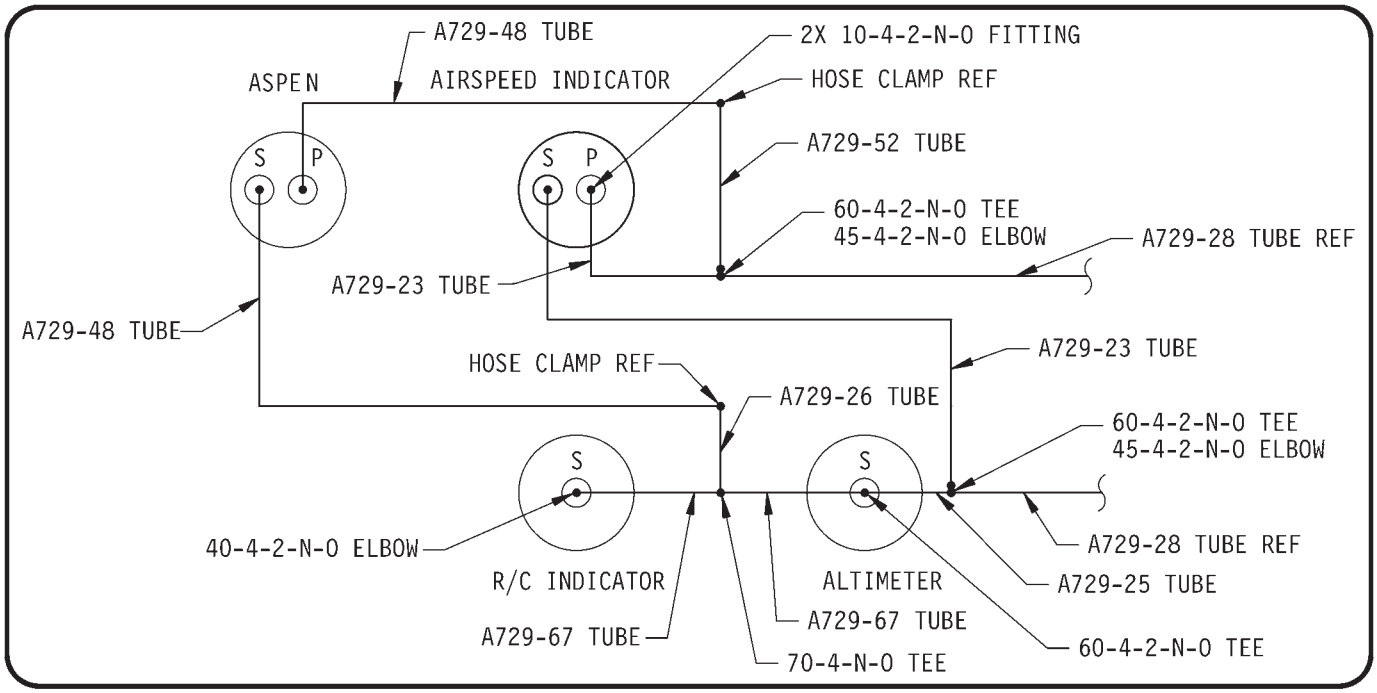

FIGURE 95-7 EIGHT-INSTRUMENT CONSOLE WITH ASPEN PFD PITOT-STATIC SCHEMATIC

95-72 Aspen EFD500H & EFD1000H Display(s) Installation

A. Description

R66 options include a single screen Aspen PFD, or a dual-screen Aspen PFD and MFD.

The Aspen PFD (Primary Flight Display) is an LCD unit with displays for attitude, altitude, airspeed, heading, and optional NAV (HSI/CDI). The Aspen PFD is a situational awareness aid, to be used in conjunction with required VFR instruments (altimeter, airspeed indicator, and magnetic compass).

The standard Aspen PFD installation configures the lower half of the display as a directional gyro. An optional installation configures the lower half of the display to a Horizontal Situation Indicator (HSI). Primary GPS position data is provided by GTN-series GPS. Heading and outside air temperature data is received from the Aspen remote sensor module (RSM). The RSM provides backup GPS position data if primary GPS fails.

The Aspen MFD (Multifunction Display) is an LCD unit with displays for moving map navigation data, terrain, and traffic. Terrain and traffic may also be overlaid on moving map. GPS position data is provided by Garmin GTN-series GPS for moving map and terrain displays. Aspen MFD also includes an internal terrain database. TIS-A traffic data may be received from Garmin GTX330 transponder for moving map display.

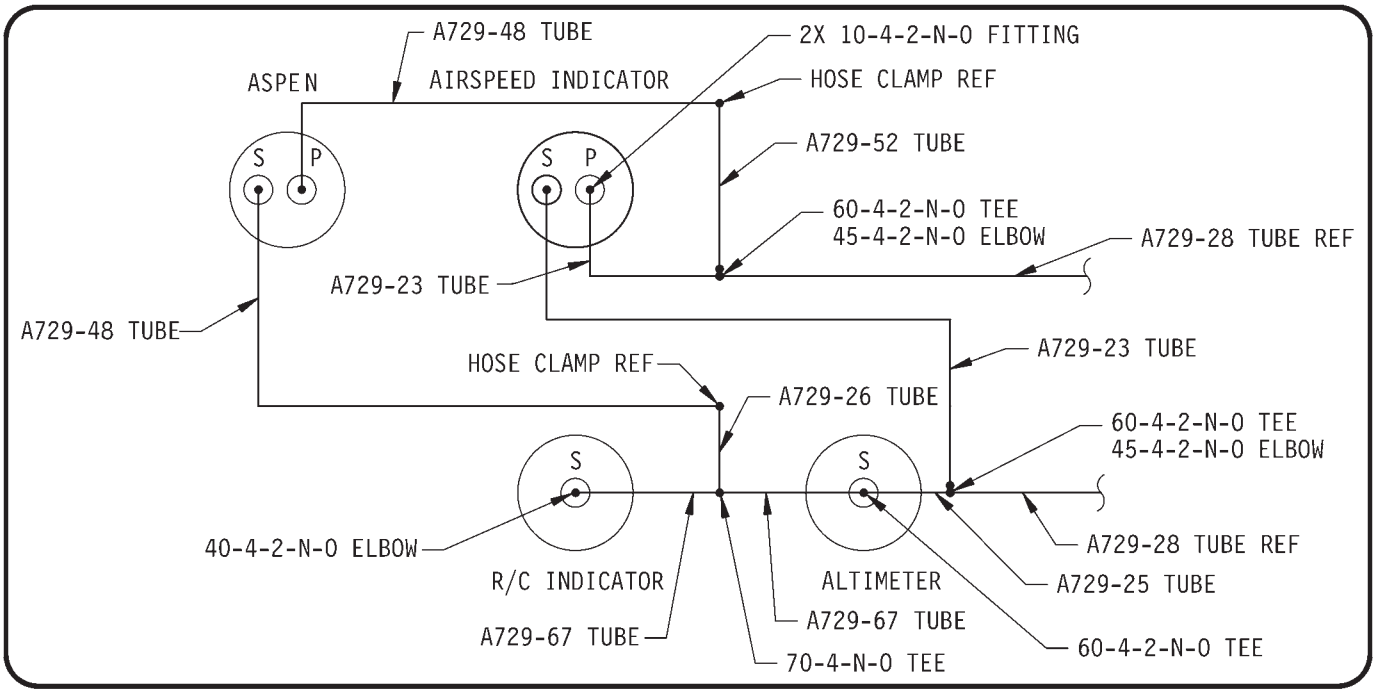

FIGURE 95-8 SIX-INSTRUMENT CONSOLE WITH ASPEN PFD PITOT-STATIC SCHEMATIC

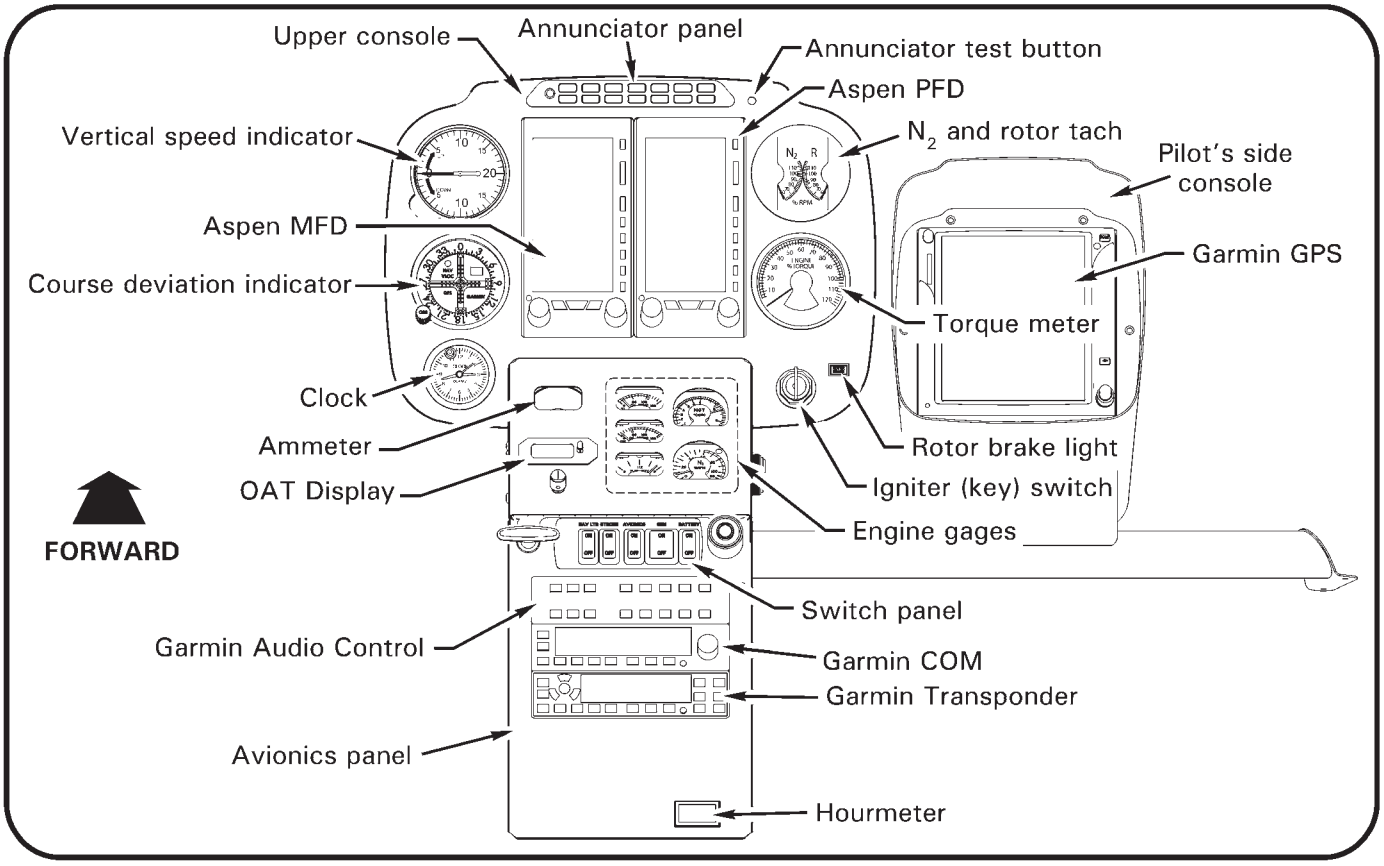

FIGURE 95-9 EIGHT-INSTRUMENT CONSOLE WITH ASPEN PFD AND MFD

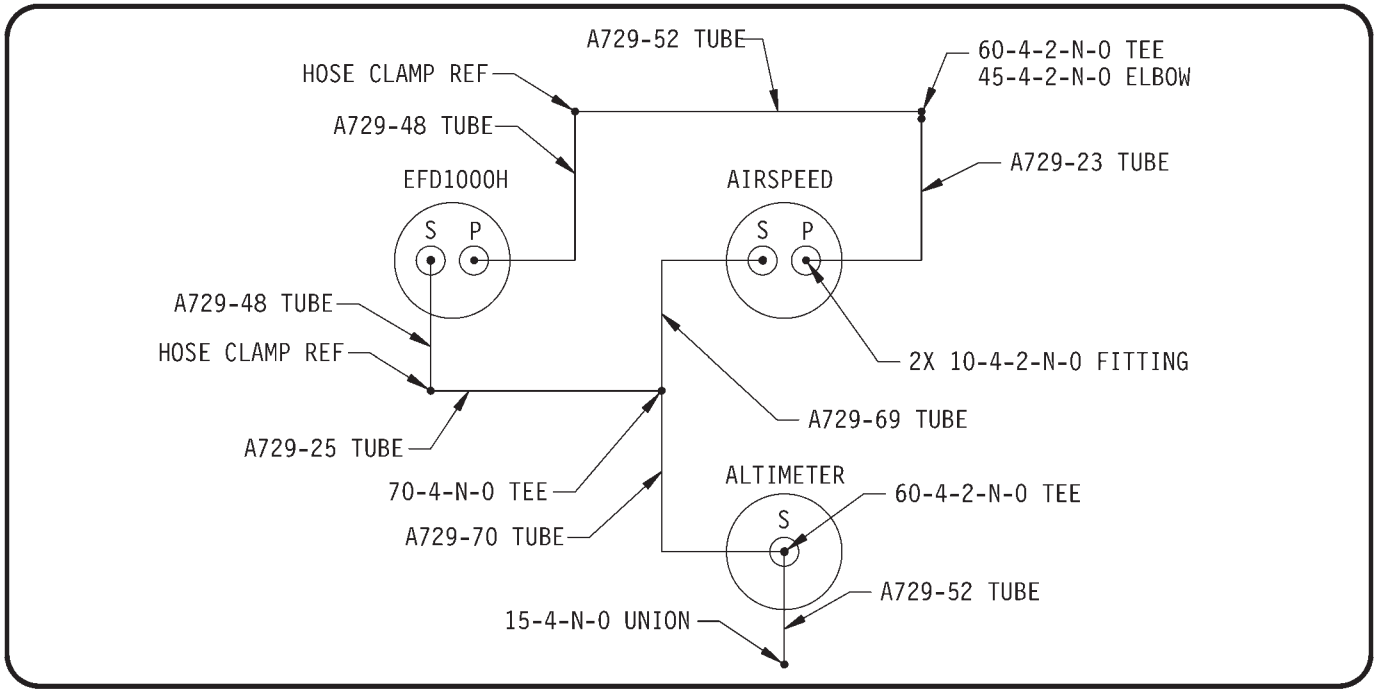

FIGURE 95-10 EIGHT-INSTRUMENT CONSOLE WITH ASPEN PFD AND MFD PITOT-STATIC SCHEMATIC

95-72 Aspen EFD500H & EFD1000H Display(s) Installation (continued)

B. Schematics

Refer to Figure 98-19 for Aspen EFD500H Display Installation electrical schematic, and Figure 98-18 for Aspen EFD1000H Display Installation electrical schematic.

Refer to Figures 95-3, 95-7, and 95-8 for Aspen PFD pitot-static schematic, and Figures 95-3 and 95-10 for Aspen MFD pitot-static schematic.

C. Removal

1. Turn battery switch off and pull-out EFIS circuit breaker (7.5 amp) at panel.
2. Gently depress blue tab(s) at top of Aspen PFD/MFD to release display(s) from mounting bracket(s).
3. PFD only: Disconnect pitot and static lines from display using quick-disconnect couplers. Temporarily cap pitot and static line fittings at display and in aircraft to prevent contamination.
4. Loosen screws securing airframe wiring harness connector(s) to display(s), unplug connector(s), and remove display(s).

D. Installation

1. Turn battery switch off and pull-out EFIS circuit breaker (7.5 amp) at panel.
2. Plug airframe wiring harness connector(s) into Aspen PFD/MFD display(s) and tighten screws. Verify security.
3. PFD only: Remove temporary fitting caps and connect pitot and static lines to display using quick-disconnect couplers.
4. Insert display(s) into mounting bracket(s) until blue tab(s) snap(s) into place. Verify security.
5. Push-in EFIS circuit breaker (7.5 amp) at panel. Turn battery & avionics switches on.
6. Perform appropriate functional checks per Aspen EFD1000H PFD / EFD500H MFD Pilot's Guide. Turn battery and avionics switches off.
7. Perform pitot-static leak check.

95-72 Aspen EFD500H & EFD1000H Display(s) Installation (continued)

E. Remote Sensor Module (RSM) Antenna

NOTE
Do not use magnetized tools.

Removal

1. Turn battery switch off and pull-out EFIS circuit breaker (7.5 amp) at panel.
2. Refer to § 6-80 for antenna locations. Using plastic scraper, remove B270-1 sealant from around EFIS antenna at corners where it attaches to tailcone.
3. Cut and discard ty-raps as required and disconnect antenna cable at connectors (secured to frame). Remove screws securing antenna and antenna ground wire to tailcone and remove antenna.

Installation

1. Turn battery switch off and pull-out EFIS circuit breaker (7.5 amp) at panel.
2. Remove paint & primer from antenna and antenna ground wire mating surfaces to ensure electrical ground.
3. Install screws securing antenna and antenna ground wire to tailcone. Verify security.
4. Apply small bead B270-1 sealant (0.1 inch max in height) around antenna at corners where it attaches to tailcone and allow to dry.
5. Connect antenna cable at connectors; secure to frame using ty-raps. Verify security.
6. Perform ground checks per Part D steps 5 and 6.

F. Scheduled Maintenance and Inspections

Maintenance is on condition. Contact Aspen Avionics at www.aspenavionics.com for instructions for continued airworthiness.

G. Special Maintenance and Inspections

1. Turn battery and avionics switches off. Open circuit breaker panel and upper console.
2. Inspect condition of and verify no obvious damage to Aspen displays, pitot-static lines, metal braiding, copper bus bars, circuit breaker, and wiring. Verify no loose, chafed, or broken wires or terminals. Verify no evidence of arcing. Verify equipment security.
3. Secure circuit breaker panel and upper console. Perform ground checks per Part D steps 5 and 6.

CHAPTER 96

ELECTRICAL SYSTEM

Section	Title	Page
96-00	Description	96.1
96-10	Battery	96.3
96-11	Lead-Acid Battery Installations	96.3
96-12	Lithium-Ion Battery Installation	96.7
96-20	External Power	96.9
96-30	Starter and Ignition System	96.9
96-40	Lighting System	96.10
96-50	Annunciator Panel	96.10
96-60	Low Rotor RPM Warning Unit Adjustment	96.12
96-70	Audio System	96.12
96-80	Engine Monitoring Unit (EMU)	96.13
96-90	Emergency Locator Transmitter (ELT)	96.14
96-100	Electrical Load Analysis	96.15

Intentionally Blank

CHAPTER 96

ELECTRICAL SYSTEM

96-00 Description

CAUTION

The installation of electrical devices can affect the accuracy and reliability of the electronic tachometer.

A 28-volt DC electrical system is standard. Primary system components are a sealed lead-acid battery, a starter-generator, and a generator control unit. The battery is located beneath the left front seat or in a compartment in the left side of the baggage compartment.

The circuit breaker panel is on the ledge just forward of the left front seat. Breakers are marked to indicate function and amperage and are of the push-to-reset type.

The battery switch controls the battery relay which connects the battery to the electrical system. A wire protected by a fuse near the battery bypasses the battery relay to allow the tachometers and clock to receive battery power with the battery switch OFF.

The avionics switch controls power to avionics. This allows avionics to be switched OFF via a single switch. Having sensitive electrical equipment off when the generator is switched ON protects against voltage spikes.

An ammeter indicates total generator output. A digital voltmeter which reads main bus voltage at the circuit breaker panel is incorporated as part of the OAT indicator. Normal indication is 27.3 to 28.7 volts with the generator ON.

A generator control unit (GCU) controls starter-generator function. Below 58 percent N_1 RPM, the GCU is in start mode regardless of generator switch position. Above 58 percent, the GCU automatically switches to generate mode. The generator switch should normally be off for starting to prevent applying generator load to the engine before reaching idle RPM.

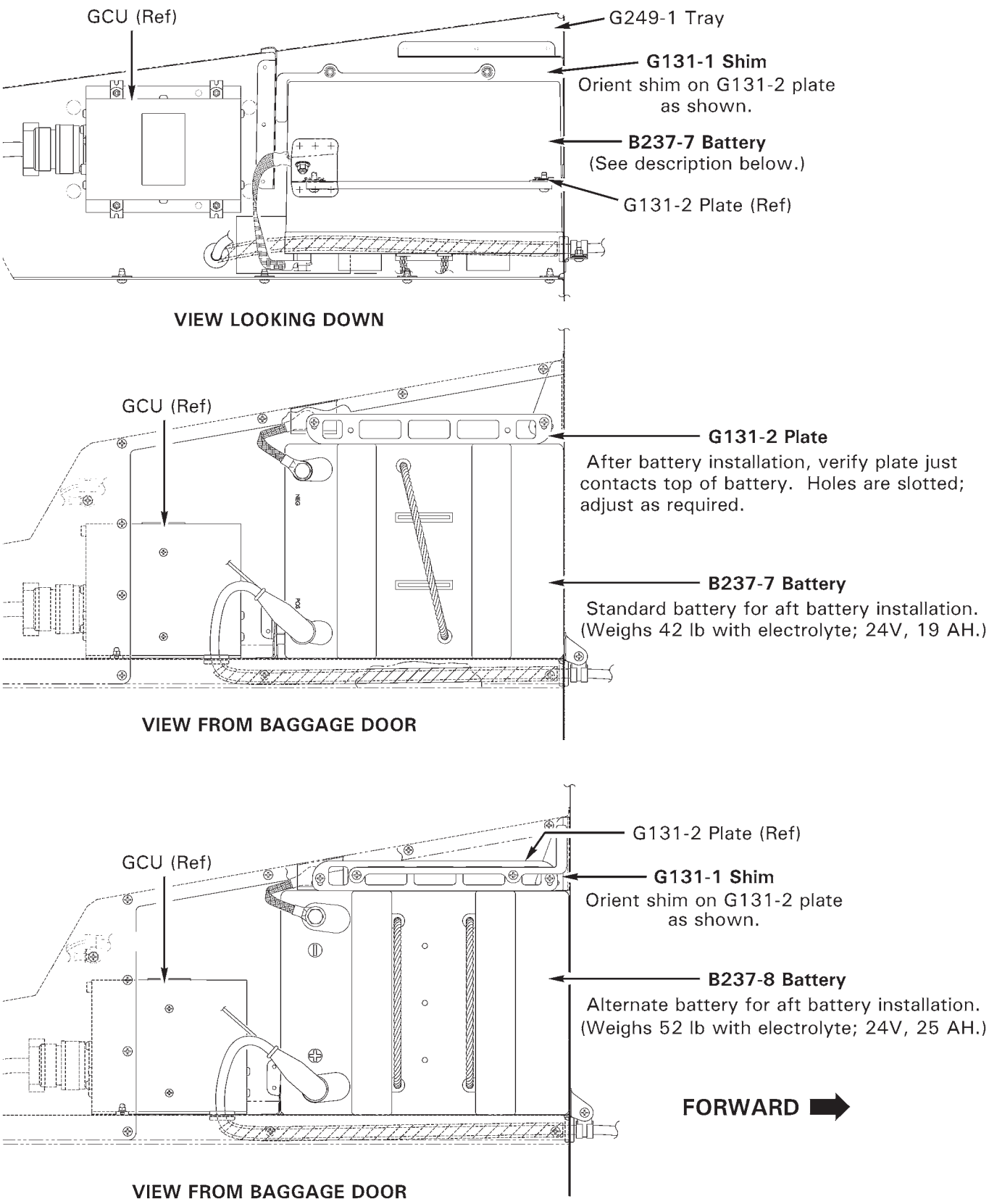

FIGURE 96-1 LEAD-ACID (AFT) BATTERY INSTALLATIONS

96-10 Battery

96-11 Lead-Acid Battery Installations

NOTE

Refer to Concorde Battery Corporation's Owner/Operator's Manual, and Instruction for Continued Airworthiness for battery maintenance procedures.

CAUTION

B237-7 battery (standard; forward and aft) weighs 42 lb and B237-8 battery (alternate; aft only) weighs 52 lb including electrolyte. Carefully remove/install battery using handle provided to prevent injury.

CAUTION

To minimize risk of electrical discharge: When disconnecting battery, disconnect negative (ground) cable from battery first, then the positive cable. When connecting battery, connect positive cable to battery first, then the negative (ground) cable.

A. Disconnecting and Removing Battery

1. Turn battery switch off. Refer to § 6-70. Open baggage compartment door. Remove hardware securing G248-1 (baggage compartment) cover assembly and remove cover.
2. Remove hardware securing negative (ground) cable to battery negative terminal.
3. Slide nipple away from battery positive terminal and remove hardware securing positive cable to battery positive terminal. Carefully remove battery.

B. Installing and Connecting Battery

1. Turn battery switch off.
2. Open baggage compartment door. Refer to Figure 96-1.
   a. If B237-7 battery was removed and B237-8 battery is being installed: Remove hardware securing G131-1 shim to G249-1 tray and remove shim. Install hardware securing shim to G131-2 plate as shown. Verify security. Carefully install B237-8 battery.
   b. If B237-8 battery was removed and B237-7 battery is being installed: Remove hardware securing G131-1 shim to G131-2 plate. Install hardware securing shim to G249-1 tray as shown. Verify security. Carefully install B237-7 battery.
   c. If the battery being installed is the same part number as the battery that was removed: Verify security, proper orientation, and installation of G131-1 shim and G131-2 plate. Carefully install battery.

96-11 Lead-Acid Battery Installations (continued)

B. Installing and Connecting Battery (continued)

3. Verify G131-2 plate just contacts top of battery (holes are slotted). Adjust as required.

4. Verify battery terminal surfaces are clean to ensure electrical conductivity. Install positive cable on battery positive terminal and install battery hardware. Special torque terminal bolt as noted on battery label, and torque stripe per Figure 5-1. Slide nipple over terminal.

5. Install negative (ground) cable to battery negative terminal and install battery hardware. Special torque terminal bolt as noted on battery label, and torque stripe per Figure 5-1.

6. Refer to § 6-70. Install G248-1 (baggage compartment) cover, and install hardware. Verify security. Close and latch baggage compartment door.

7. a. If B237-7 battery was removed and B237-8 battery was just installed, revise Weight and Balance Record in R66 Pilot's Operating Handbook (POH) Section 6 to incorporate the following data:

Subtract:

Item	Weight	Long. Arm	Long. Moment	Lat. Arm	Lat. Moment
B237-7 Battery	42.00 lb	96.88 in.	4068.96 in.-lb	-20.87 in.	-876.54 in.-lb

Add:

Item	Weight	Long. Arm	Long. Moment	Lat. Arm	Lat. Moment
B237-8 Battery	52.00 lb	96.88 in.	5037.76 in.-lb	-21.73 in.	-1129.96 in.-lb

b. If B237-8 battery was removed and B237-7 battery was just installed, revise Weight and Balance Record in R66 Pilot's Operating Handbook (POH) Section 6 to incorporate the following data:

Subtract:

Item	Weight	Long. Arm	Long. Moment	Lat. Arm	Lat. Moment
B237-8 Battery	52.00 lb	96.88 in.	5037.76 in.-lb	-21.73 in.	-1129.96 in.-lb

Add:

Item	Weight	Long. Arm	Long. Moment	Lat. Arm	Lat. Moment
B237-7 Battery	42.00 lb	96.88 in.	4068.96 in.-lb	-20.87 in.	-876.54 in.-lb

Intentionally Blank

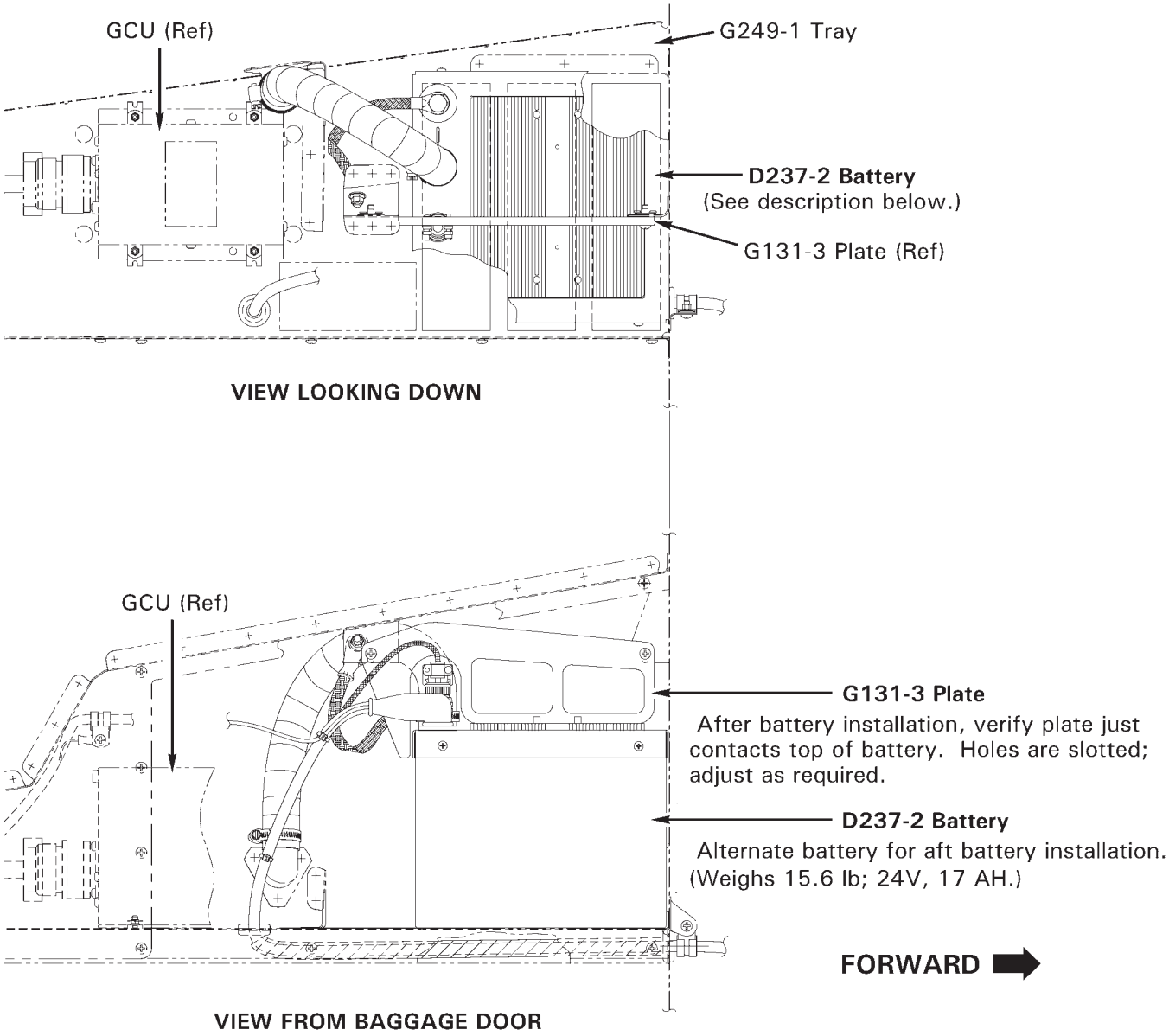

FIGURE 96-2 LITHIUM-ION BATTERY INSTALLATION

96-12 Lithium-Ion Battery Installation

A. Description

The True Blue Power (a division of Mid-Continent Instrument Company) TB17 Lithium-ion battery is a 24-volt, 17 amp-hour battery, and weighs 15.6 lb.

In addition to significant weight savings (the R66 standard lead-acid battery weighs 42 lb), lithium batteries feature improved starter performance as well as cooler starts.

A dedicated vent line ensures proper venting of toxic or flammable gases in the unlikely event of a battery internal failure.

A 7-pin "comm" connector sends signals to the console indicator lights. In cold weather, a heater light may illuminate when the battery is switched on, indicating that the lithium battery's internal battery is automatically warming the battery cells to an optimal starting temperature. It is recommended that the heater light is extinguished prior to attempting an engine start.

The battery's internal circuitry is self-monitoring and will switch itself off when it reaches a certain low state of charge (SOC). In that event, two commercial, non-rechargeable, 9-volt batteries mounted under the co-pilot's seat will supply backup power to the EMU and MGT gage. Though not critical for flight safety, power to these units ensures the recording of a gas temperature exceedence were one to occur during engine start.

NOTE

Refer to True Blue Power Installation Manual and Operating Instructions for battery maintenance procedures.

CAUTION

To minimize risk of electrical discharge: When disconnecting battery, disconnect negative (ground) cable from battery first, then the positive cable. When connecting battery, connect positive cable to battery first, then the negative (ground) cable.

B. Disconnecting and Removing Battery

1. Remove auxiliary fuel tank per § 28-51, if installed.
2. Turn battery switch off. Open baggage compartment door.
3. Refer to § 6-70. Remove hardware securing G248-1 (baggage compartment) cover assembly and remove cover.
4. Loosen clamp securing vent hose to battery and pull hose off of battery.
5. Disconnect airframe wiring plug from battery's comm connector.
6. Remove hardware securing negative (ground) cable to battery negative terminal.
7. Slide nipple away from battery positive terminal and remove hardware securing positive cable to battery positive terminal. Carefully remove battery.

96-12 Lithium-Ion Battery Installation (continued)

C. Installing and Connecting Battery

1. Remove auxiliary fuel tank per § 28-51, if installed.
2. Perform pre-installation inspection and completely charge battery per True Blue Power Installation Manual and Operating Instructions. If battery is new, also perform visual inspection, charging, capacity check, and return to service per True Blue Power Installation Manual and Operating Instructions.
3. Turn battery switch off. Open baggage compartment door.
4. Refer to Figure 96-2. Verify security, proper orientation, and installation of G131-3 plate. Carefully install battery.
5. Verify G131-3 plate just contacts top of battery (holes are slotted). Adjust as required.
6. Verify battery terminal surfaces are clean to ensure electrical conductivity. Install positive cable on battery positive terminal and install battery hardware. Special torque terminal bolt as noted on battery label, and torque stripe per Figure 5-1. Slide nipple over terminal.
7. Install negative (ground) cable to battery negative terminal and install battery hardware. Special torque terminal bolt as noted on battery label, and torque stripe per Figure 5-1.
8. Refer to § 6-70. Install G248-1 (baggage compartment) cover assembly, and install hardware. Verify security. Close and latch baggage compartment door.

D. Scheduled Maintenance and Inspections

Every 6 Months: If battery is unused for more than 6 months, either installed in helicopter or in storage, completely charge battery per True Blue Power Installation Manual and Operating Instructions.

Every Annual Inspection: Replace two, non-rechargeable, 9-volt batteries mounted under the co-pilot's seat every annual inspection.

Every 24 Months: Perform visual inspection, charging, capacity check, and return to service per True Blue Power Installation Manual and Operating Instructions every 24 months from date of aircraft delivery or subsequent new battery installation.

96-12 Lithium-Ion Battery Installation (continued)

E. Special Maintenance and Inspections

No other battery maintenance other than routine maintenance specified by True Blue Power is permitted.

Operators are encouraged to review important safety information regarding handling, shipping, storage instructions, estimated unit life, and disposal instructions provided in True Blue Power Installation Manual and Operating Instructions.

Note: In accordance with industry and regulatory standards, the TB17 Lithium-ion battery will be shipped with a state of charge (SOC) not to exceed 30% of rated capacity.

96-20 External Power

A 28-volt MS3506-compatible external power receptacle is located inside the right engine cowl door. When the battery is switched ON, the external power relay and the battery relay both close, connecting external power to the aircraft electrical system and battery The external power relay will not close if reverse polarity is provided to the receptacle.

A separate wire from the external power receptacle to the battery bypasses the external power and battery relays. This wire allows battery charging via the external receptacle with the battery switch OFF. A 10-amp circuit breaker at the receptacle opens if current exceeds normal charging levels, and a diode provides polarity protection.

96-30 Starter and Ignition System

A single starter-generator is used for engine starting and electrical power generation. A generator control unit (GCU) controls starter-generator function. During a start, the GCU latches the starter on until N_1 reaches 58 percent RPM. Therefore, the pilot is not required to hold the start button down throughout the start sequence. Above 58 percent N_1 RPM, the GCU automatically switches out of start mode, but the generator switch should not be switched ON until idle RPM stabilizes to prevent the generator load from bringing the RPM down.

When the igniter key switch is in the enable position, depressing the start button causes a normal start sequence with the starter latching on and the igniter firing. Above 58 percent N_1 RPM, the igniter will fire while the start button is depressed.

When the igniter switch is OFF, the engine can be motored by the starter by depressing the start button without the starter latching or the igniter firing. This is useful for performing a compressor wash or rinse. If the igniter is switched OFF during a start, the starter will disengage. If the igniter is switched OFF while the engine is running, the engine will continue to run; however, this is not recommended.

NOTE

Start button is active when battery switch is ON, even if igniter switch is OFF. Rotor brake may be left engaged after shutdown to disable start button.

96-40 Lighting System

A red anti-collision light is installed on the tailcone and is controlled by the strobe switch on the instrument console. Position lights are installed on each side of the cabin and in the tail and are controlled by the nav lights switch. A light at the top of the windshield and post lights illuminate the instrument panel. Panel lighting is active when the nav lights switch is ON and lighting is dimmed via the knob above the nav lights switch. An overhead map light mounted on a swivel is controlled by an adjacent switch with high and low settings. The map light may be used for emergency lighting of the instrument panel. An additional cabin light with an adjacent switch is located just aft of the map light. The map and cabin lights are not connected to the dimmer circuit.

Two long-life, high intensity discharge (HID) landing lights are installed in the nose. One wide-angle and one narrow-beam light are used to increase lighted area. The landing light switch is located on the cyclic center post.

NOTE

Continuous operation of landing and position lights in flight is recommended to promote collision avoidance.

An optional flashing light may be mounted on the tailcone in addition to the standard anti-collision light. The optional light is controlled by an additional position on the strobe switch and may be turned on or off anytime at pilot discretion.

96-50 Annunciator Panel

The annunciator panel consists of illuminated segments located at the top of the main instrument panel. If a caution or warning condition occurs, the appropriate segment(s) illuminate indicating the nature of the problem.

The CHIP segments are illuminated by magnetic chip devices in each gearbox which collect metallic particles in order to complete an electric circuit. The engine gearbox has two magnetic chip detectors, either of which can illuminate the ENGINE CHIP segment.

The MR TEMP/PRESS segment is illuminated by either the temperature switch or oil pressure switch at the main gearbox. The ENGINE FIRE segment is illuminated by a temperature switch in the engine compartment. The ENGINE OIL segment is activated by a pressure switch which is independent of the oil pressure sender. The ANTI-ICE segment illuminates via a pressure switch in the engine anti-ice air line. The GEN segment illuminates when the generator is disconnected from the main electrical bus.

The LOW FUEL segment is illuminated by a float switch in the tank which is independent of the fuel quantity sender. The FUEL FILTER segment illuminates when a pressure switch detects excessive pressure drop across the fuel filter. The LOW RPM segment is illuminated by a sensor measuring driveline speed at the aft end of the main gearbox. A horn sounds simultaneously with illumination of the LOW RPM segment when rotor speed is below 95% RPM. The horn is disabled when the collective is fully down.

96-50 Annunciator Panel (continued)

A. Description

The COWL DOOR segment is illuminated when the fuel filler cowl door, the right engine cowl door (which accesses the external power receptacle), or the baggage door is not closed. The AIR FILTER segment illuminates when pressure drop across the filter opens bypass doors, allowing unfiltered air to the engine. The EMU (Engine Monitoring Unit) segment indicates the EMU status with either steady, flashing, or no illumination. The EMU segment will illuminate only when the test button is depressed.

A push-to-test button on the instrument panel should cause all segments on the annunciator panel, as well as the ROTOR BRAKE light, to illuminate when depressed. The LOW FUEL segment takes approximately two seconds before it illuminates due to a time delay in the circuit (time delay prevents sloshing fuel from giving a false indication.) The EMU segment takes approximately ten seconds to perform a self-test after the battery is switched ON before it will illuminate. The test button may be used on the ground or in flight to verify all circuits are functioning.

B. Troubleshooting

1. Turn battery switch off. Access EMU behind right, aft seatback assembly.
2. Disconnect EMU from airframe electrical harness.
3. Using an insulated jumper, connect airframe wire -2044 (pin 13 on airframe connector to EMU) to a convenient airframe ground.
4. Turn battery switch on. Depress push-to-test switch adjacent to annunciator panel and observe EMU annunciator segment response:
   a. If EMU annunciator segment illuminates: Turn battery switch off and disconnect jumper. Replace EMU per § 71-43.
   b. If EMU annunciator segment remains extinguished: Turn battery switch off and disconnect jumper. Proceed to step 5.
5. Turn battery switch on. Depress push-to-test switch and verify system voltage at wire -2044 (pin 13 on EMU airframe connector). Turn battery switch off. If there is no system voltage at wire -2044, disconnect F695-4 tester assembly from airframe electrical harness. Using an insulated jumper, connect airframe wire -2062 (pin 38 on airframe connector to F695-4/F694-1 circuit board) to a convenient airframe ground.
6. Turn battery switch on. Depress push-to-test switch adjacent to annunciator panel and observe EMU annunciator segment response:
   a. If EMU annunciator segment illuminates: Turn battery switch off and disconnect jumper. Replace F695-4 tester.
   b. If EMU annunciator segment remains extinguished: Turn battery switch off and disconnect jumper. Proceed to step 7.

96-50 Annunciator Panel (continued)

B. Troubleshooting (continued)

7. Either an open circuit exists along wire -2062 between F695-1 tester and G198-1 annunciator, or G198-1 annunciator panel is faulty. Troubleshoot beginning with Console Connector 1 ("C1"), pin 34 and verifying security of pins on both halves of connector. If no fault is found in connector, verify continuity of wire -2062 at all connections. If no fault is detected in wire -2062 circuit, replace G198-1 annunciator panel.

96-60 Low Rotor RPM Warning Unit Adjustment

The low rotor RPM warning unit is located inside the upper console, mounted to the left vertical panel. Two magnets attached to the main gearbox tail rotor driveline output yoke provide an RPM signal for the warning unit's gearbox-mounted Hall-effect senders. When the collective is at least 0.2 to 0.4 inch (measured at grip) above the full down position and rotor RPM is 95% or less, the warning unit illuminates the Low RPM annunciator segment and sounds two warning horns. Fully lowering the collective will silence both horns, but will not extinguish the annunciator segment. The Low RPM annunciator segment and both horns must remain off above 95% rotor RPM.

To make an adjustment, remove the plastic plug (from a 3/8-inch diameter hole) in the left-vertical panel exterior. Adjust screw on back of warning unit (2 turns equals approximately 1% change).

96-70 Audio System

A five-place audio system is standard. An audio control panel allows control of communication radios, intercom, and stereo-capable auxiliary audio (e.g. music) input.

The system has four modes of operation. In normal mode, all occupants hear incoming and outgoing radio communications, intercom, and auxiliary audio. The pilot and copilot can both transmit on the selected radio.

In crew mode, the pilot and copilot are isolated from rear seat occupants. The crew does not hear rear seat intercom or auxiliary audio and rear seat occupants do not hear crew intercom or radio communications.

In pilot isolate mode, the pilot is isolated from all other occupants. The copilot is grouped with the rear seat occupants for intercom and auxiliary audio.

In emergency mode, the pilot transmits and receives on the number one radio only (regardless of audio panel switch position). All other audio is disabled.

The first three modes are selectable via the audio control panel. Emergency mode occurs if power to the panel is lost. In addition to the mode control, the audio panel has controls for squelch, volume, and selection of transmit and receive radios. A detail description of these controls can be found in the audio system operation manual.

96-70 Audio System (continued)

Headset jacks are located in the ceiling near each seat. Pilot and copilot intercom and transmit are controlled via trigger switches on the cyclic grips. The trigger has two detents; the first detent activates the intercom and the second detent transmits. Additional intercom buttons are located on the forward side of the rear seats and on the left forward floor. Intercom may also be set to be voice activated. Auxiliary audio may be plugged in to a jack on the forward face of the circuit breaker panel. In normal mode, auxiliary audio is automatically muted during radio communication.

96-80 Engine Monitoring Unit (EMU)

Refer to Section 71-43 for EMU maintenance procedures.

The Engine Monitoring Unit (EMU) is a digital recording device mounted behind the right rear seatback panel. The EMU continuously monitors N_1, N_2, engine torque, and MGT. EMU status is indicated by the EMU segment on the annunciator panel. The EMU segment will only illuminate while the annunciator panel test button is depressed. The EMU requires approximately ten seconds to initialize after the aircraft battery is switched ON. Once initialization is complete, steady illumination of the annunciator means normal EMU operation. A slowly flashing indication (once every two seconds) is given if the EMU detects a fault in its senders or circuitry. A fast flashing indication (four times per second) is given if the EMU has detected an exceedance. A fault or exceedance indication should be investigated and reset by a qualified mechanic prior to further flight.

The EMU records exceedances of Rolls-Royce engine limits, not airframe operating limits as given in Section 2. The EMU will record an exceedance if any of the following are exceeded:

MGT during start:	999°C, or 927°C for 1 second, or 810°C for 10 seconds.
MGT engine running:	843°C, or 782°C for 6 seconds, or 706°C for 5 minutes.
N_1:	106%, or 105% for 15 seconds.
N_2:	110%, or 105% for 15 seconds. 78% to 88% for 60 seconds over 38% torque.
Torque:	122% for 15 seconds, or 104% for 5 minutes.

The EMU also records a start cycle when N_1 exceeds 30% and MGT is at least 343°C.

The EMU is intended to be used only as a maintenance aid. It is the pilot's responsibility to report any observed exceedances and the operator's responsibility to maintain a record of engine starts and time in service.

96-90 Emergency Locator Transmitter (ELT)

Refer to Section 25-61 for ELT programming instructions and maintenance procedures.

The Emergency Locator Transmitter (ELT) installation consists of a transmitter with internal battery pack, an external antenna, and a remote switch/annunciator. The transmitter is mounted to the upper steel tube frame and is accessible through the spring loaded air intake door in the right-side cowl. The remote switch/annunciator is located left of the cyclic stick.

The ELT is operated by a switch on the transmitter and by the remote switch. The transmitter switch has been set in the ARM position at installation and should always be in this position for flight. The remote switch/annunciator is a three position switch with indicator light. This switch should be in the ARMED position for flight. With both switches set to armed, the ELT will begin transmitting when subjected to a high "G" load. When the unit is transmitting, the red indicator light illuminates.

Moving the remote switch to ON activates the transmitter. Use the ON position if an emergency landing is imminent and time permits.

If the ELT is inadvertently activated, use the momentary RESET & TEST position of the remote switch to stop transmission and reset the unit. The red indicator will extinguish when unit is reset.

For more detailed instructions on ELT operation, maintenance, and required tests, refer to manufacturer's instructions supplied with the unit.

96-100 Electrical Load Analysis

COMPONENT	QTY	CONTINUOUS AMPS EACH	INTERMITTENT AMPS EACH	CONTINUOUS TOTAL	INTERMITTENT TOTAL
MAIN BUS					
WARNING LT PANEL	1	0.006	0.320	0.006	0.320
ROTOR BRAKE LT	1	---	0.044	0.000	0.044
MAPLIGHT	1	0.020	0.020	0.020	0.020
INTERIOR DOME LT	1	0.020	0.020	0.020	0.020
OAT GAGE	1	0.150	0.150	0.150	0.150
ENGINE TORQUEMETER	1	0.050	0.050	0.050	0.050
INSTRUMENT CLUSTER	1	0.375	0.375	0.375	0.375
MOP SENDER	1	0.025	0.025	0.025	0.025
TORQ SENDER	1	0.025	0.025	0.025	0.025
LOW RPM UNIT W/HORN	1	0.045	0.160	0.045	0.160
AA12S-600 AUDIO PANEL	1	1.000	1.000	1.000	1.000
N_2 GOVERNOR SYSTEM	1	0.000	0.087[1]	0.000	0.087[1]
N_2 GOV ACTUATOR @ 12V	1	---	0.150		
N_2 GOV RELAY @ 12V	1	---	0.010		
ANTI-ICE SOLENOID	1	0.670	0.670	0.670	0.670
HEATED PITOT	1	4.000	4.000	4.000	4.000
ENGINE HOUR METER	2	0.015	0.015	0.030	0.030
HYD CONTROL SOLENOID	1	---	0.800	0.000	0.800
ENGINE MONITORING UNIT	1	0.180	0.180	0.180	0.180
AVIONICS RELAY	1	---	0.060	0.000	0.060
LOW FUEL RELAY	1	---	0.010	0.000	0.010
WARNING LIGHT TEST CB	1	---	0.020	0.000	0.020
TACH PWR TEST RELAY	1	---	0.060	0.000	0.060
BOSE HEADSET	5	0.025	0.500	0.125	2.500
AUX POWER PLUG	1	2.000	2.000	2.000	2.000
SUBTOTAL (MAIN BUS)				8.721	12.606

96-100 Electrical Load Analysis (continued)

COMPONENT	QTY	CONTINUOUS AMPS EACH	INTERMITTENT AMPS EACH	CONTINUOUS TOTAL	INTERMITTENT TOTAL
LIGHTS BUS					
LANDING LT BALLAST	2	1.600[3]	5.250[3]	3.200	10.500
LANDING LT RELAY	1	0.060	0.060	0.060	0.060
CIRCUIT BREAKER LTS	1	0.001[3]	0.001[3]	0.001	0.001
INSTRUMENT LT	1	0.500[5]	0.500[5]	0.500[5]	0.500[5]
POST LTS	2	0.040[1]	0.040[1]	0.080	0.080
INTERNAL AVIONICS LTS	6	0.100[1]	0.100[1]	0.600	0.600
VERT CARD COMPASS LT	1	0.050[3]	0.050[3]	0.050	0.050
POSITION LT RH (GREEN)	1	0.250	0.250	0.250	0.250
POSITION LT LH (RED)	1	0.250	0.250	0.250	0.250
POSITION LT TAIL (WHT)	1	0.300	0.300	0.300	0.300
STROBE LIGHT	1	0.670	3.000	0.670	3.000
SUBTOTAL (LIGHTS BUS)				5.961	15.591
COMPONENT	QTY	CONTINUOUS AMPS EACH	INTERMITTENT AMPS EACH	CONTINUOUS TOTAL	INTERMITTENT TOTAL
AVIONICS BUS					
KY196A COM	1	1.000	5.000	1.000	5.000[2]
GNC 420W GPS/COM	1	1.215	4.200	1.215	1.215[2]
GNS 530AW GPS/COM/NAV	1	1.415	4.400	1.415	1.415[2]
GTX 330 XPDR	1	1.640	9.090	1.640	9.090
BLIND ENCODER	1	0.600	0.600	0.600	0.600
AM/FM/CD RCVR	1	1.500	1.500	1.500	1.500
KR87 ADF RCVR	1	0.429	0.429	0.429	0.429
KR22 MARKER BEACON	1	0.040	0.500	0.040	0.500
AVIONIC BLOWER	1	0.180	0.180	0.180	0.180
PILOT AV BLOWER	1	0.100	0.100	0.100	0.100
ELT[4]	1	---	---	---	---
HSI (PICT NAV SYSTEM)	1	1.730	1.730	1.730	1.730
ATTITUDE HORIZON	1	0.270	0.700	0.270	0.700
TURN COORDINATOR	1	0.350	0.350	0.350	0.350
RADAR ALTIMETER	1	0.727	0.727	0.727	0.727
SUBTOTAL (AVIONICS BUS)				11.196	23.536

96-100 Electrical Load Analysis (continued)

COMPONENT	QTY	CONTINUOUS AMPS EACH	INTERMITTENT AMPS EACH	CONTINUOUS TOTAL	INTERMITTENT TOTAL
TACH BUS					
N_2 TACH (INCL REG)	1	0.022[1]	0.022[1]	0.022[1]	0.022[1]
N_2 TACH @ 13.75V	1	0.035	0.035		
ROTOR TACH (INCL REG)	1	0.022[1]	0.022[1]	0.022[1]	0.022[1]
ROTOR TACH @13.75V	1	0.035	0.035		
SUBTOTAL (TACH BUS)				0.044	0.044
COMPONENT	QTY	CONTINUOUS AMPS EACH	INTERMITTENT AMPS EACH	CONTINUOUS TOTAL	INTERMITTENT TOTAL
OTHER EQUIPMENT					
TACH RELAY	1	0.060	0.060	0.060	0.060
CLOCK (DIGITAL)	1	0.003	0.003	0.003	0.003
BATTERY RELAY	1	0.250	6.000	0.250	6.000
START/GEN RELAY	1	0.250	6.000	0.250	6.000
GEN LT RELAY	1	0.010	0.010	0.010	0.010
GEN CONTROL UNIT	1	0.200[4]	2.000[5]	0.200	2.000
IGNITION EXCITER	1	---	1.500	0.000	1.500
EXTERNAL PWR RELAY[2]	1	0.250	6.000	---	---
BAGGAGE COMPARTMENT LT[2]	1	0.020	0.020	---	---
SIGHT GLASS LED[2]	2	0.020	0.020	---	---
LATCHING START RELAY[3]	1	0.060	0.060	---	---
STARTER-GENERATOR[3]	1	---	231.06	---	---
SUBTOTAL (OTHER)				0.773	15.573
TOTAL (MAIN + LIGHTS + AVIONICS + TACH + OTHER)				26.70	67.357
STARTER-GENERATOR MARGIN (160-AMP MAX)				+133.30	+92.657

Intentionally Blank

CHAPTER 97

AVIONICS

Section	Title	Page
97-10	Garmin G500H Electronic Flight Instrument System (EFIS) Installation	97.1
97-11	LRU Installation – GDU 620 Display	97.1
97-12	LRU Installation – GDC 74H Air Data Computer	97.1
97-13	LRU Installation – GRS 77H AHRS	97.3
97-14	LRU Installation – GMU 44 Magnetometer	97.4
97-15	GPS Installation	97.6
97-20	Radar Altimeter Installation	97.9
97-30	Garmin GTX 33 Transponder Installation	97.12
97-40	Garmin GDL 69A XM Receiver Installation	97.15
97-50	Avionics for R66 S/N 293, 520, 522 & Subsequent	97.17
97-51	Cyclic Grip Assembly	97.17
97-52	Aspen EFD Electronic Flight Instrument System (EFIS) Installations	97.17
97-53	Garmin GTR 225B COM Radio Installation	97.18
97-54	Garmin GDL 88 ADS-B In Receiver Installation	97.20
97-55	Garmin GTX 330 ES Transponder Installation	97.22
97-56	Garmin GTN 600/700-series GPS Installation	97.24
97-57	Electrical System Installation	97.27
97-58	Intercom System Installation	97.27
97-60	Avionics Software	97.29

Intentionally Blank

CHAPTER 97

AVIONICS

97-10 Garmin G500H Electronic Flight Instrument System (EFIS) Installation

The Garmin G500H is an integrated avionics display system that provides flight instrument, moving-map navigation, and additional situational awareness information to the flight crew via the Garmin GDU 620 Display.

NOTE
Refer to Garmin G500H Instructions for Continued Airworthiness.

97-11 LRU Installation – GDU 620 Display

Refer to § 95-70 for Garmin GDU 620 Display maintenance procedures.

97-12 LRU Installation – GDC 74H Air Data Computer

Refer to R66 Illustrated Parts Catalog (IPC) Figure 97-5.

A. Description

The GDC 74H Air Data Computer (ADC) compiles information from the pitot-static system and an Outside Air Temperature (OAT) sensor. The GDC 74H computer provides pressure altitude, airspeed, vertical speed, and OAT information to the G500H EFIS system. The GDC 74H computer communicates with the GDU 620 Display and GRS 77H AHRS using an ARINC 429 digital interface.

B. Schematic

Refer to MM Figure 98-10 for GDC 74H Air Data Computer Installation electrical schematic.

C. Removal

1. Turn battery & avionics switches off and pull out EFIS (5 amp) circuit breaker at panel.
2. Hinge left seat forward and remove F748-1 cover assembly.
3. Disconnect airframe harness from GDC 74H air data computer at connectors.
4. Disconnect pitot and static tube fittings from computer and plug fittings.
5. Remove screws securing computer to F950-2 support assembly. Carefully remove computer from under left seat.

97-12 LRU Installation – GDC 74H Air Data Computer (continued)

D. Installation

1. Turn battery & avionics switches off and pull out EFIS (5 amp) circuit breaker at panel.

2. Place GDC 74H air data computer on F950-2 support assembly and install screws. Verify security.

3. Remove plugs from fittings and connect pitot and static tube fittings to computer. Verify security. Perform pitot and static system leak checks per § 95-10.

4. Connect airframe harness to computer at connectors.

5. Push in EFIS circuit breaker (5 amp) at panel. Turn battery & avionics switches on.

NOTE
System configuration and/or software loading may be required.

6. Perform appropriate functional checks per Garmin G500H Instructions for Continued Airworthiness. Turn battery & avionics switches off.

7. Install F748-1 cover assembly and hinge left seat back.

E. Scheduled Maintenance and Inspections

Refer to Garmin G500H EFIS Maintenance Manual, Section 5 Periodic Maintenance.

F. Special Maintenance and Inspections

1. Turn battery & avionics switches off. Open circuit breaker panel, hinge left seat forward, and remove F748-1 cover assembly.

2. Inspect condition of and verify no obvious damage to Garmin GDC 74H Air Data Computer, pitot-static tubes, circuit breaker, and wiring. Verify no loose, chafed, or broken wires or terminals. Verify no evidence of arcing. Verify equipment security.

3. Secure circuit breaker panel. Perform ground checks per Part D steps 5 thru 7.

97-13 LRU Installation – GRS 77H AHRS

Refer to R66 Illustrated Parts Catalog (IPC) Figure 97-9.

A. Description

The Garmin GRS 77H Attitude and Heading Reference System (AHRS) provides aircraft attitude information to the G500H EFIS system. The GRS 77H interfaces with both the GDC 74H Air Data Computer and the GMU 44 magnetometer. The GRS 77H also utilizes GPS data forwarded from the GDU 620. Actual attitude and heading information is sent to the GDU 620 using an ARINC 429 digital interface.

B. Schematic

Refer to MM Figure 98-11 for GRS 77H AHRS Installation electrical schematic.

C. Removal

1. Turn battery & avionics switches off and pull out EFIS (5 amp) circuit breaker at panel.
2. Hinge left seat forward and remove F950-3 cover assembly.
3. Disconnect airframe harness from GRS 77H AHRS at connectors.
4. Loosen thumbscrews securing AHRS to F950-1 support assembly. Carefully remove AHRS from under left seat.

D. Installation

1. Turn battery & avionics switches off and pull out EFIS (5 amp) circuit breaker at panel.
2. Place GRS 77H AHRS on F950-1 support assembly and tighten thumbscrews. Verify security.
3. Connect airframe harness to GRS 77H AHRS at connectors.
4. Push in EFIS circuit breaker (5 amp) at panel. Turn battery & avionics switches on.

NOTE
System configuration and/or software loading may be required.

5. Perform appropriate functional checks per Garmin G500H Instructions for Continued Airworthiness. Turn battery & avionics switches off.
6. Install F950-3 cover assembly and hinge left seat back.

97-13 LRU Installation – GRS 77H AHRS (continued)

E. Scheduled Maintenance and Inspections

Refer to Garmin G500H EFIS Maintenance Manual, Section 5 Periodic Maintenance.

F. Special Maintenance and Inspections

1. Turn battery & avionics switches off. Open circuit breaker panel, hinge left seat forward, and remove F950-3 cover assembly.

2. Inspect condition of and verify no obvious damage to Garmin GRS 77H AHRS, circuit breaker, and wiring. Verify no loose, chafed, or broken wires or terminals. Verify no evidence of arcing. Verify equipment security.

3. Secure circuit breaker panel. Perform ground checks per Part D steps 4 thru 6.

97-14 LRU Installation – GMU 44 Magnetometer

Refer to R66 Illustrated Parts Catalog (IPC) Figure 97-13.

A. Description

The GMU 44 magnetometer senses the earth's magnetic field. Data is sent to the GRS 77H AHRS for processing to determine aircraft magnetic heading. This unit receives power directly from the GRS 77H and communicates with the GRS 77H using an RS-485 digital interface.

B. Schematic

Refer to MM Figure 98-11 for GRS 77H AHRS Installation electrical schematic.

C. Removal

1. Turn battery & avionics switches off and pull out EFIS (5 amp) circuit breaker at panel.

2. Remove tailcone cowling per § 53-23.

3. Supporting GMU 44 magnetometer, remove hardware securing magnetometer to F950-4 bracket.

4. Remove MS21919WDG12 clamp and disconnect magnetometer harness from F951-1 harness assembly at connectors. Remove magnetometer.

97-14 LRU Installation – GMU 44 Magnetometer

D. Installation

1. Turn battery & avionics switches off and pull out EFIS (5 amp) circuit breaker at panel.

2. Position MS21919WDG12 clamp on GMU 44 magnetometer connector.

3. Install hardware securing magnetometer to F950-4 bracket. Verify security.

4. Connect F951-1 harness assembly to magnetometer harness at connectors.

5. Push in EFIS circuit breaker (5 amp) at panel. Turn battery & avionics switches on.

NOTE
Software loading and/or magnetic calibration may be required.

6. Perform appropriate functional checks per Garmin G500H Instructions for Continued Airworthiness. Turn battery & avionics switches off.

7. Install tailcone cowling per § 53-23.

E. Scheduled Maintenance and Inspections

Refer to Garmin G500H EFIS Maintenance Manual, Section 5 Periodic Maintenance.

F Special Maintenance and Inspections

1. Turn battery & avionics switches off. Open circuit breaker panel and remove tailcone cowling per § 53-23.

2. Inspect condition of and verify no obvious damage to Garmin GMU 44 magnetometer, circuit breaker, and wiring. Verify no loose, chafed, or broken wires or terminals. Verify no evidence of arcing. Verify equipment security.

3. Secure circuit breaker panel. Perform ground checks per Part D steps 5 thru 7.

97-15 GPS Installation

Refer to R66 Illustrated Parts Catalog (IPC) Figure 97-1.

> NOTE
>
> Refer to Garmin GTN 600/700 series Maintenance Manual and Instructions for Continued Airworthiness.

A. Description

The G500H system requires connection to at least one WAAS-enabled GPS receiver. Garmin's Wide Area Augmentation System (WAAS) utilizes ground reference stations that monitor GPS satellite data and issue correction messages which are broadcast via satellite to WAAS-enabled GPS receivers, improving accuracy, integrity, and availability.

One GTN 700-series, or one or two GTN 600-series, GPS(s) may be installed in the G060 upper console.

Also refer to § 97-56 for Garmin GTN 600/700-series GPS Installation.

B. Schematic

Refer to MM Figure 98-12 for GTN 600/700-series GPS Installation electrical schematic.

C. Removal

1. Turn battery & avionics switches off and pull out GPS 1 (5 amp) and GPS 2 (5 amp) circuit breakers as required at panel.
2. Loosen radio key securing GTN 600/700-series GPS(s) to tray in upper console.
3. Carefully unplug/remove GPS(s) from tray.

D. Installation

1. Turn battery & avionics switches off and pull out GPS 1 (5 amp) and GPS 2 (5 amp) circuit breakers as required at panel.
2. Carefully plug-in/install GTN 600/700-series GPS(s) in appropriate location in tray in upper console.
3. Tighten radio key securing GPS(s) to tray. Verify equipment security.
4. Push in GPS 1 (5 amp) and GPS 2 (5 amp) circuit breakers as required at panel. Turn battery & avionics switches on.
5. Perform appropriate functional checks per Garmin GTN 600/700 series Pilot's Guide. Turn battery & avionics switches off.

97-15 GPS Installation (continued)

E. Antenna

Refer to § 6-80 for antenna locations and R66 Illustrated Parts Catalog (IPC) Chapter 6.

> NOTE
>
> Antenna installation depends on number of COM installations and additional equipment installed.

Removal

1. Turn battery & avionics switches off and pull out GPS 1 (5 amp) and GPS 2 (5 amp) circuit breakers as required at panel.

2. Using plastic scraper, remove B270-1 sealant from around GPS antenna at corners where it attaches to tailcone.

3. Disconnect antenna cable from antenna. As required, remove B270-13 sealant from fastener holes. Remove hardware securing antenna (and B322-10 spacers for NAV) to tailcone (or chin for glideslope) and remove antenna.

Installation

1. Turn battery & avionics switches off and pull out GPS 1 (5 amp) and GPS 2 (5 amp) circuit breakers as required at panel.

2. a. For GPS antenna:

   i. Remove paint & primer from antenna mating surfaces to ensure electrical ground.

   ii. As required, apply light coat B270-13 sealant to screw threads and install screws securing antenna to tailcone. As required, seal around screw heads and fill fastener holes using B270-13 sealant and allow to dry. Verify security.

   iii. Apply small bead B270-1 sealant (0.1 inch max in height) around antenna at corners where it attaches to tailcone and allow to dry.

   b. For NAV antenna:

   i. Install hardware and B322-10 spacers (thick edge inward) securing antenna to tailcone. Verify security.

   c. For glideslope antenna:

   i. Install screws securing antenna to chin. Verify security.

3. Connect antenna cable to antenna. Verify security.

4. Perform ground checks per Part D steps 4 and 5.

97-15 GPS Installation (continued)

F. Scheduled Maintenance and Inspections

Every 100 hour or annual inspection, determine software and database versions and update per Garmin GTN 600/700 series Pilot's Guide as required.

NOTE
Garmin requires database information be updated regularly to ensure information is current.

G. Special Maintenance and Inspections

1. Turn battery & avionics switches off. Open circuit breaker panel and upper console.

2. Inspect condition of and verify no obvious damage to GPS(s), copper bus bars, circuit breaker, and wiring. Verify no loose, chafed, or broken wires or terminals. Verify no evidence of arcing. Verify equipment security.

3. Secure circuit breaker panel and upper console. Perform ground checks per Part D steps 4 and 5.

97-20 Radar Altimeter Installation

Refer to R66 Illustrated Parts Catalog (IPC) Figures 97-15, 95-17, and 95-19.

A. Description

The FreeFlight RA-4500 radar altimeter has ARINC 429 output for communication with electronic displays such as the G500H EFIS system. Radar altitude data can be displayed on the PFD portion of the Garmin GDU 620 display.

B. Schematic

Refer to MM Figure 98-13 for Radar Altimeter Installation electrical schematic.

C. Removal

RAD-40 Indicator

1. Turn battery & avionics switches off and pull out RADAR ALT (2 amp) circuit breaker at panel.

2. Remove perimeter screws securing instrument face to upper console and carefully pull face aft, or remove Garmin GDU 620 Display per § 95-70.

3. a. For Above-Console Installation: Remove hardware securing B560 enclosure assembly to instrument console and remove hardware securing B560 faceplate to RAD-40 Indicator.

   b. For In-Console Installation: Supporting RAD-40 indicator, remove hardware securing B421-1 visor assembly, A590-4 cover plate, and indicator to instrument face.

4. Disconnect console harness from indicator and carefully remove indicator.

ATG-410 Tone Generator

1. Turn battery & avionics switches off and pull out RADAR ALT (2 amp) circuit breaker at panel. Open instrument console or remove Garmin GDU 620 Display per § 95-70.

2. Supporting ATG-410 tone generator, remove screws securing tone generator to keel panel. Carefully remove tone generator and disconnect console harness.

RA-4000/RA-4500 Radar Altimeter

1. Turn battery & avionics switches off and pull out RADAR ALT (2 amp) circuit breaker at panel. Hinge front left seat forward.

2. Disconnect airframe and antenna harnesses from RA-4000/RA-4500 radar altimeter.

3. Supporting radar altimeter, remove screws securing radar altimeter to F542-2 support. Carefully remove radar altimeter from under left seat.

97-20 Radar Altimeter Installation (continued)

D. Installation

RAD-40 Indicator

1. Turn battery & avionics switches off and pull out RADAR ALT (2 amp) circuit breaker at panel.

2. Connect console harness to RAD-40 Indicator.

3. a. For Above-Console Installation: Install hardware securing B560 faceplate to indicator and install hardware securing B560 enclosure assembly to instrument console.

   b. For In-Console Installation: Supporting indicator, install hardware securing B421-1 visor assembly, A590-4 cover plate, and indicator to instrument face.

4. Install perimeter screws securing instrument face to upper console or install Garmin GDU 620 Display per § 95-70.

5. Push in RADAR ALT (2 amp) circuit breaker at panel. Turn battery & avionics switches on.

6. Perform appropriate functional checks per Freeflight Systems Instructions for Continued Airworthiness. Turn battery & avionics switches off.

ATG-410 Tone Generator

1. Turn battery & avionics switches off and pull out RADAR ALT (2 amp) circuit breaker at panel.

2. Connect console harness to ATG-410 tone generator.

3. Position tone generator on keel panel and install screws. Verify security.

4. Close instrument console or install Garmin GDU 620 Display per § 95-70.

5. Push in RADAR ALT (2 amp) circuit breaker at panel. Turn battery & avionics switches on.

6. Perform appropriate functional checks per Freeflight Systems Instructions for Continued Airworthiness. Turn battery & avionics switches off.

RA-4000/RA-4500 Radar Altimeter

1. Turn battery & avionics switches off and pull out RADAR ALT (2 amp) circuit breaker at panel.

2. Connect airframe and antenna harnesses to radar altimeter.

3. Supporting RA-4000/RA-4500 radar altimeter, install screws securing radar altimeter to F542-2 support. Verify security. Hinge front left seat aft.

4. Push in RADAR ALT (2 amp) circuit breaker at panel. Turn battery & avionics switches on.

5. Perform appropriate functional checks per Freeflight Systems Instructions for Continued Airworthiness. Turn battery & avionics switches off.

97-20 Radar Altimeter Installation (continued)

E. Antenna

Refer to § 6-80 for antenna locations & R66 Illustrated Parts Catalog (IPC) Chapter 6.

Removal

1. Turn battery & avionics switches off and pull out RADAR ALT (2 amp) circuit breaker at panel.
2. Remove hardware securing F469 scuff plate and carpet assembly to floor, remove plate, and peel back carpet as required. Remove hole plug.
3. Disconnect antenna cable from antenna.
4. Remove screws securing antenna to chin. Repeat steps for opposite-side antenna.

Installation

1. Turn battery & avionics switches off and pull out RADAR ALT (2 amp) circuit breaker at panel.
2. Connect antenna cable to antenna and install screws securing antenna to chin. Verify security.
3. Install floor hole plug. Install hardware securing F469 scuff plate and carpet assembly to floor. Repeat steps for opposite-side antenna.
4. Push in RADAR ALT (2 amp) circuit breaker at panel. Turn battery & avionics switches on.
5. Perform appropriate functional checks per Freeflight Systems Instructions for Continued Airworthiness. Turn battery & avionics switches off.

F. Scheduled Maintenance and Inspections

Refer to Freeflight Systems Instructions for Continued Airworthiness.

G. Special Maintenance and Inspections

1. Turn battery & avionics switches off. Open circuit breaker panel. Open instrument console, remove perimeter screws securing instrument face to upper console, or remove Garmin GDU 620 Display per § 95-70. Hinge front left seat forward as required.
2. Inspect condition of and verify no obvious damage to RAD-40 Indicator, ATG-410 Tone Generator, RA-4000/RA-4500 Radar Altimeter, copper bus bars, circuit breaker, and wiring. Verify no loose, chafed, or broken wires or terminals. Verify no evidence of arcing. Verify equipment security.
3. Secure circuit breaker panel and close instrument console, install perimeter screws securing instrument face to upper console, or install Garmin GDU 620 Display per § 95-70. Hinge front left seat aft as required.

97-30 Garmin GTX 33 Transponder Installation

Refer to R66 Illustrated Parts Catalog (IPC) Figure 97-21.

> NOTE
>
> Refer to Garmin GTX 33 Transponder Maintenance Manual and Instructions for Continued Airworthiness.

A. Description

The Garmin GTX 33 is a remote-mounted transponder with extended-squitter ADS-B broadcast capability. The GTX 33 has no control panel face; it is controlled via the Garmin GTN 600/700-series GPS navigator.

Refer to § 97-55 Garmin GTX 330 ES Transponder Installation.

B. Schematic

Refer to MM Figure 98-14 for Garmin GTX 33 Transponder Installation electrical schematic.

C. Removal

1. Turn battery & avionics switches off and pull out XPDR (5 amp) circuit breaker at panel.
2. Remove hardware securing F640 face assembly to avionics panel and remove face.
3. Loosen screw and swing handle across GTX 33 transponder to unlock. Carefully unplug/remove transponder from tray.

D. Installation

1. Turn battery & avionics switches off and pull out XPDR (5 amp) circuit breaker at panel.
2. Carefully plug-in/install GTX 33 transponder in appropriate location in avionics tray.
3. Swing handle across transponder to lock and tighten screw. Verify equipment security.
4. Install hardware securing F640 face assembly to avionics panel.
5. Push in XPDR (5 amp) circuit breaker at panel. Turn battery & avionics switches on.
6. Perform appropriate functional checks per Garmin GTX 33 Transponder Maintenance Manual and Instructions for Continued Airworthiness. Turn battery & avionics switches off.

97-30 Garmin GTX 33 Transponder Installation (continued)

E. Antenna

Refer to § 6-80 for antenna locations & R66 Illustrated Parts Catalog (IPC) Chapter 6.

> NOTE
>
> Antenna installation depends on optional equipment installed.

Removal

1. Turn battery & avionics switches off and pull out XPDR (5 amp) circuit breaker at panel.
2. Using plastic scraper, remove B270-1 sealant from around transponder antenna at corners where it attaches to B322 plate/doubler.
3. Remove screws securing plate/doubler to cabin skin and disconnect antenna cable from antenna. Remove hardware securing plate/doubler to antenna and remove antenna.

Installation

1. Turn battery & avionics switches off and pull out XPDR (5 amp) circuit breaker at panel.
2. Remove paint & primer from between cabin skin and B322 plate/doubler to ensure electrical ground.
3. Install hardware securing transponder antenna to plate/doubler. Verify security. Apply small bead B270-1 sealant (0.1 inch max in height) around antenna at corners where it attaches to plate/doubler and allow to dry.
4. Connect antenna cable to antenna and install screws securing mounting plate to cabin skin. Verify security.
5. Perform ground checks per Part D steps 4 and 5.

F. Scheduled Maintenance and Inspections

Every 100 hour or annual inspection, determine software and database versions and update per Garmin GTX 33 Transponder Maintenance Manual and Instructions for Continued Airworthiness as required.

> NOTE
>
> Garmin requires database information be updated regularly to ensure information is current.

97-30 Garmin GTX 33 Transponder Installation (continued)

G. Special Maintenance and Inspections

1. Turn battery & avionics switches off. Open circuit breaker panel.

2. Remove GTX 33 transponder per Part C. Inspect condition of and verify no obvious damage to transponder, radio tray, copper bus bars, circuit breaker, and wiring. Verify no loose, chafed, or broken wires or terminals. Verify no evidence of arcing.

3. Secure circuit breaker panel. Install transponder per Part D.

97-40 Garmin GDL 69A XM Receiver Installation

Refer to R66 Illustrated Parts Catalog (IPC) Figure 97-23.

> NOTE
>
> Refer to Garmin GDL 69A XM Receiver Instructions for Continued Airworthiness.

A. Description

The GDL 69A XM Satellite Radio receives broadcast weather data and audio entertainment. The GDL 69A has no control panel face; weather data and audio controls are displayed on the G500H EFIS MFD or by a GTN 600/700-series GPS navigator. The GDL 69A interfaces with the audio panel to distribute the audio signal.

A subscription to XM Satellite Radio service enables GDL 69A capability.

B. Schematic

Refer to MM Figure 98-15 for Garmin GDL 69A XM Receiver Installation electrical schematic.

C. Removal

1. Turn battery & avionics switches off and pull out XM (2 amp) circuit breaker at panel.
2. Remove hardware securing F640 face assembly to avionics panel and remove face.
3. Loosen screw and swing handle across GDL 69A receiver to unlock. Carefully unplug/remove receiver from tray.

D. Installation

1. Turn battery & avionics switches off and pull out XM (5 amp) circuit breaker at panel.
2. Carefully plug-in/install GDL 69A receiver in appropriate location in avionics tray.
3. Swing handle across receiver to lock and tighten screw. Verify equipment security.
4. Install hardware securing F640 face assembly to avionics panel.
5. Push in XM (2 amp) circuit breaker at panel. Turn battery & avionics switches on.
6. Perform appropriate functional checks per Garmin GDL 69A XM Receiver Instructions for Continued Airworthiness. Turn battery & avionics switches off.

97-40 Garmin GDL 69A XM Receiver Installation (continued)

E. Antenna

Refer to § 6-80 for antenna locations & R66 Illustrated Parts Catalog (IPC) Chapter 6.

> NOTE
>
> Antenna installation depends on optional equipment installed.

Removal

1. Turn battery & avionics switches off and pull out XM (2 amp) circuit breaker at panel.
2. Using plastic scraper, remove B270-1 sealant from around XM antenna at corners where it attaches to F706-1 cowling.
3. Remove screws securing antenna to cowling and disconnect antenna cable from antenna. Remove antenna and rubber gasket.

Installation

1. Turn battery switches off and pull out XM (2 amp) circuit breaker at panel.
2. Install hardware securing XM antenna (with rubber gasket) to F706-1 cowling. Verify security. Apply small bead B270-1 sealant (0.1 inch max in height) around antenna at corners where it attaches to cowling and allow to dry.
3. Connect antenna cable to antenna. Verify security.
4. Perform ground checks per Part D steps 4 and 5.

F. Scheduled Maintenance and Inspections

> NOTE
>
> Refer to Garmin GDL 69A XM Receiver Instructions for Continued Airworthiness.

G. Special Maintenance and Inspections

1. Turn battery & avionics switches off. Open circuit breaker panel.
2. Remove GDL 69A XM receiver per Part C. Inspect condition of and verify no obvious damage to XM receiver, circuit breaker, and wiring. Verify no loose, chafed, or broken wires or terminals. Verify no evidence of arcing.
3. Secure circuit breaker panel. Install XM receiver per Part D.

97-50 Avionics for R66 S/N 293, 520, 522, & Subsequent

97-51 Cyclic Grip Assembly

Refer to R66 Illustrated Parts Catalog (IPC) Figures 67-1 & 67-9.

A. Description of New Features

The angle of the pilot's cyclic grip can be adjusted fore and aft relative to the cross tube. The most forward position provides the most control clearance at aft cyclic.

B. Grip Angle Adjustment

1. Loosen cap screws securing pilot's cyclic grip, block assembly, and bar to grip weldment.

2. Rotate grip about weldment to desired angle. Special torque cap screws to 40 in.-lb.

C. Removal and Installation

Refer to § 67-12 for cyclic grip assembly removal and installation procedures.

D. Schematic

Refer to Figure 98-1 for F024 electrical system schematic.

97-52 Aspen EFD Electronic Flight Instrument System (EFIS) Installations

Refer to § 95-80 for Aspen EFD EFIS Installations.

A. Schematic

Refer to Figure 98-16 for Aspen EFD500H Display Installation electrical schematic.

Refer to Figure 98-17 for Aspen EFD1000H Display Installation electrical schematic.

97-53 Garmin GTR 225B COM Radio Installation

Refer to R66 Illustrated Parts Catalog (IPC) Figure 97-23.

> NOTE
>
> Refer to Garmin GTR 225B Maintenance Manual and Instructions for Continued Airworthiness.

A. Description of New Features

The new C802-2 COM radio (Garmin GTR 225B) includes similar communication features available in the earlier R66 COM radio (KY196A [28V]), but also includes an airport frequency database, ability to monitor the standby frequency, and improved user memory channel functionality. The new COM radio is a dual voltage unit, suitable for use in 14V and 28V systems.

B. Schematic

Refer to Figure 98-9 for C802-2 COM Radio Installation electrical schematic.

C. Removal

1. Turn battery switch off and pull out COM radio (5 amp) circuit breaker at panel.
2. Loosen radio key securing C802-2 COM radio to avionics tray.
3. Carefully unplug/remove radio from tray.

D. Installation

1. Turn battery switch off and pull out COM radio (5 amp) circuit breaker at panel.
2. Carefully plug-in/install C802-2 COM radio in appropriate location in avionics tray.
3. Tighten radio key securing radio to tray. Verify equipment security.
4. Push in COM radio (5 amp) circuit breaker at panel. Turn battery & avionics switches on.
5. Perform appropriate functional checks per Garmin GTR 225B Pilot's Guide. Turn battery & avionics switches off.

E. Antenna

Refer to § 6-80 for antenna locations and R66 Illustrated Parts Catalog (IPC) Chapter 6.

> NOTE
>
> Antenna installation depends on number of COM installations and additional equipment installed.

97-53 Garmin GTR 225B COM Radio Installation (continued)

E. Antenna (continued)

Removal

1. Turn battery switch off and pull out COM radio (5 amp) circuit breaker at panel.
2. Using plastic scraper, remove B270-1 sealant from around COM antenna at corners where it attaches to tailcone.
3. Disconnect antenna cable from antenna. As required, remove B270-13 sealant from fastener holes. Remove screws securing antenna to tailcone and remove antenna.

Installation

1. Turn battery switch off and pull out COM radio (5 amp) circuit breaker at panel.
2. Remove paint & primer from antenna mating surfaces to ensure electrical ground.
3. As required, apply light coat B270-13 sealant to screw threads and install screws securing antenna to tailcone. As required, seal around screw heads and fill fastener holes using B270-13 sealant and allow to dry. Verify security.
4. Apply small bead B270-1 sealant (0.1 inch max in height) around antenna at corners where it attaches to tailcone and allow to dry.
5. Connect antenna cable to antenna. Verify security.
6. Perform ground checks per Part D steps 4 and 5.

F. Scheduled Maintenance and Inspections

Every 100 hour or annual inspection, determine software and database versions and update per Garmin GTR 225B Pilot's Guide as required.

NOTE
Garmin requires database information be updated regularly to ensure information is current.

G. Special Maintenance and Inspections

1. Turn battery & avionics switches off. Open circuit breaker panel and upper console.
2. Inspect condition of and verify no obvious damage to COM radio, radio tray, copper bus bars, circuit breaker, and wiring. Verify no loose, chafed, or broken wires or terminals. Verify no evidence of arcing. Verify equipment security.
3. Secure circuit breaker panel and upper console. Perform ground checks per Part D steps 4 and 5.

97-54 Garmin GDL 88 ADS-B In Receiver Installation

Refer to R66 Illustrated Parts Catalog (IPC) Figure 97-27.

> NOTE
>
> Refer to Garmin GDL 88 Maintenance Manual and Instructions for Continued Airworthiness.

A. Description of New Features

Automatic Dependent Surveillance-Broadcast (ADS-B) "Out" equipment transmits aircraft specific-data and position information to air traffic control via GPS-based surveillance (rather than radar-based surveillance). ADS-B "In" equipment receives data from other aircraft or from air traffic control. The R66 may be equipped with ADS-B Out or with ADS-B Out and ADS-B In systems. Refer to § 97-15.

The ADS-B In system receives data via the C803-2 ADS-B (Garmin GDL 88) universal access transceiver (used as a receiver) on frequencies 978 MHz and 1090 MHz. Received data is displayed on the primary GPS screen. Refer to § 97-16.

B. Schematic

Refer to Figure 98-10 for C803-2 ADS-B Installation electrical schematic.

C. Removal

1. Turn battery switch off and pull out XPDR (5 amp) circuit breaker at panel.
2. Under left front seat, disconnect airframe harness from GDL 88 receiver at connectors.
3. Remove screws securing GDL 88 receiver to C904-1 mount assembly, and remove GDL 88 receiver.

D. Installation

1. Turn battery switch off and pull out XPDR (5 amp) circuit breaker at panel.
2. Under left front seat, position GDL 88 receiver on C904-1 mount assembly and install screws. Verify security.
3. Connect airframe harness to GDL 88 receiver at connectors.
4. Push in XPDR (5 amp) circuit breaker at panel. Turn battery & avionics switches on.
5. Perform appropriate functional checks per Garmin GDL 88 Pilot's Guide. Turn battery & avionics switches off.

97-54 Garmin GDL 88 ADS-B In Receiver Installation (continued)

E. Antenna

Refer to § 6-80 for antenna locations and R66 Illustrated Parts Catalog (IPC) Chapter 6.

> NOTE
>
> Antenna installation depends on number of COM installations and additional equipment installed.

Removal

1. Turn battery switch off and pull out XPDR (5 amp) circuit breaker at panel.
2. Using plastic scraper, remove B270-1 sealant from around GDL 88 antenna at corners where it attaches to belly.
3. Disconnect antenna cable from antenna. Remove hardware securing antenna to belly and remove antenna.

Installation

1. Turn battery switch off and pull out XPDR (5 amp) circuit breaker at panel.
2. Remove paint & primer from antenna mating surfaces to ensure electrical ground.
3. Install hardware securing antenna to belly. Apply small bead B270-1 sealant around antenna at corners where it attaches to belly and allow to dry.
4. Connect antenna cable to antenna. Verify security.
5. Perform ground checks per Part D steps 4 and 5.

F. Scheduled Maintenance and Inspections

> NOTE
>
> Refer to Garmin GDL 88 Maintenance Manual and Instructions for Continued Airworthiness.

G. Special Maintenance and Inspections

1. Turn battery & avionics switches off. Open circuit breaker panel and access left front seat.
2. Inspect condition of and verify no obvious damage to GDL 88, circuit breaker, and wiring. Verify no loose, chafed, or broken wires or terminals. Verify no evidence of arcing. Verify equipment security.
3. Secure circuit breaker panel and left front seat. Perform ground checks per Part D steps 4 and 5.

97-55 Garmin GTX 330 ES Transponder Installation

Refer to R66 Illustrated Parts Catalog (IPC) Figure 97-29.

> NOTE
>
> Refer to Garmin GTX 330 ES Maintenance Manual and Instructions for Continued Airworthiness.

A. Description of New Features

Automatic Dependent Surveillance-Broadcast (ADS-B) "Out" equipment transmits aircraft specific-data and position information to air traffic control via GPS-based surveillance (rather than radar-based surveillance). ADS-B Out equipment will be required for R66 operation in certain airspace in the United States after January 1, 2020. ADS-B "In" equipment receives data from other aircraft or from air traffic control. ADS-B In equipment is not required for R66 operation in the United States. The R66 may be equipped with ADS-B Out or with ADS-B Out and ADS-B In systems.

Both ADS-B systems operate mostly automatically. ADS-B equipment is programmed with aircraft specific-data at installation. ADS-B systems use the primary installed GPS for position information. Additional flight-specific data is entered by the pilot using transponder controls. ADS-B data is transmitted via the transponder's Extended Squitter (ES) on frequency 1090 MHz.

The ADS-B In system receives data via a receiver on frequencies 978 MHz and 1090 MHz. Received data is displayed on the primary GPS screen.

ADS-B Out equipment (transponder and primary GPS) or ADS-B Out and ADS-B In equipment (transponder, primary GPS, and receiver) must have power and must be in normal operating modes for systems to function properly. ADS-B Out system faults are annunciated on the transponder and primary GPS screens. ADS-B In system faults are annunciated on the primary GPS screen.

Change of aircraft registration may require ADS-B equipment programming by qualified maintenance personnel.

Refer to R66 Pilot's Operating Handbook Section 9 for additional information.

B. Schematic

Refer to Figure 98-11 for C804-15 transponder & blind encoder electrical schematic.

C. Removal

1. Turn battery switch off and pull out XPDR (5 amp) circuit breaker at panel.
2. Loosen radio key securing C804-15 transponder to avionics tray.
3. Carefully unplug/remove transponder from tray.

97-55 Garmin GTX 330 ES Transponder Installation (continued)

D. Installation

1. Turn battery switch off and pull out XPDR (5 amp) circuit breaker at panel.
2. Carefully plug-in/install C804-15 transponder in appropriate location in avionics tray.
3. Tighten radio key securing transponder to tray. Verify equipment security.
4. Push in XPDR (5 amp) circuit breaker at panel. Turn battery & avionics switches on.
5. Perform appropriate functional checks per Garmin GTX 330 ES Pilot's Guide. Turn battery & avionics switches off.

E. Antenna

Refer to § 6-80 for antenna locations and R66 Illustrated Parts Catalog (IPC) Chapter 6.

NOTE
Antenna installation depends on optional equipment installed.

Removal

1. Turn battery switch off and pull out XPDR (5 amp) circuit breaker at panel.
2. Using plastic scraper, remove B270-1 sealant from around transponder antenna at corners where it attaches to B322-11 mounting plate.
3. Remove screws securing mounting plate to cabin skin and disconnect antenna cable from antenna. Remove hardware securing mounting plate to antenna and remove antenna.

Installation

1. Turn battery switch off and pull out XPDR (5 amp) circuit breaker at panel.
2. Remove paint & primer from between cabin skin and B322-11 plate to ensure electrical ground.
3. Install hardware securing transponder antenna to mounting plate. Verify security. Apply small bead B270-1 sealant (0.1 inch max in height) around antenna at corners where it attaches to mounting plate and allow to dry.
4. Connect antenna cable to antenna and install screws securing mounting plate to cabin skin. Verify security.
5. Perform ground checks per Part D steps 4 and 5.

97-55 Garmin GTX 330 ES Transponder Installation (continued)

F. Scheduled Maintenance and Inspections

Every 100 hour or annual inspection, determine software and database versions and update per Garmin GTX 330 ES Pilot's Guide as required.

> NOTE
>
> Garmin requires database information be updated regularly to ensure information is current.

G. Special Maintenance and Inspections

1. Turn battery & avionics switches off. Open circuit breaker panel and upper console.

2. Inspect condition of and verify no obvious damage to transponder, radio tray, copper bus bars, circuit breaker, and wiring. Verify no loose, chafed, or broken wires or terminals. Verify no evidence of arcing. Verify equipment security.

3. Secure circuit breaker panel and upper console. Perform ground checks per Part D steps 4 and 5.

97-56 Garmin GTN 600/700-series GPS Installation

Refer to R66 Illustrated Parts Catalog (IPC) Figures 97-31, 97-35, and 97-37.

> NOTE
>
> Refer to Garmin GTN 600/700 series Maintenance Manual and Instructions for Continued Airworthiness.

A. Description of New Features

The new C831 GPS (Garmin GTN 600/700 series) includes similar navigation features available in the earlier R66 GPS (Garmin GNS 400/500 series), but the interface offers a combination of touch screen technology with traditional buttons and knobs.

One GTN 700 series, or one or two GTN 600 series, GPS(s) may be installed in the pilot-side console location only.

Note: R66 ADS-B Out system requires Garmin GTN 600/700 series GPS. Refer to § 97-15.

B. Schematic

Refer to Figure 98-12 for C831 GPS installation electrical schematic.

97-56 Garmin GTN 600/700-series GPS Installation (continued)

C. Removal

1. Turn battery switch off and pull out GPS 1 (5 amp) and GPS 2 (5 amp) circuit breakers as required at panel.

2. Loosen radio key securing C831 GPS(s) to tray in pilot's side console.

3. Carefully unplug/remove GPS(s) from tray.

D. Installation

1. Turn battery switch off and pull out GPS 1 (5 amp) and GPS 2 (5 amp) circuit breakers as required at panel.

2. Carefully plug-in/install C831 GPS(s) in appropriate location in tray in pilot's side console.

3. Tighten radio key securing GPS(s) to tray. Verify equipment security.

4. Push in GPS 1 (5 amp) and GPS 2 (5 amp) circuit breakers as required at panel. Turn battery & avionics switches on.

5. Perform appropriate functional checks per Garmin GTN 600/700 series Pilot's Guide. Turn battery & avionics switches off.

E. Antenna

Refer to § 6-80 for antenna locations and R66 Illustrated Parts Catalog (IPC) Chapter 6.

NOTE
Antenna installation depends on number COM installations and additional equipment installed.

Removal

1. Turn battery switch off and pull out GPS 1 (5 amp) and GPS 2 (5 amp) circuit breakers as required at panel.

2. Using plastic scraper, remove B270-1 sealant from around GPS antenna at corners where it attaches to tailcone.

3. Disconnect antenna cable from antenna. As required, remove B270-13 sealant from fastener holes. Remove screws securing antenna to tailcone and remove antenna.

97-56 Garmin GTN 600/700-series GPS Installation (continued)

E. Antenna (continued)

Installation

1. Turn battery switch off and pull out GPS 1 (5 amp) and GPS 2 (5 amp) circuit breakers as required at panel.

2. Remove paint & primer from antenna mating surfaces to ensure electrical ground.

3. As required, apply light coat B270-13 sealant to screw threads and install screws securing antenna to tailcone. As required, seal around screw heads and fill fastener holes using B270-13 sealant and allow to dry. Verify security.

4. Apply small bead B270-1 sealant (0.1 inch max in height) around antenna at corners where it attaches to tailcone and allow to dry.

5. Connect antenna cable to antenna. Verify security.

6. Perform ground checks per Part D steps 4 and 5.

F. Scheduled Maintenance and Inspections

Every 100 hour or annual inspection, determine software and database versions and update per Garmin GTN 600/700 series Pilot's Guide as required.

NOTE
Garmin requires database information be updated regularly to ensure information is current.

G. Special Maintenance and Inspections

1. Turn battery & avionics switches off. Open circuit breaker panel. Remove hardware securing pilot's side console shell assembly to tray and carefully pivot shell assembly upward (GPS[s] and faceplate may be also be removed).

2. Inspect condition of and verify no obvious damage to GPS(s), tray, copper bus bars, circuit breaker, and wiring. Verify no loose, chafed, or broken wires or terminals. Verify no evidence of arcing. Verify equipment security.

3. Secure circuit breaker panel and pilot's side console. Perform ground checks per Part D steps 4 and 5.

97-57 Electrical System Installation

A. Description of New Features

1. Main Switch Panel

   The main switch panel is located at the top of the avionics stack. Rocker-style switches are utilized for ergonomic comfort for this new location, and for the new console geometry (earlier R66s utilized paddle-style switches). Some secondary instruments such as OAT and clock and hourmeter are also relocated.

B. Schematic

Refer to Figure 98-13 for F024 electrical system schematic.

97-58 Intercom System Installation

> NOTE
>
> Refer to Garmin GMA 350H series Maintenance Manual and Instructions for Continued Airworthiness.

A. Description of New Features

The new Garmin GMA 350H audio control includes improved squelch and background noise suppression, 3D audio (if stereo headsets are used) which allows inputs from separate radios to sound as if they are coming from separate locations around the listener, and some control functions via voice command when a momentary pushbutton switch is depressed on the pilot's cyclic grip.

B. Schematic

Refer to Figure 98-14 for F060 Intercom System Installation (Garmin GMA 350H Audio Control) electrical schematic.

C. Removal

1. Turn battery switch off and pull out ICS (5 amp) circuit breaker at panel.
2. Loosen radio key securing Garmin GMA 350H audio control to avionics tray.
3. Carefully unplug/remove audio control from tray.

D. Installation

1. Turn battery switch off and pull out ICS (5 amp) circuit breaker at panel.
2. Carefully plug-in/install Garmin GMA 350H audio control in appropriate location in avionics tray.
3. Tighten radio key securing audio control to tray. Verify equipment security.
4. Push in ICS (5 amp) circuit breakers at panel. Turn battery & avionics switches on.
5. Perform appropriate functional checks per Garmin GMA 350H series Pilot's Guide. Turn battery & avionics switches off.

97-58 Intercom System Installation (continued)

E. Antenna

Refer to § 6-80 for marker beacon antenna location and R66 Illustrated Parts Catalog (IPC) Figure 6-13.

Removal

1. Turn battery switch off and pull out ICS (5 amp) circuit breaker at panel.
2. Using plastic scraper, remove B270-1 sealant from around CI 102 marker beacon antenna at corners where it attaches to belly panel.
3. Remove hardware securing F794 forward belly panel to belly and disconnect F850-210 antenna cable from antenna. Remove screws securing antenna to panel and remove antenna.

Installation

1. Turn battery switch off and pull out ICS (5 amp) circuit breaker at panel.
2. Remove paint and primer from antenna mating surfaces to ensure electrical ground.
3. Apply light coat B270-11 adhesive to screw threads and install screws securing CI 102 marker beacon antenna to F794 forward belly panel. Verify security.
4. Connect F850-210 antenna cable to antenna. Install screws securing forward belly panel to belly. Verify security.
5. Apply small bead B270-1 sealant (0.1 inch max in height) around antenna at corners where it attaches to belly panel and allow to dry.
6. Perform ground checks per Part D steps 4 and 5.

F. Scheduled Maintenance and Inspections

On condition.

G. Special Maintenance and Inspections

1. Turn battery & avionics switches off. Open circuit breaker panel and upper console.
2. Inspect condition of and verify no obvious damage to audio control, radio tray, copper bus bars, circuit breaker, and wiring. Verify no loose, chafed, or broken wires or terminals. Verify no evidence of arcing. Verify equipment security.
3. Secure circuit breaker panel and upper console. Perform ground checks per Part D steps 4 and 5.

97-60 Avionics Software

Modern avionics system software is complex and subject to rigorous testing by RHC to assure proper function and integration in the aircraft. System software updates should not be accomplished unless RHC has specifically approved the new version.

Prior to updating factory-installed avionics system software, consult www.robinsonheli.com > Publications > Avionics Support > Avionics Software page to determine if intended software version has been approved.

NOTE

The above statements apply to system (operating) software. Databases (e.g. charts, terrain, etc.) may be updated regularly using avionics manufacturer's recommended procedures.

Intentionally Blank

CHAPTER 98

WIRING DIAGRAMS

Figure	Title	Page
98-1	R66 Electrical System (F024-2 Revision Q)	98.1
98-2	R66 Electrical System (F024-1 Revision J)	98.2
98-3	Air Conditioning Installation	98.3
98-4	ADF Installation	98.5
98-5	Standard Audio Installation (NAT AA12S-600 Audio Control)	98.7
98-6	Dual Audio Control Installation	98.9
98-7	PA/Siren Installation	98.11
98-8	Autopilot Installation	98.13
98-9	Garmin GDU 620 Display Installation	98.15
98-10	Garmin GSU 75 ADAHRS Installation	98.17
98-11	Garmin GDC 74H Air Data Computer Installation	98.19
98-12	Garmin GRS 77H AHRS Installation	98.21
98-13	Garmin GTN 6XX/7XX-series GPS Installation (G500H EFIS)	98.23
98-14	Radar Altimeter Installation	98.25
98-15	Garmin GTX 3X5 Transponder Installation	98.27
98-16	Garmin GTX 33/328/330 ES Transponder Installation	98.29
98-17	Garmin GDL 69A XM Receiver Installation	98.31
98-18	Aspen EFD1000H Display Installation	98.33
98-19	Aspen EFD500H Display Installation	98.35
98-20	Garmin GTR 225B / GNC 225B NAV/COM Radio Installation	98.37
98-21	Garmin GTR 225B COM Radio Installation	98.39
98-22	Garmin GDL 88 ADS-B In Receiver Installation	98.41
98-23	Garmin GTN 6XX/7XX-series GPS Installation (Pilot-Side Console)	98.43
98-24	F060-4 & -5 Intercom System Installation (Garmin GMA 350H Audio Control)	98.45
98-25	F060-1 & -2 Intercom System Installation (Garmin GMA 350H Audio Control)	98.46
98-26	Lithium-Ion Battery Installation	98.47

Intentionally Blank

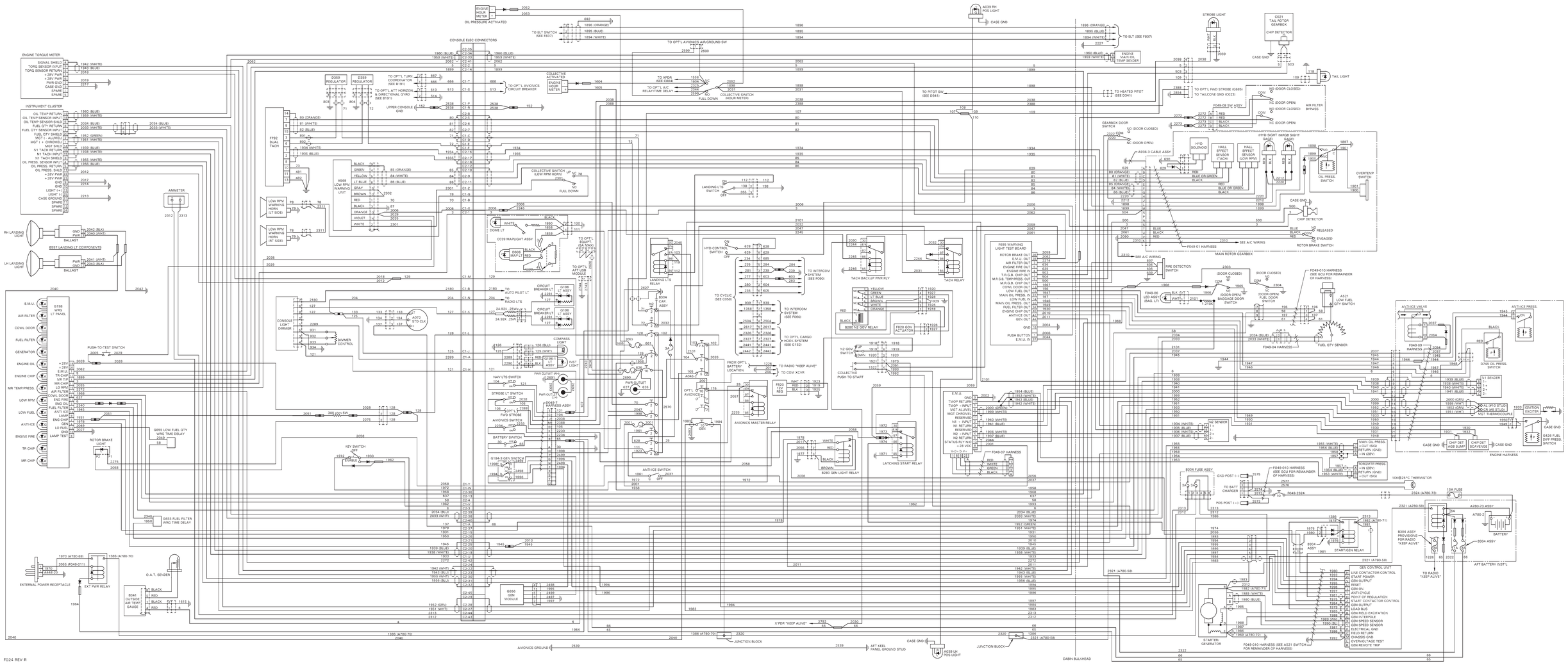

FIGURE 98-1 R66 ELECTRICAL SYSTEM (F024-2 REVISION R)

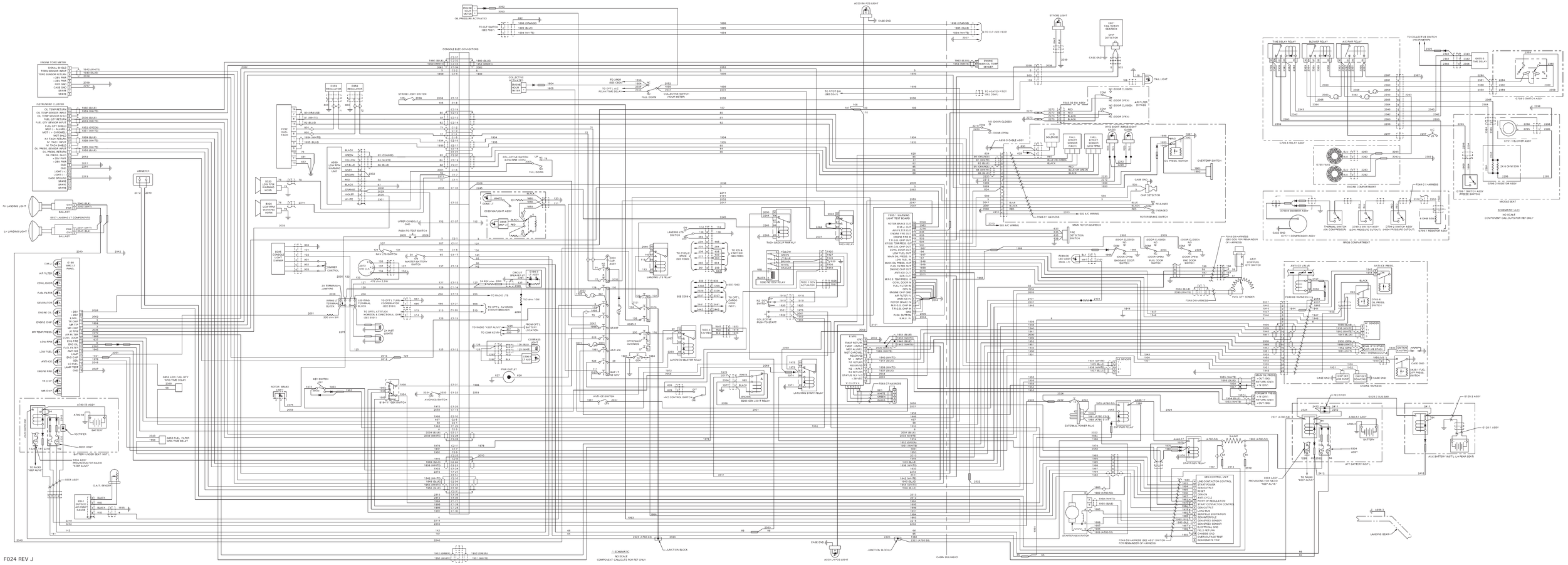

F024 REV J

FIGURE 98-2 R66 ELECTRICAL SYSTEM (F024-1 REVISION J)

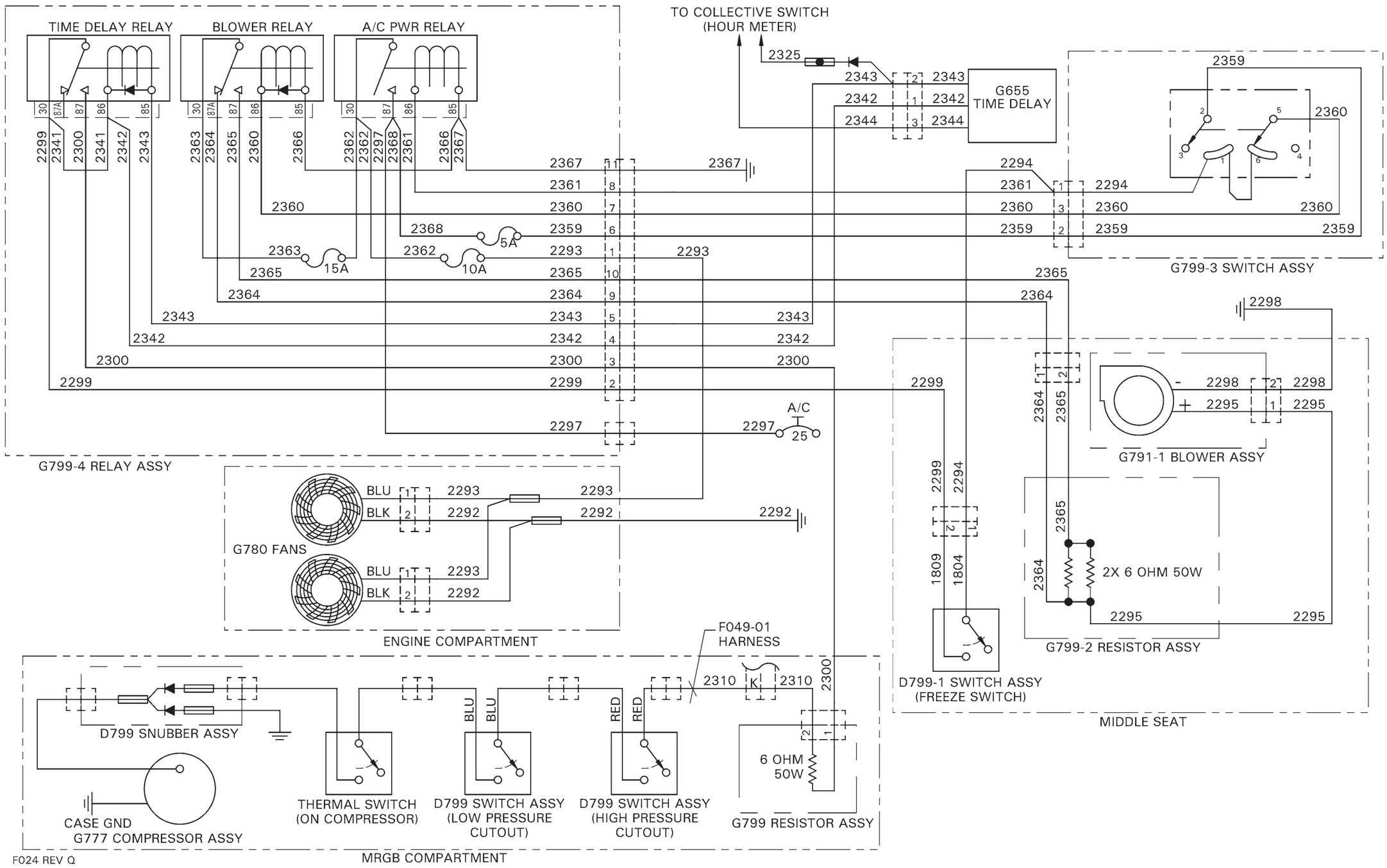

FIGURE 98-3 AIR CONDITIONING INSTALLATION

Intentionally Blank

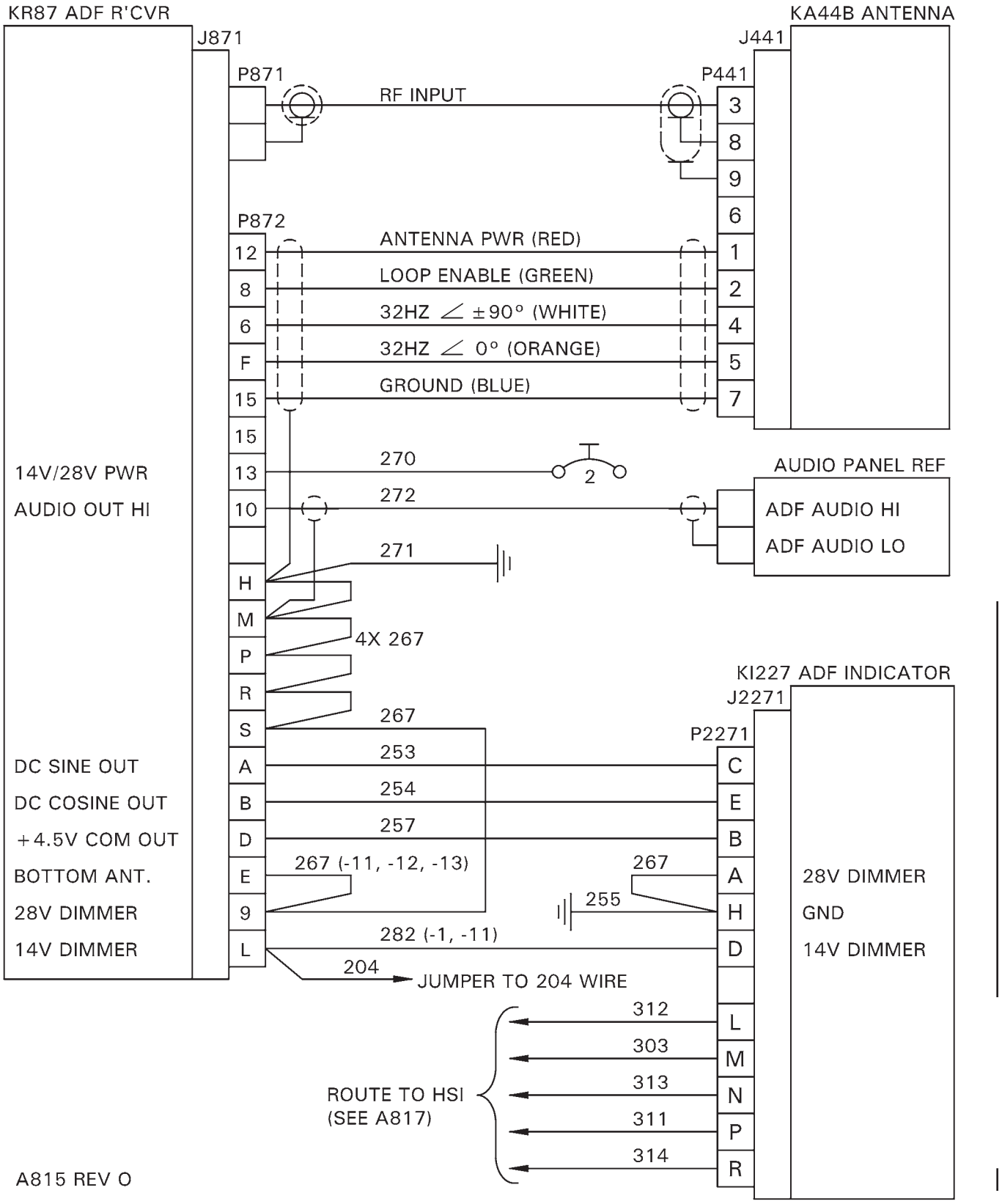

FIGURE 98-4 ADF INSTALLATION

Intentionally Blank

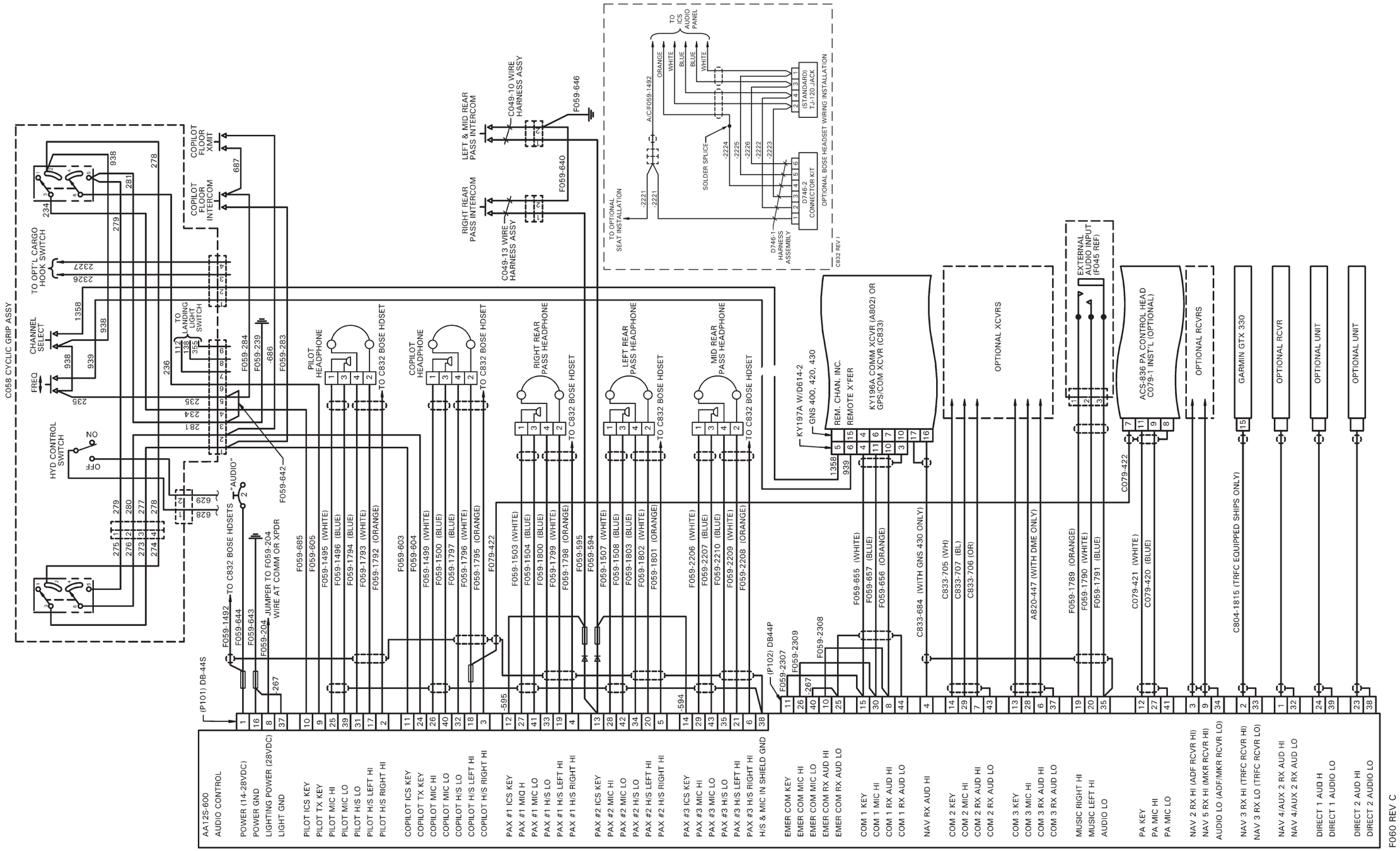

FIGURE 98-5 STANDARD AUDIO INSTALLATION (NAT AA12S-600 AUDIO CONTROL)

Intentionally Blank

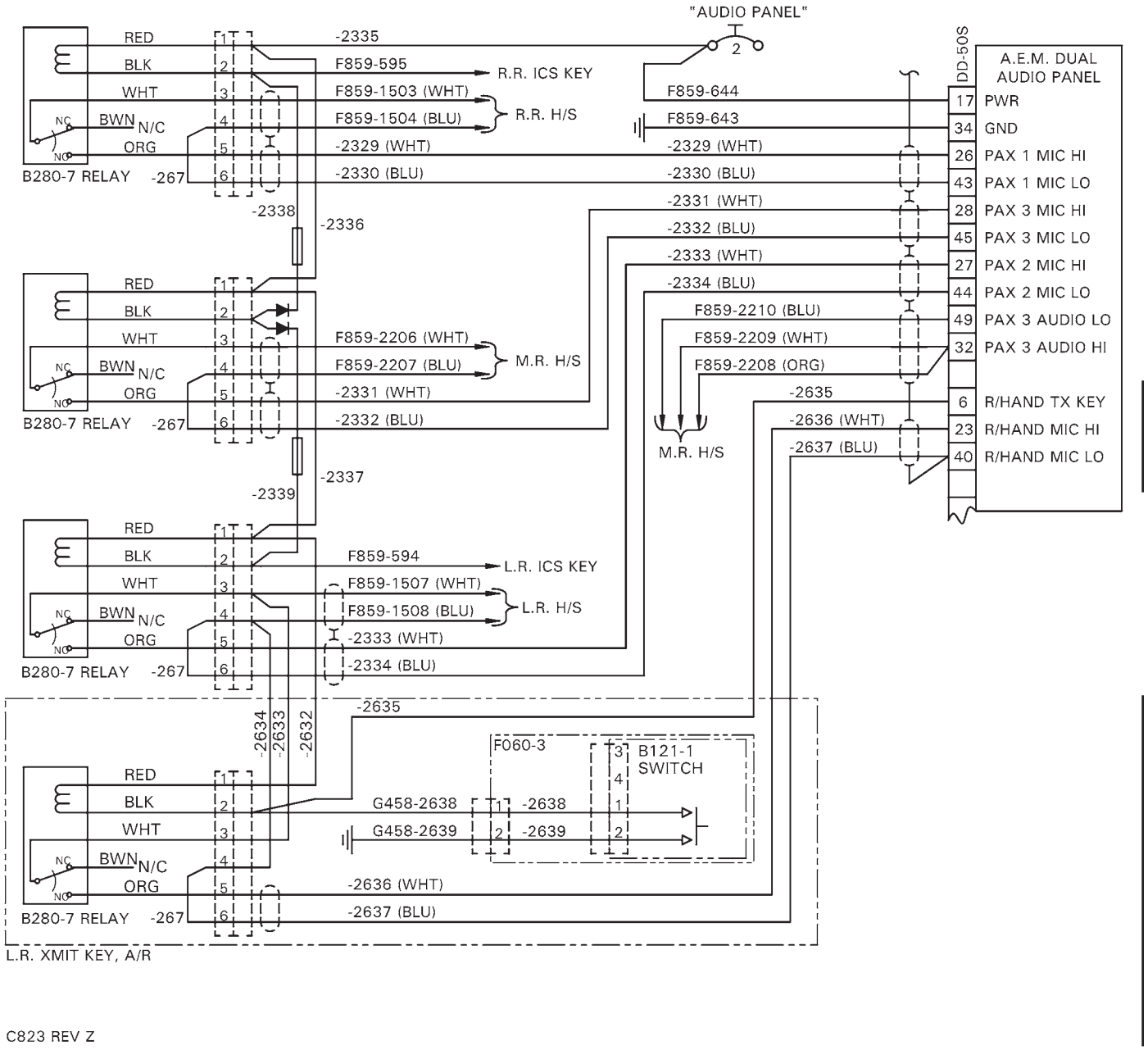

FIGURE 98-6 DUAL AUDIO CONTROL INSTALLATION

Intentionally Blank

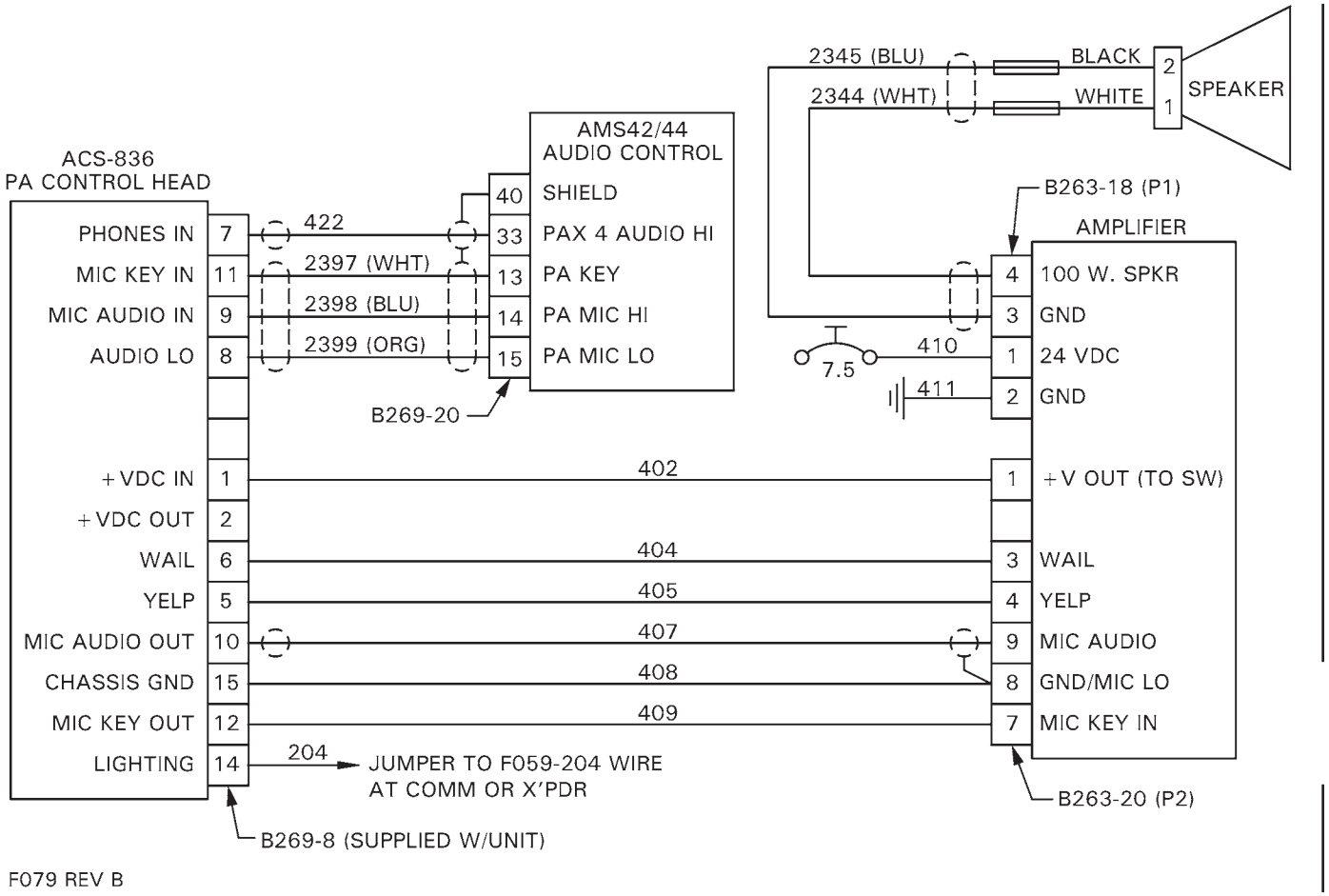

FIGURE 98-7 PA/SIREN INSTALLATION

Intentionally Blank

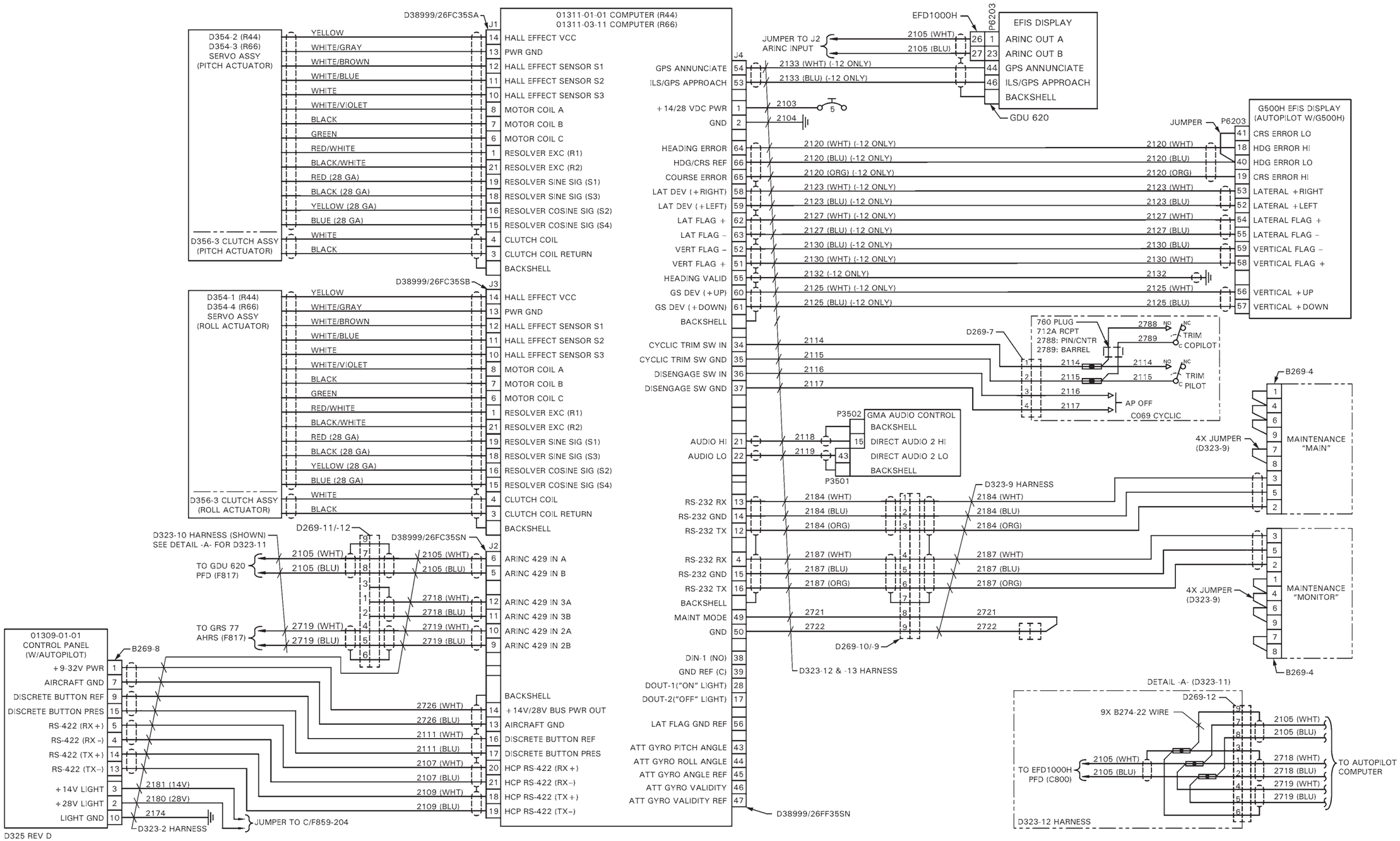

FIGURE 98-8 AUTOPILOT INSTALLATION

Intentionally Blank

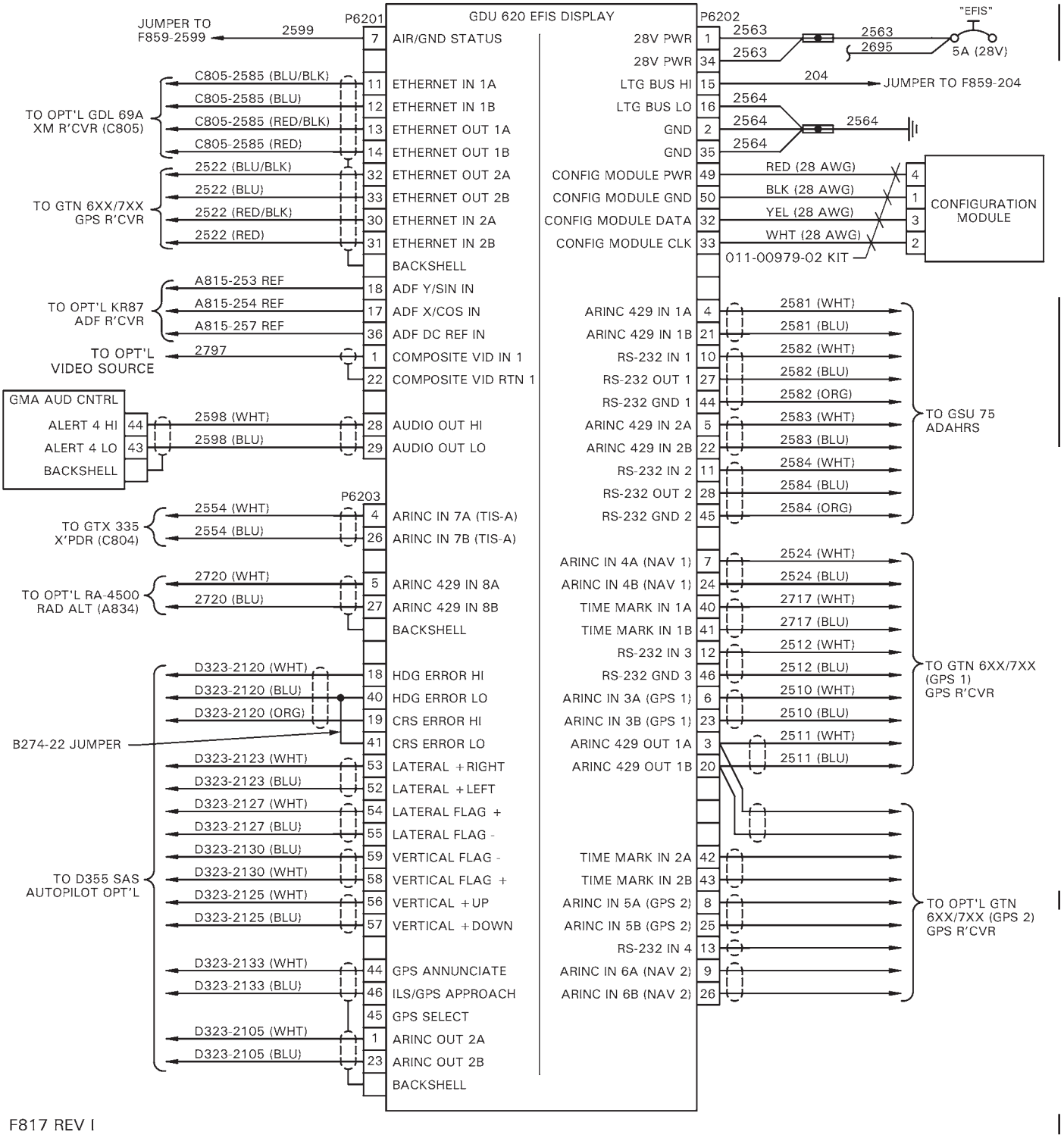

FIGURE 98-9 GARMIN GDU 620 DISPLAY INSTALLATION

Intentionally Blank

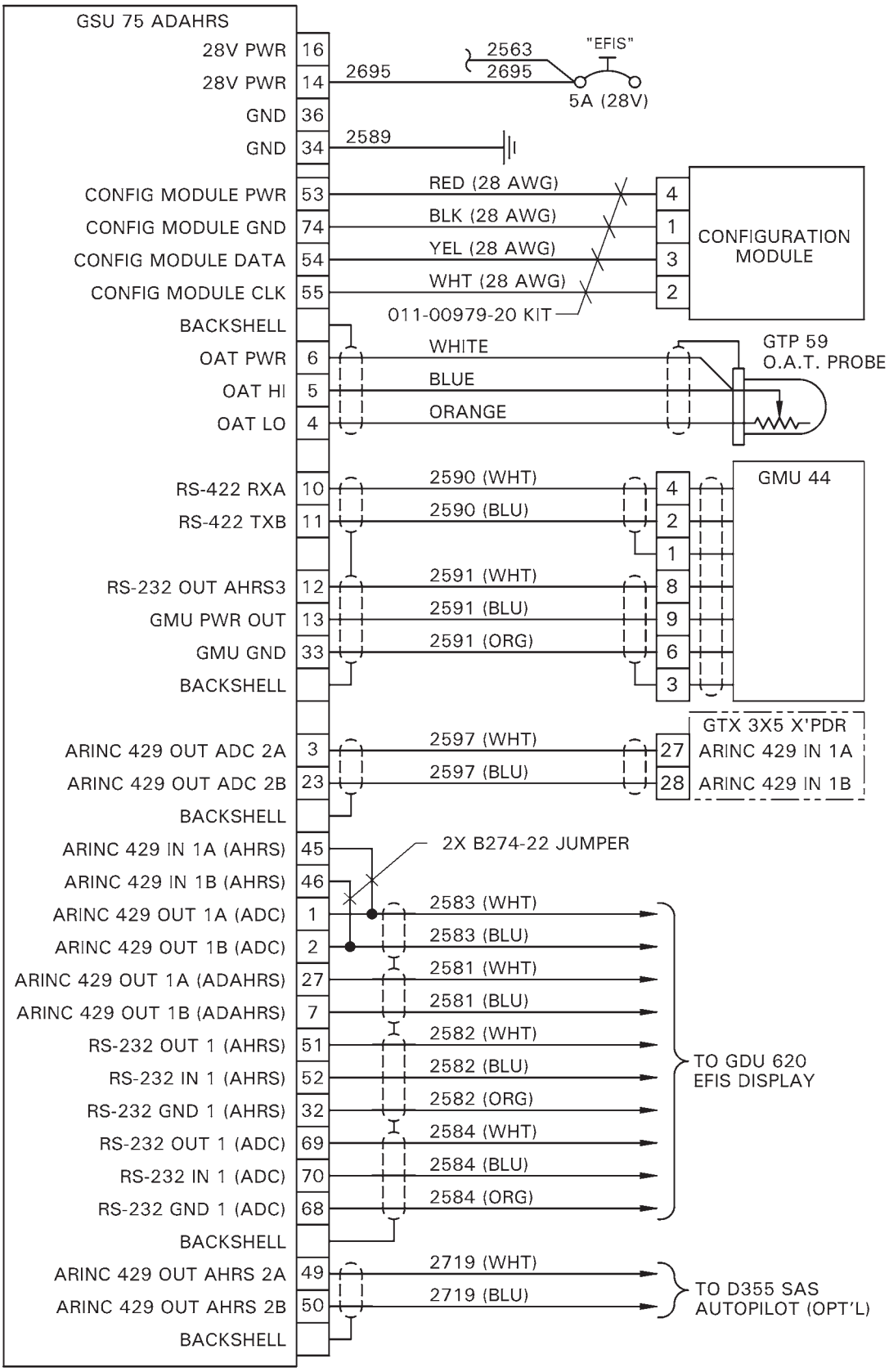

FIGURE 98-10 GARMIN GSU 75 ADAHRS INSTALLATION

Intentionally Blank

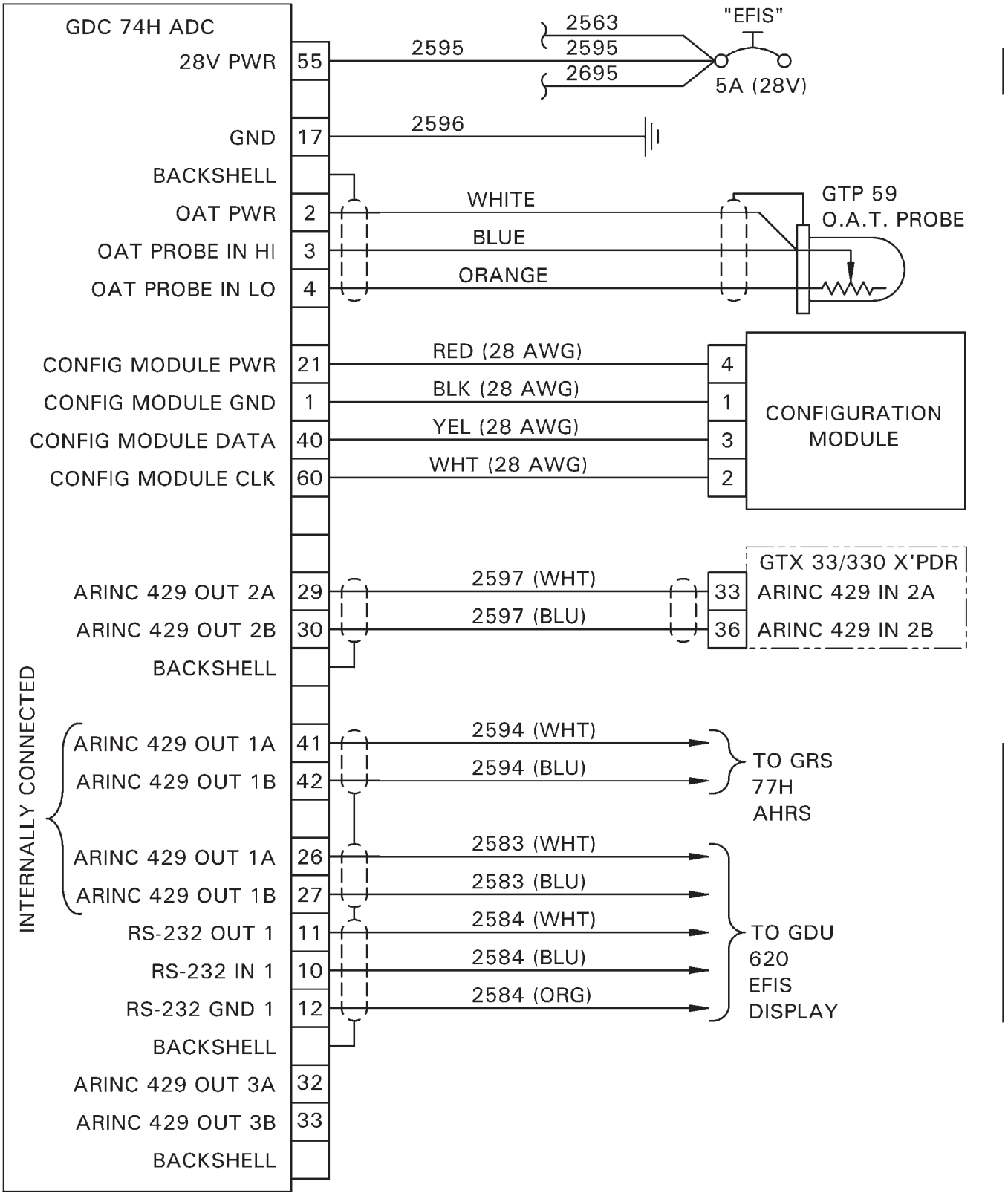

F817 REV E

FIGURE 98-11 GARMIN GDC 74H AIR DATA COMPUTER INSTALLATION

Intentionally Blank

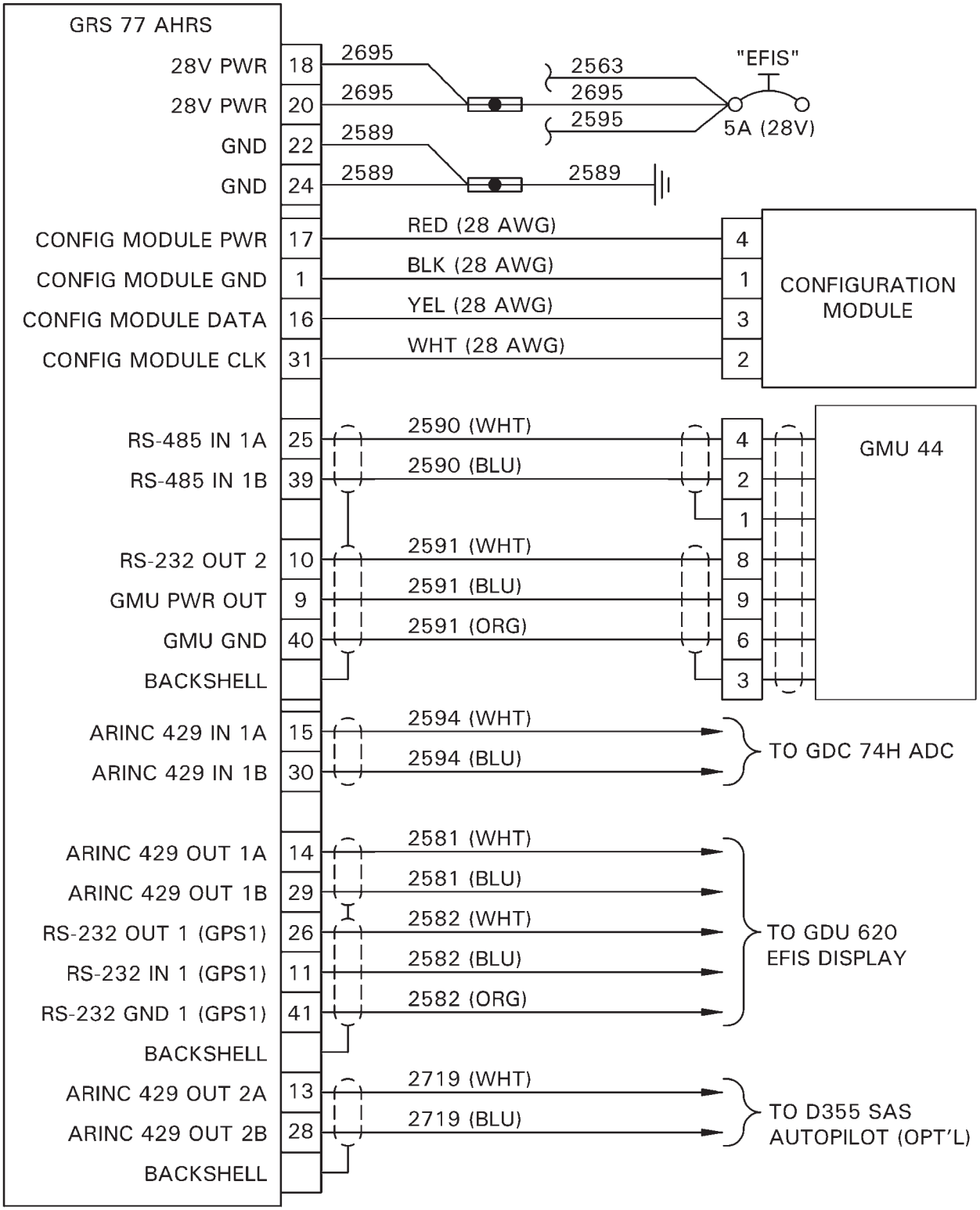

FIGURE 98-12 GARMIN GRS 77H AHRS INSTALLATION

Intentionally Blank

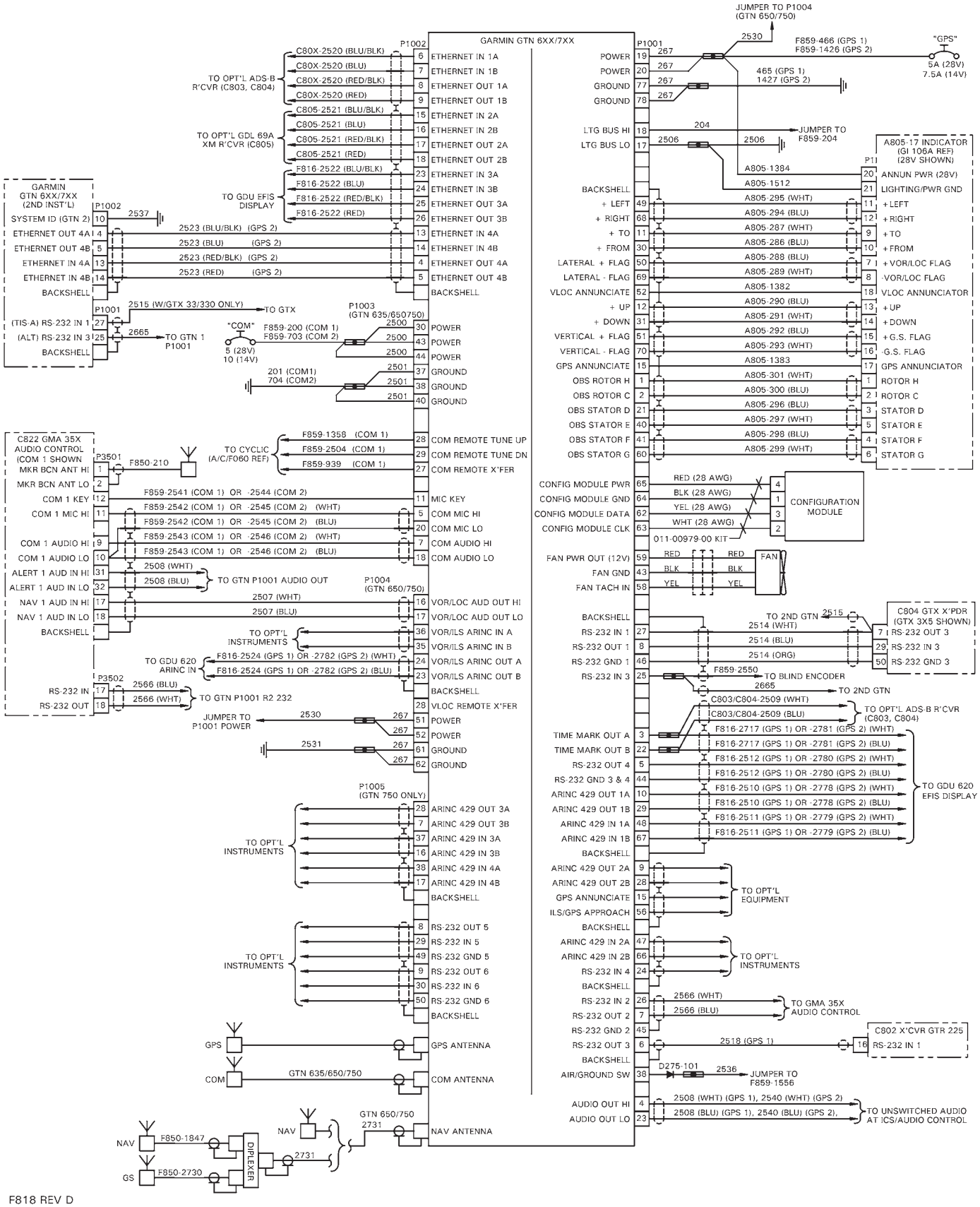

FIGURE 98-13 GARMIN GTN 6XX/7XX-SERIES GPS INSTALLATION (G500H EFIS)

Intentionally Blank

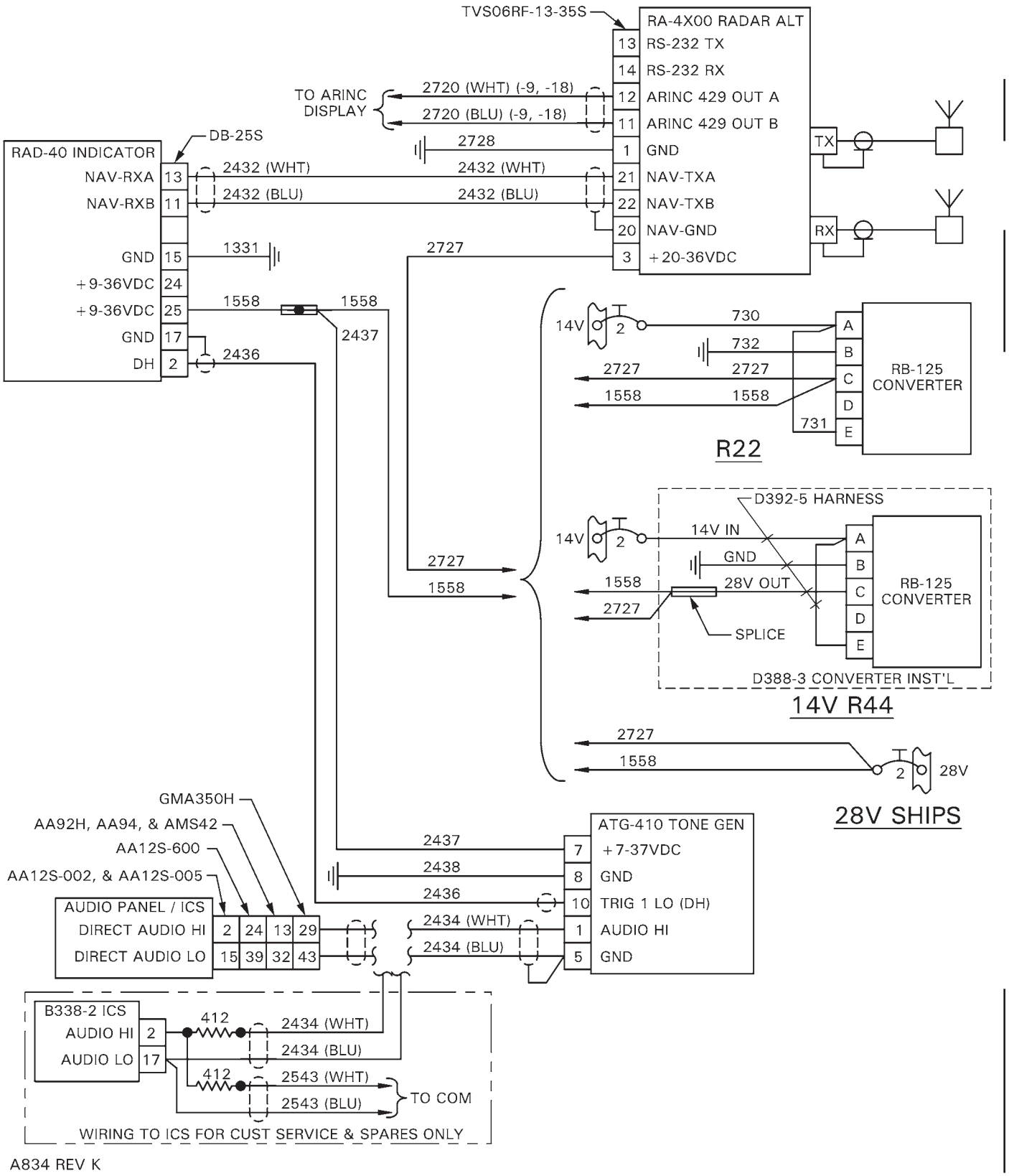

FIGURE 98-14 RADAR ALTIMETER INSTALLATION

Intentionally Blank

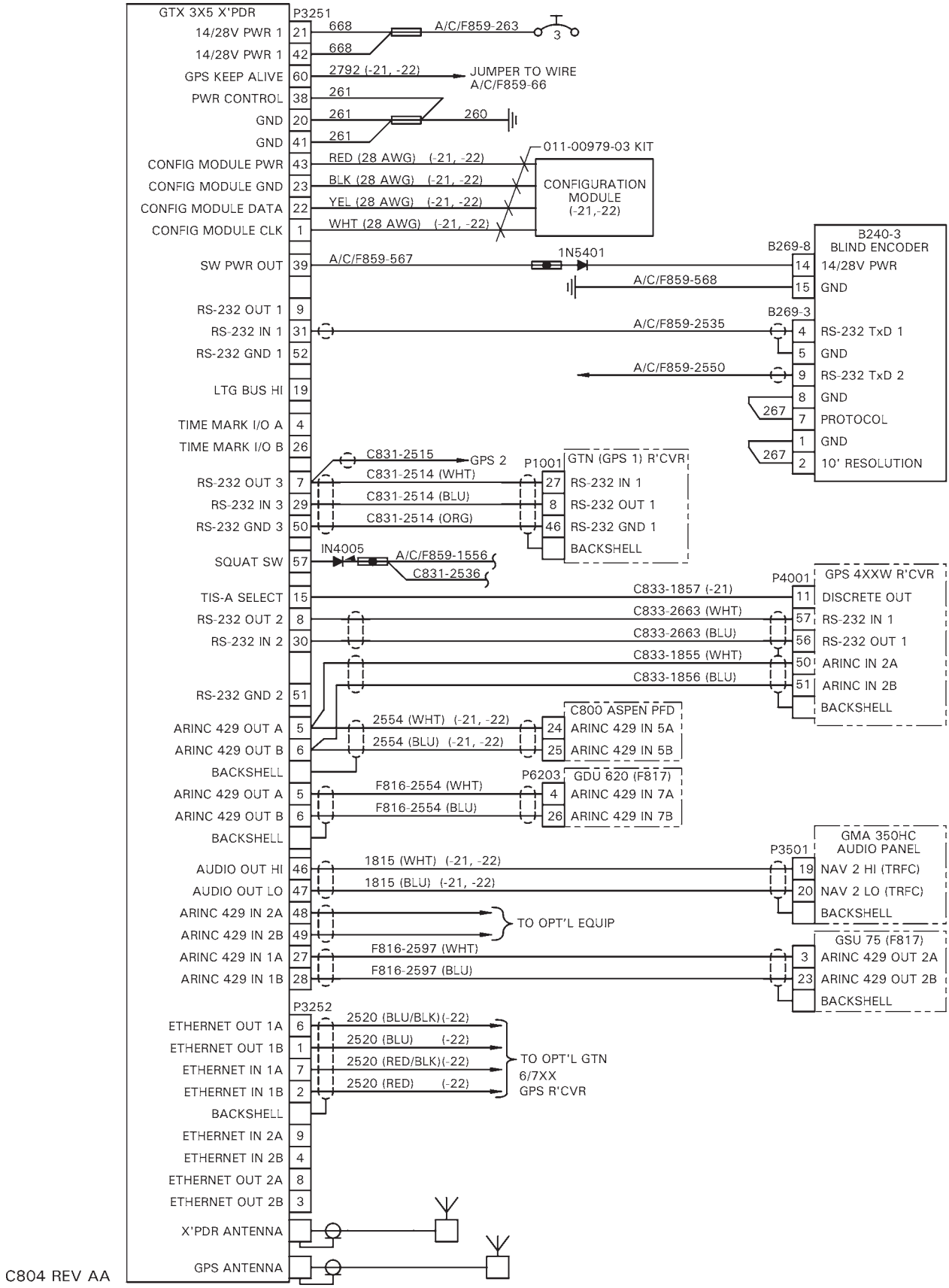

FIGURE 98-15 GARMIN GTX 3X5 TRANSPONDER INSTALLATION

Intentionally Blank

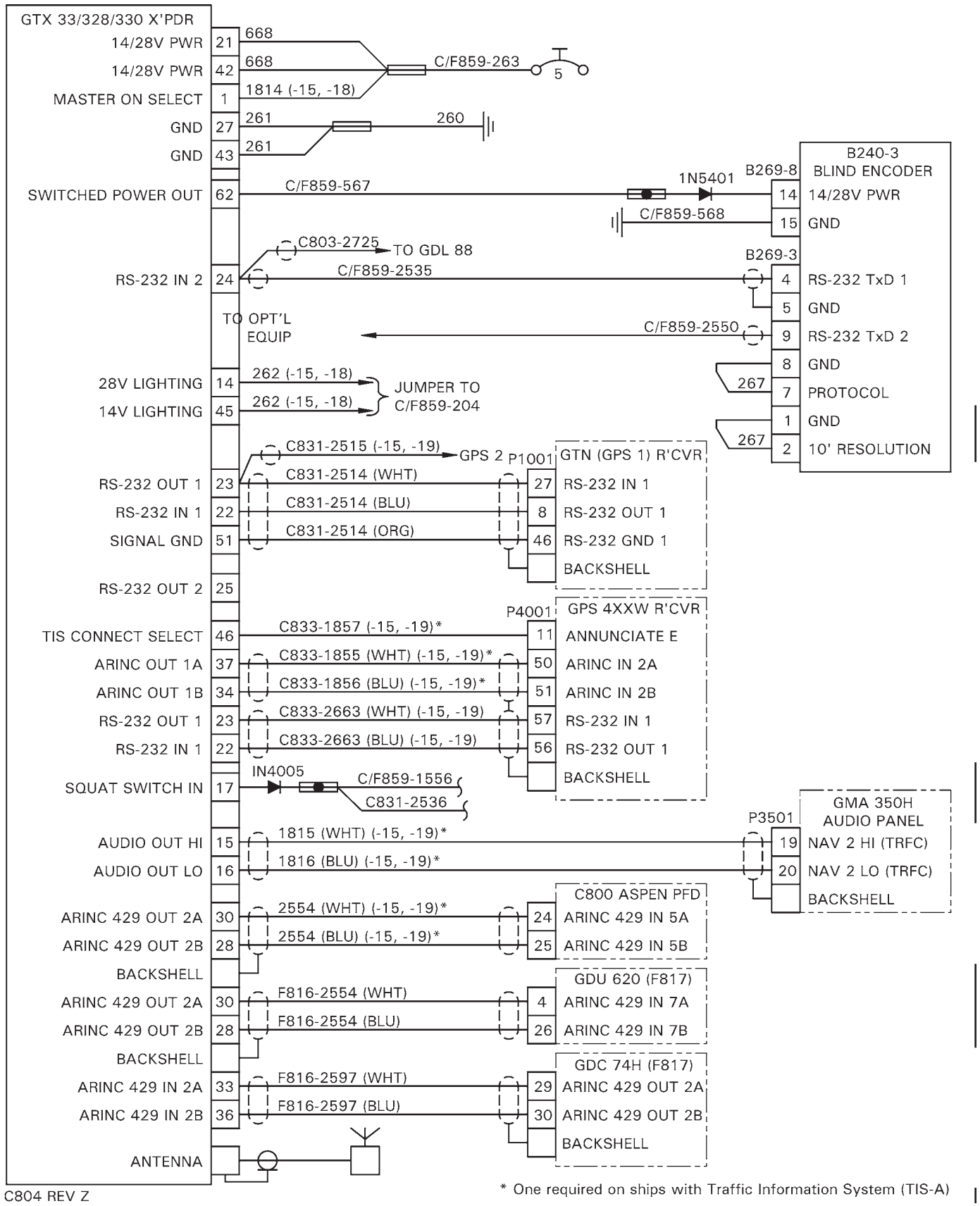

FIGURE 98-16 GARMIN GTX 33/328/330 ES TRANSPONDER INSTALLATION

Intentionally Blank

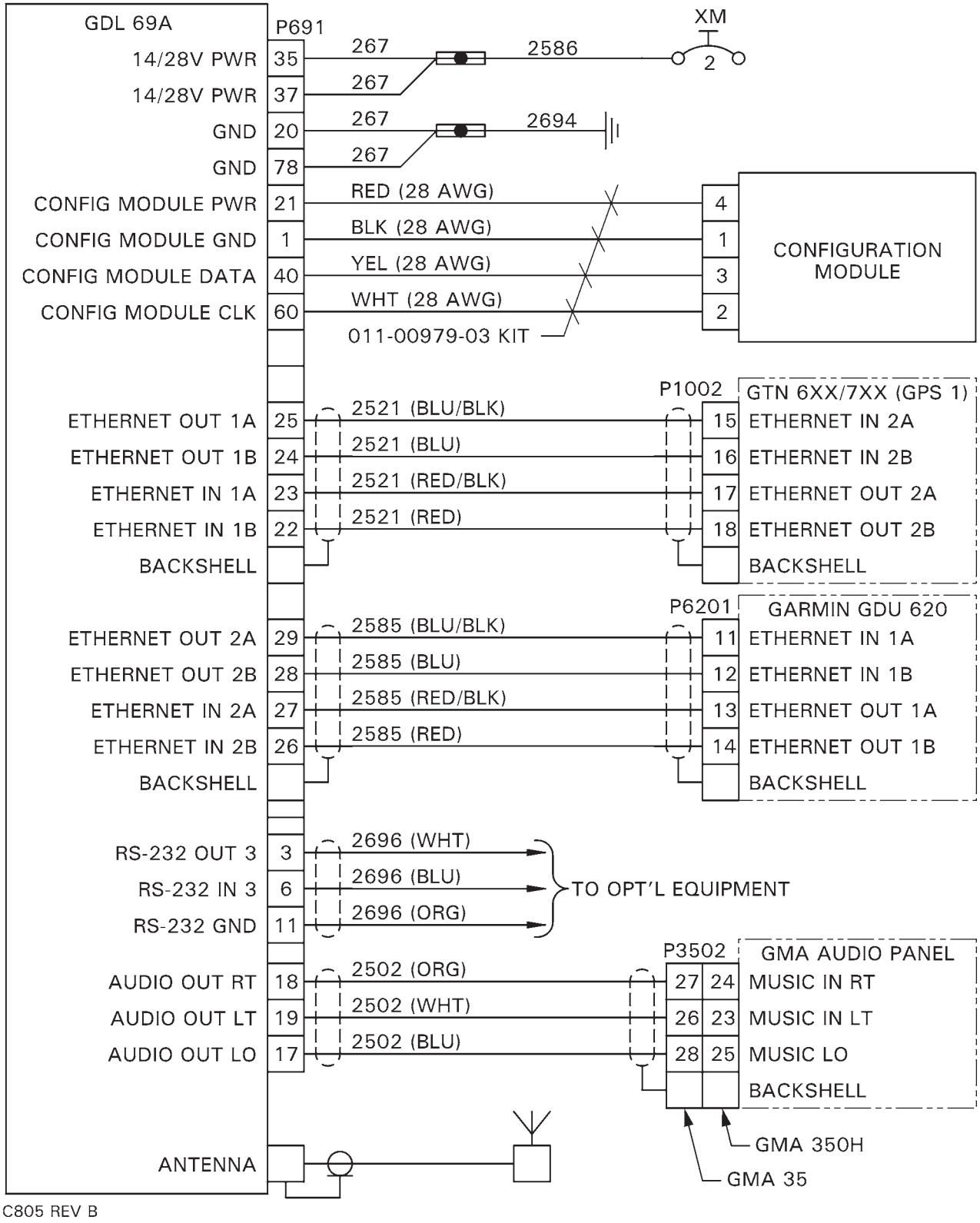

FIGURE 98-17 GARMIN GDL 69A XM RECEIVER INSTALLATION

Intentionally Blank

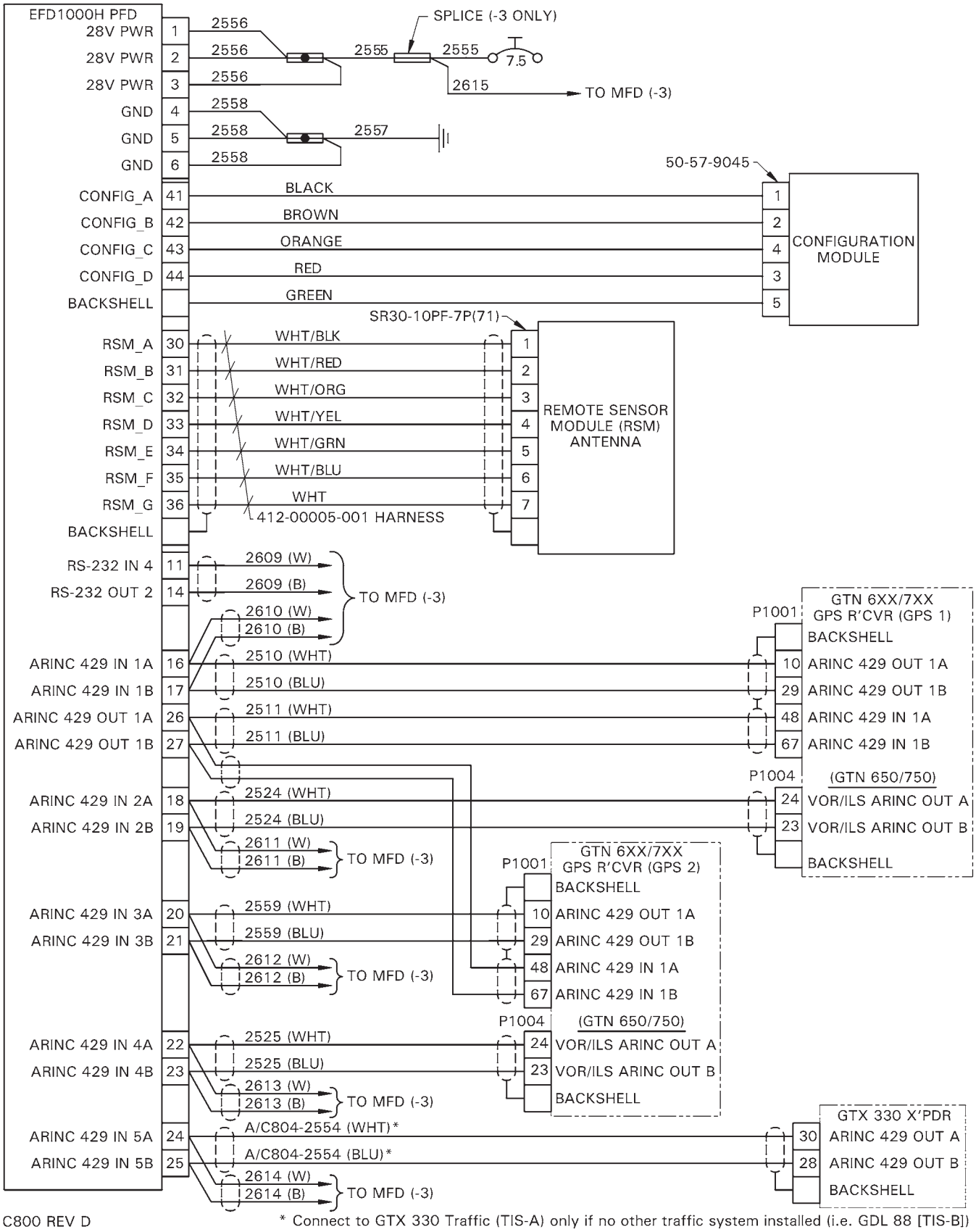

FIGURE 98-18 ASPEN EFD1000H DISPLAY INSTALLATION

Intentionally Blank

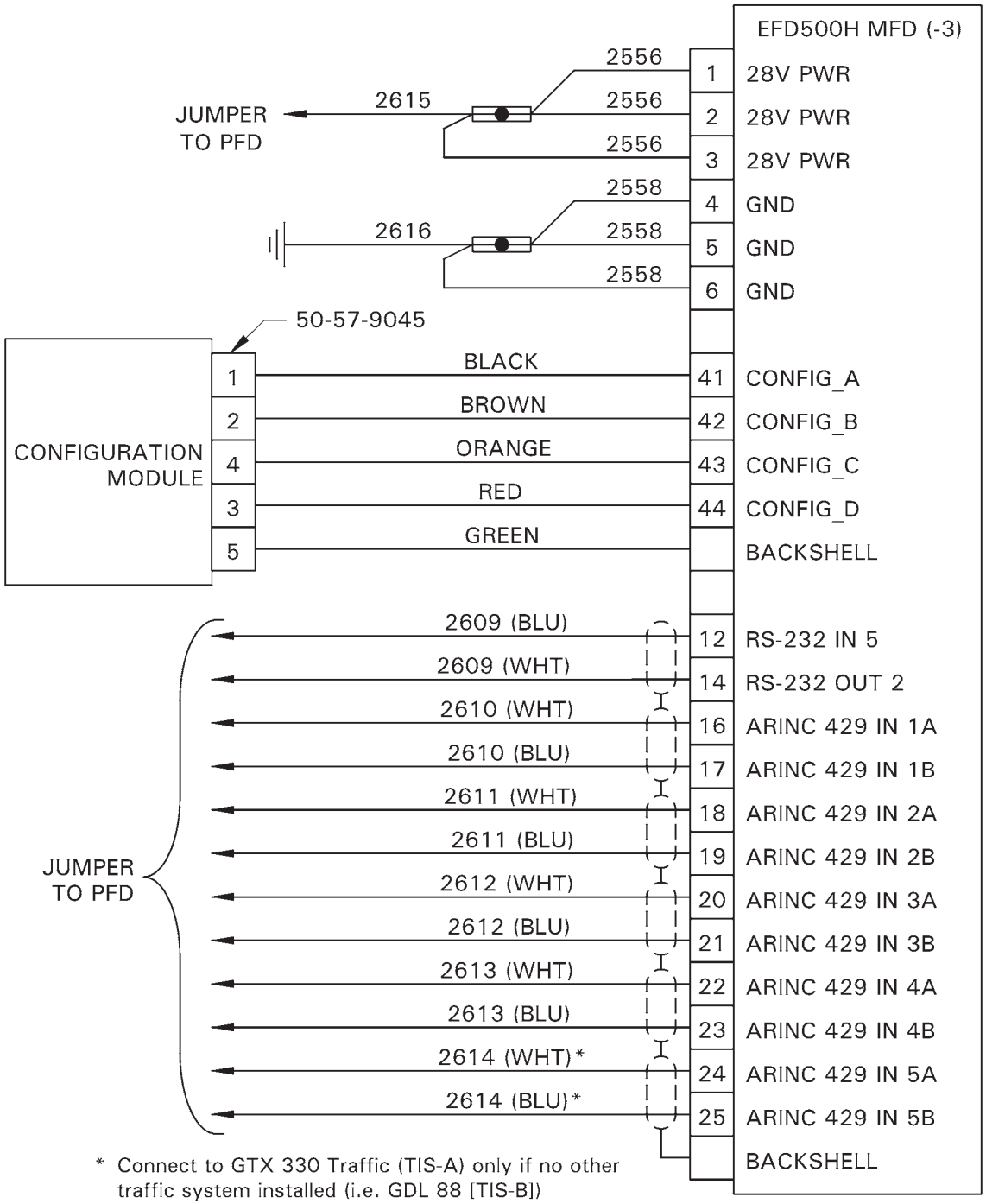

FIGURE 98-19 ASPEN EFD500H DISPLAY INSTALLATION

Intentionally Blank

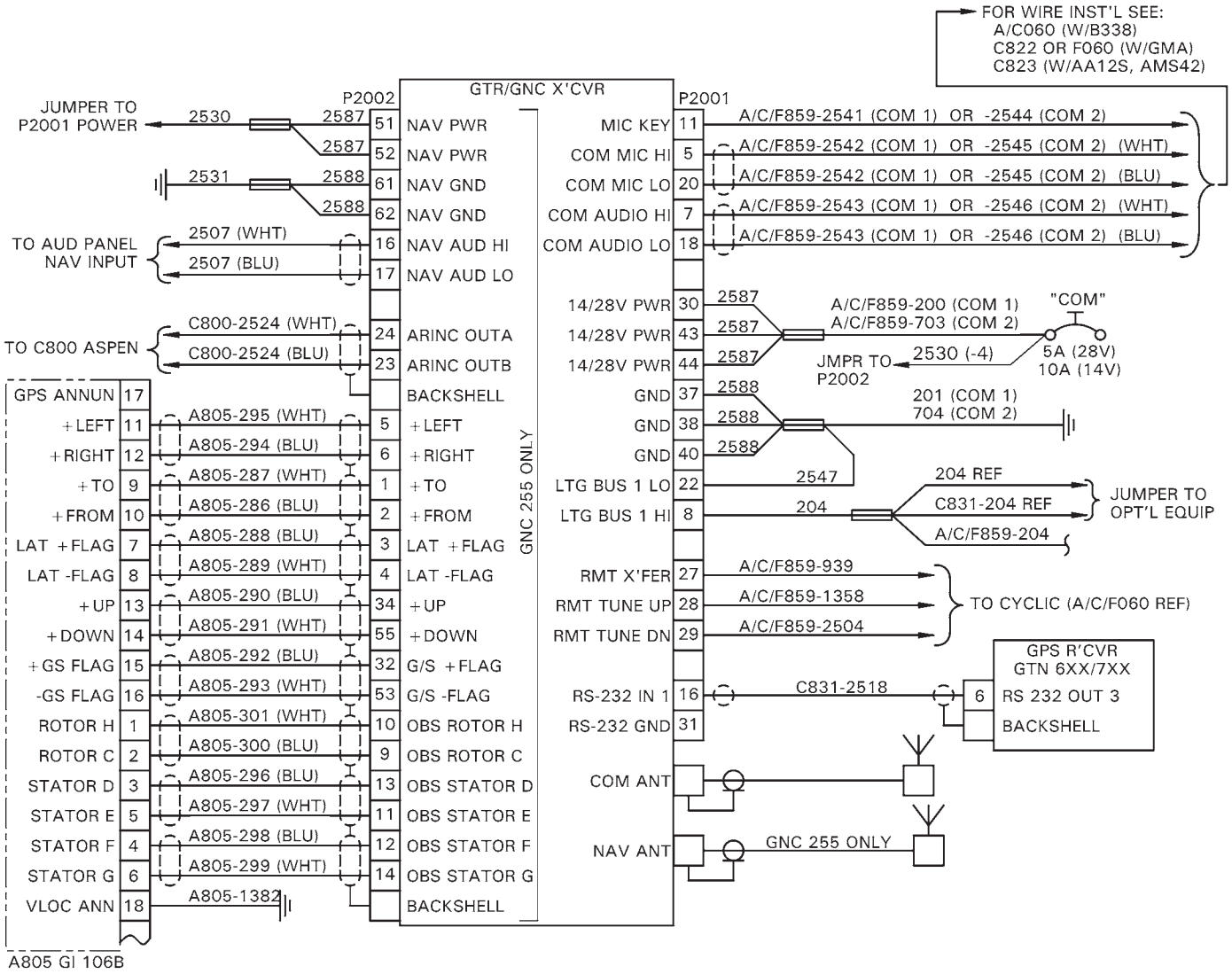

C802-2, & -4 REV E

FIGURE 98-20 GARMIN GTR 225B COM / GNC 255B NAV/COM RADIO INSTALLATION

Intentionally Blank

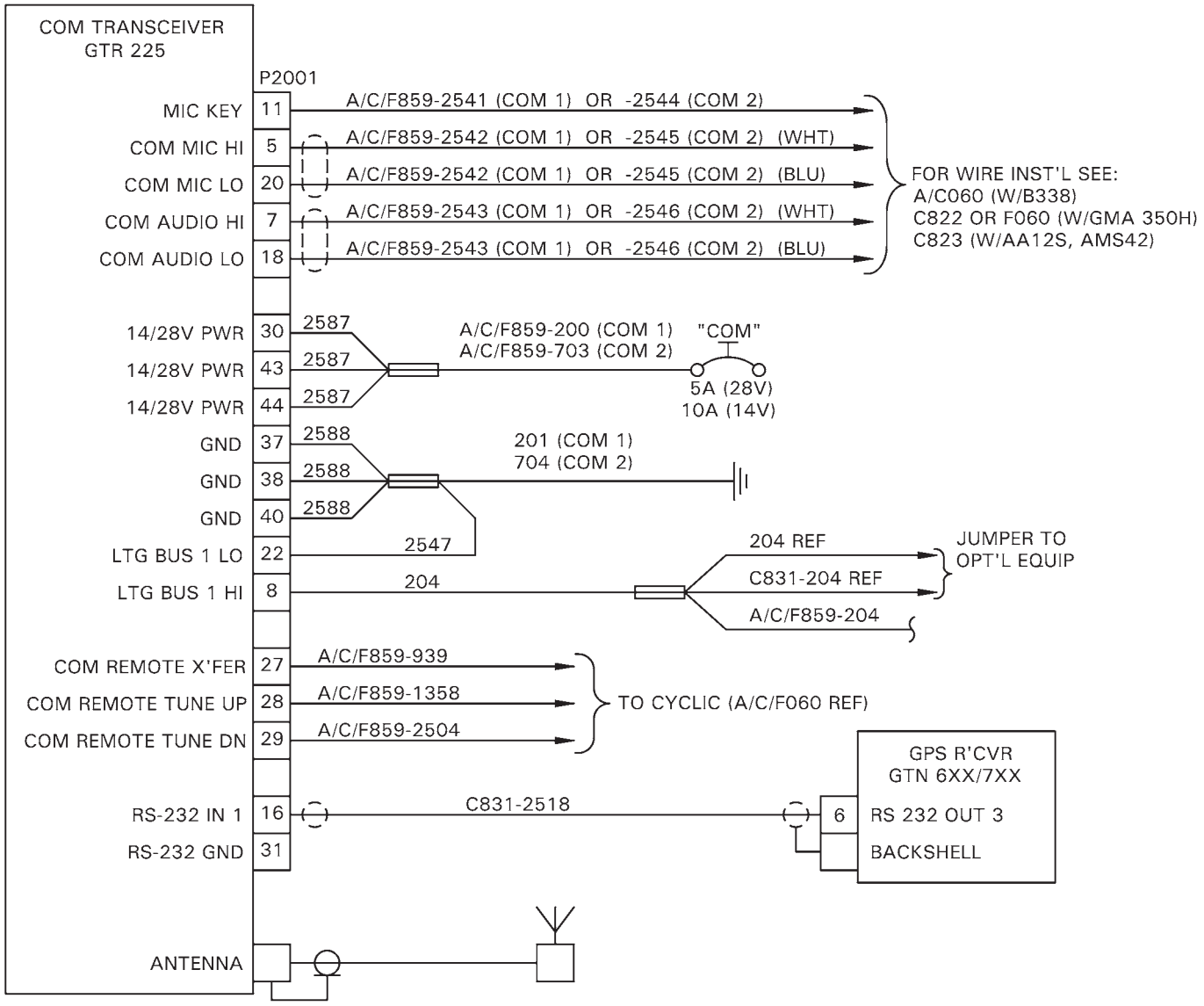

FIGURE 98-21 GARMIN GTR 225B COM RADIO INSTALLATION

Intentionally Blank

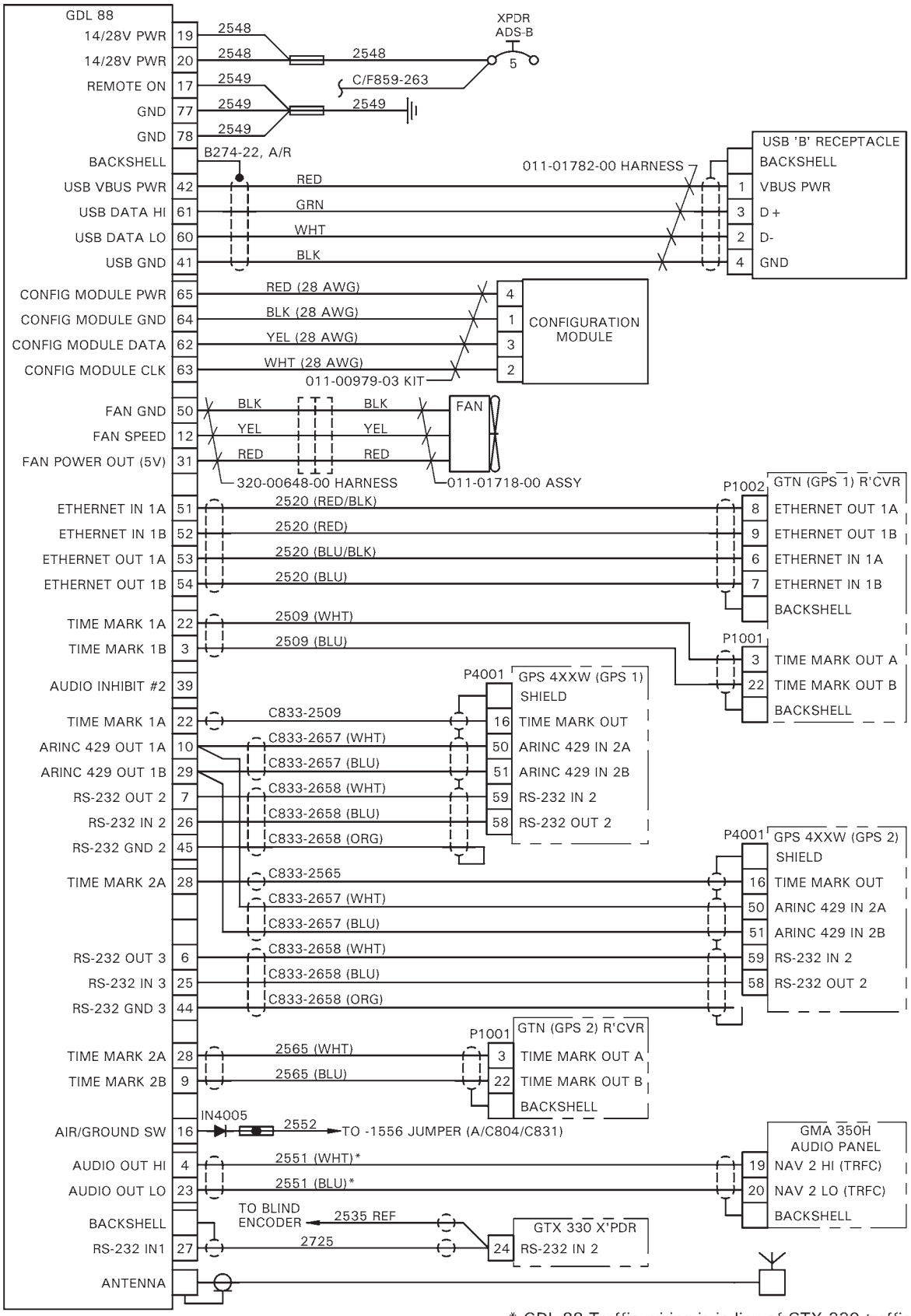

FIGURE 98-22 GARMIN GDL 88 ADS-B IN RECEIVER INSTALLATION

Intentionally Blank

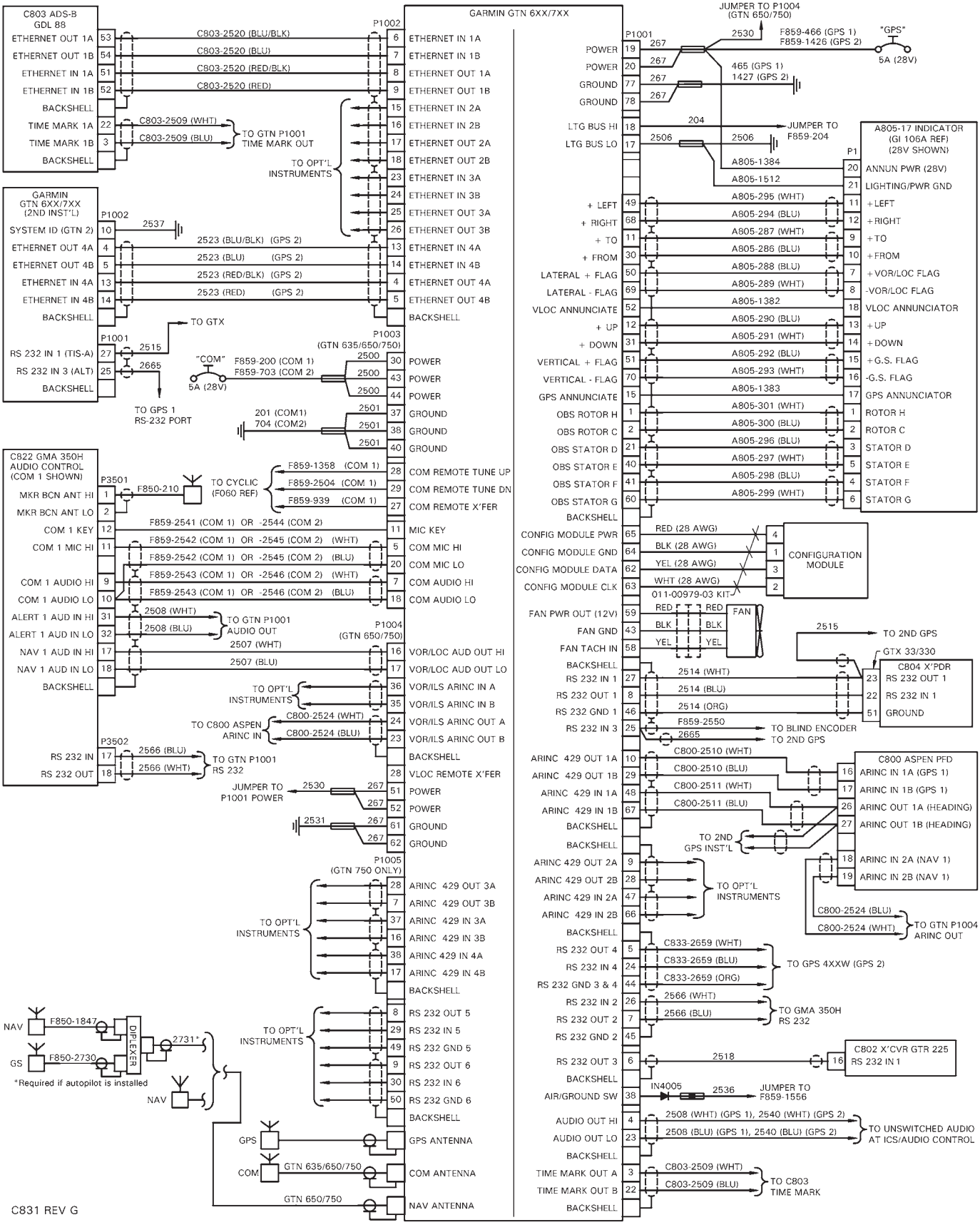

FIGURE 98-23 GARMIN GTN 6XX/7XX-SERIES GPS INSTALLATION (PILOT-SIDE CONSOLE)

Intentionally Blank

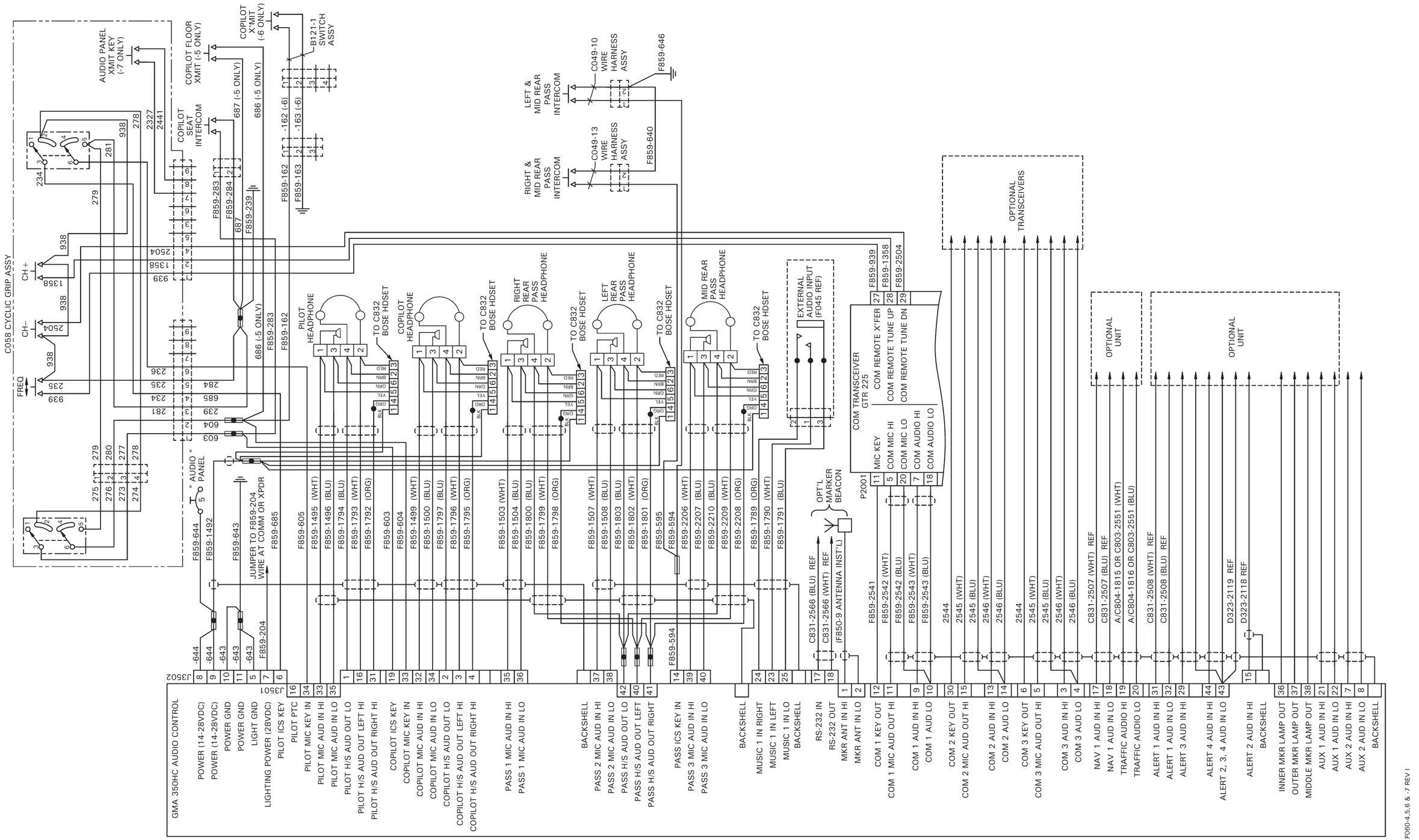

FIGURE 98-24 F060-4 & -5 INTERCOM SYSTEM INSTALLATION (GARMIN GMA 350H AUDIO CONTROL)

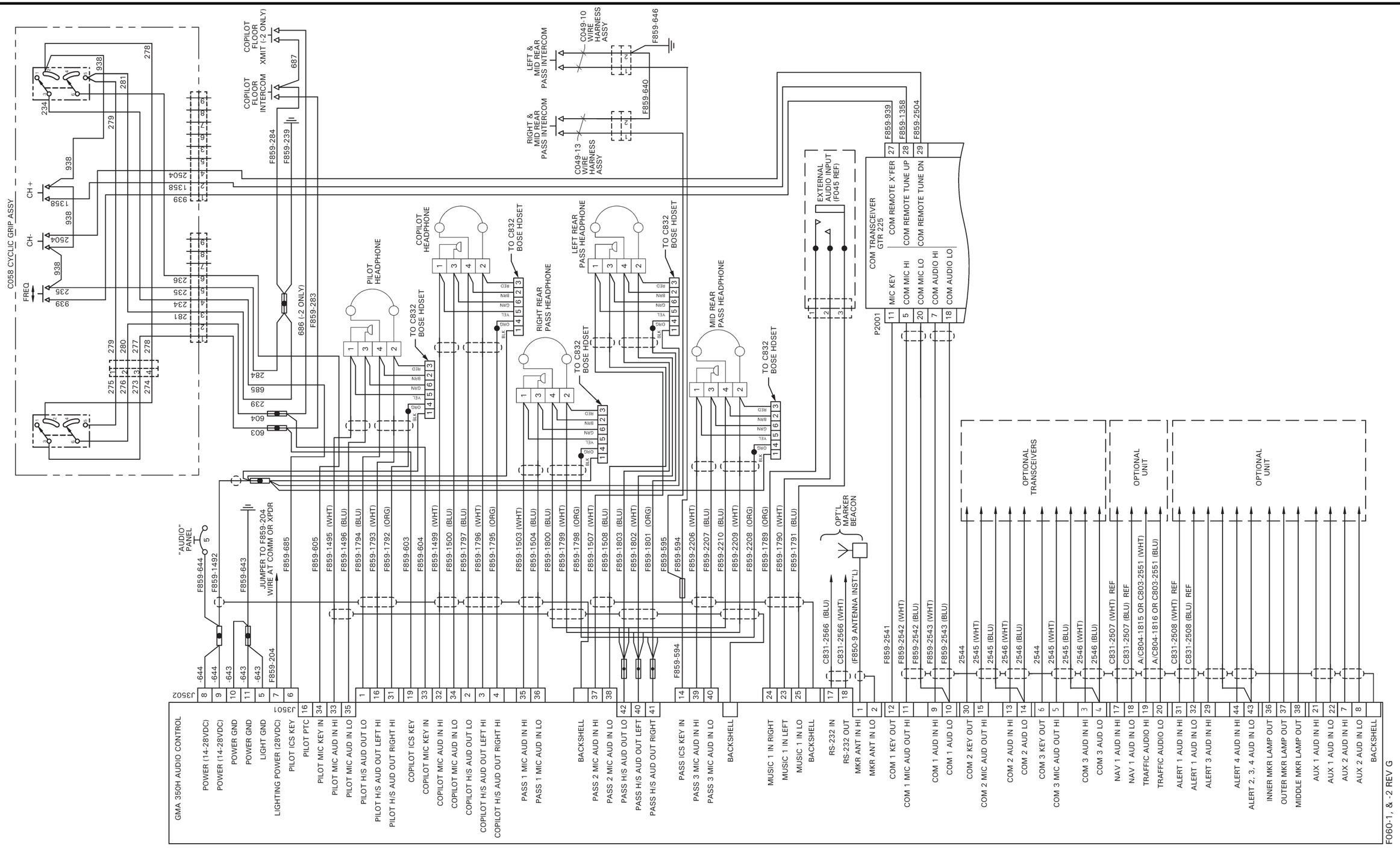

FIGURE 98-25 F060-1 & -2 INTERCOM SYSTEM INSTALLATION (GARMIN GMA 350H AUDIO CONTROL)

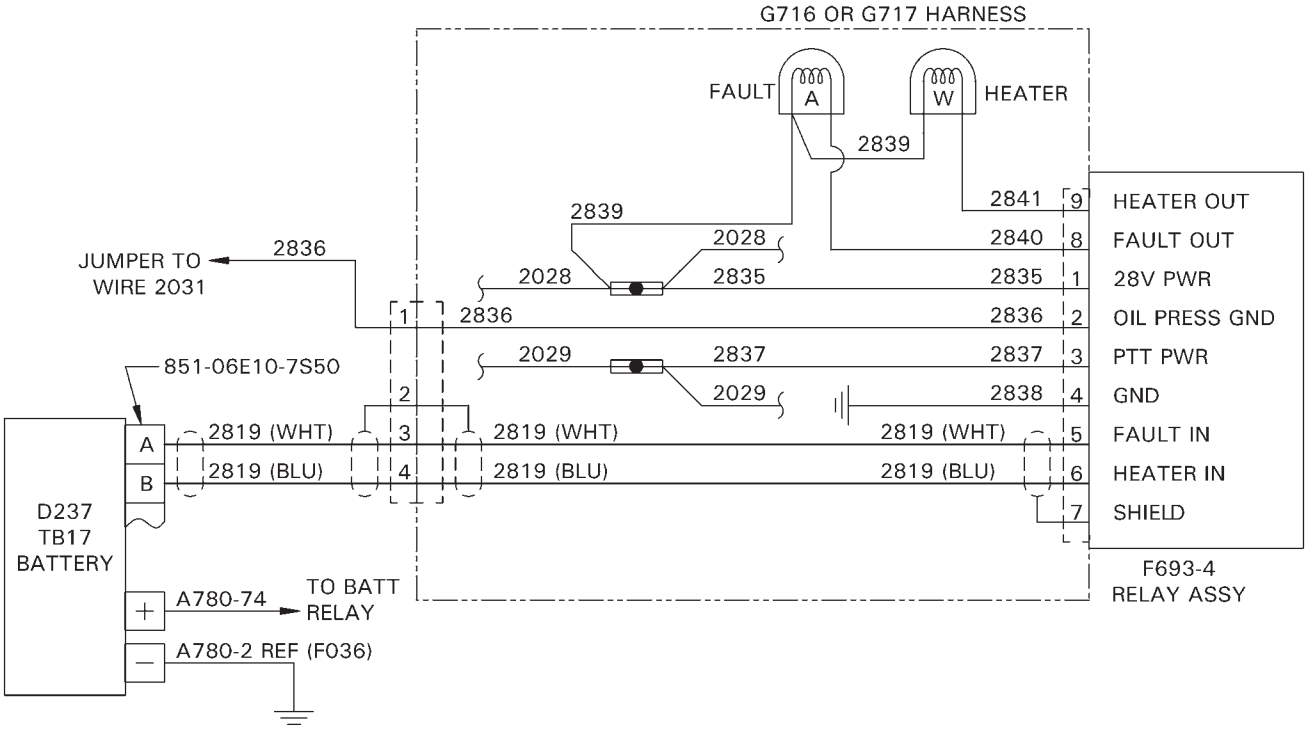

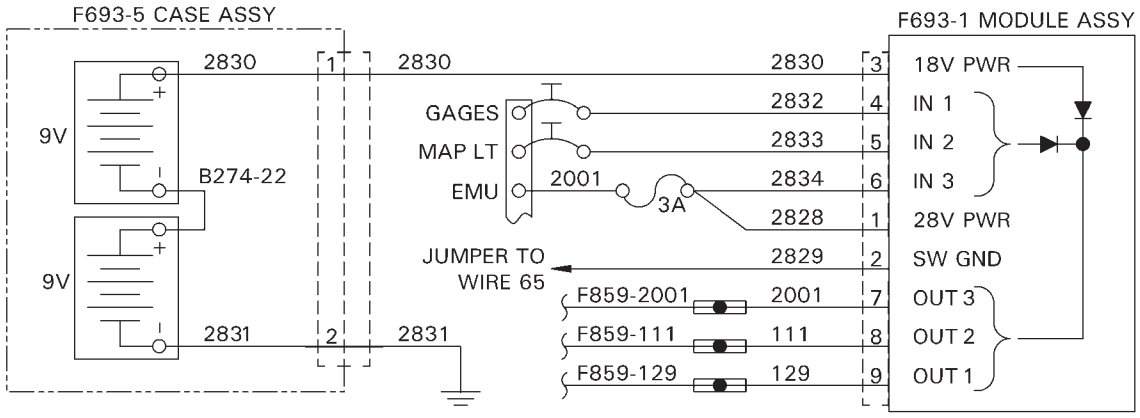

G036 REV B

FIGURE 98-26 LITHIUM-ION BATTERY INSTALLATION

Intentionally Blank

CHAPTER 99

SPECIAL TOOLS

Section	Title	Page
99-10	Special Tools	99.1
99-20	Illustrations and Tasks	99.2

Intentionally Blank

CHAPTER 99

SPECIAL TOOLS

99-10 Special Tools

The following is a list of Robinson R66 special tools.

R66 special tools are to be used in conjunction with the applicable instructions for continued airworthiness, for their designated maintenance task.

99-20 Illustrations and Tasks

Refer to Figure 99-1.

Item	Part Number	Description	Reference
1	MT054-1	Main Gearbox Drain Assembly	MM § 12-11
2	MT122-6	Micrometer Assembly – Main Rotor Hub, Bolt Stretch	MM § 62-10
3	MT146-4	Blocks – Swashplate Rigging (set of 2)	MM § 18-30
4	MT147-1	Bleed Tool – Main Rotor Blade Spindle	MM § 12-51
5	MT179-4	Balancing Bar – Tail Rotor Assembly Static Balance	MM § 64-11
6	MT260-6	Tail Rotor Drive Shaft Runout Attachments Kit	MM § 65-21
7	MT329-6	Plug – Main Rotor Hub Bearing Installation	MM § 62-21

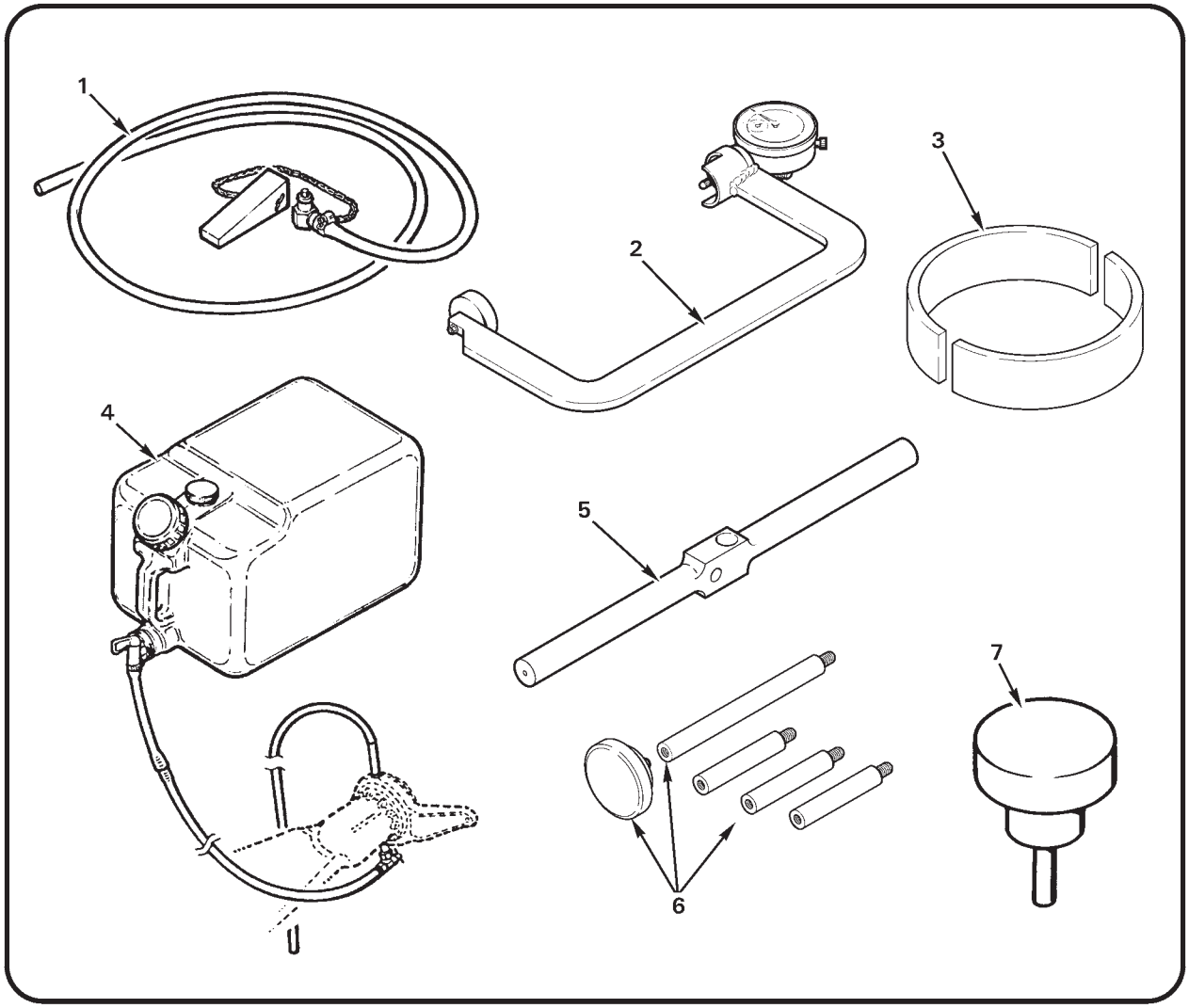

FIGURE 99-1 SPECIAL TOOLS

99-20 Illustrations and Tasks (continued)

Refer to Figure 99-2.

Item	Part Number	Description	Reference
1	MT352-1	Main Rotor Blade Trim Tab Gage	MM § 18-13
2	MT354-4 or -7	Teeter Moment Tool	MM § 62-32
3	MT357-2	0.375-inch diameter Reamer	Various*
4	MT357-3	0.156-inch diameter Cobalt Steel Drill	MM § 62-33
5	MT357-4	Hex Driver (Snap-On Part No. FABL8)	MM § 65-40
6	MT357-5	Torque Adapter (Snap-On Part No. FRDH101)	MM § 65-40
7	MT359-1	Spring Scale (0-30 lb)	MM §§ 62-32, 67-22, & 67-41

* Ream bore after installation of A139-1 bearing to 0.376-0.375 inch diameter.

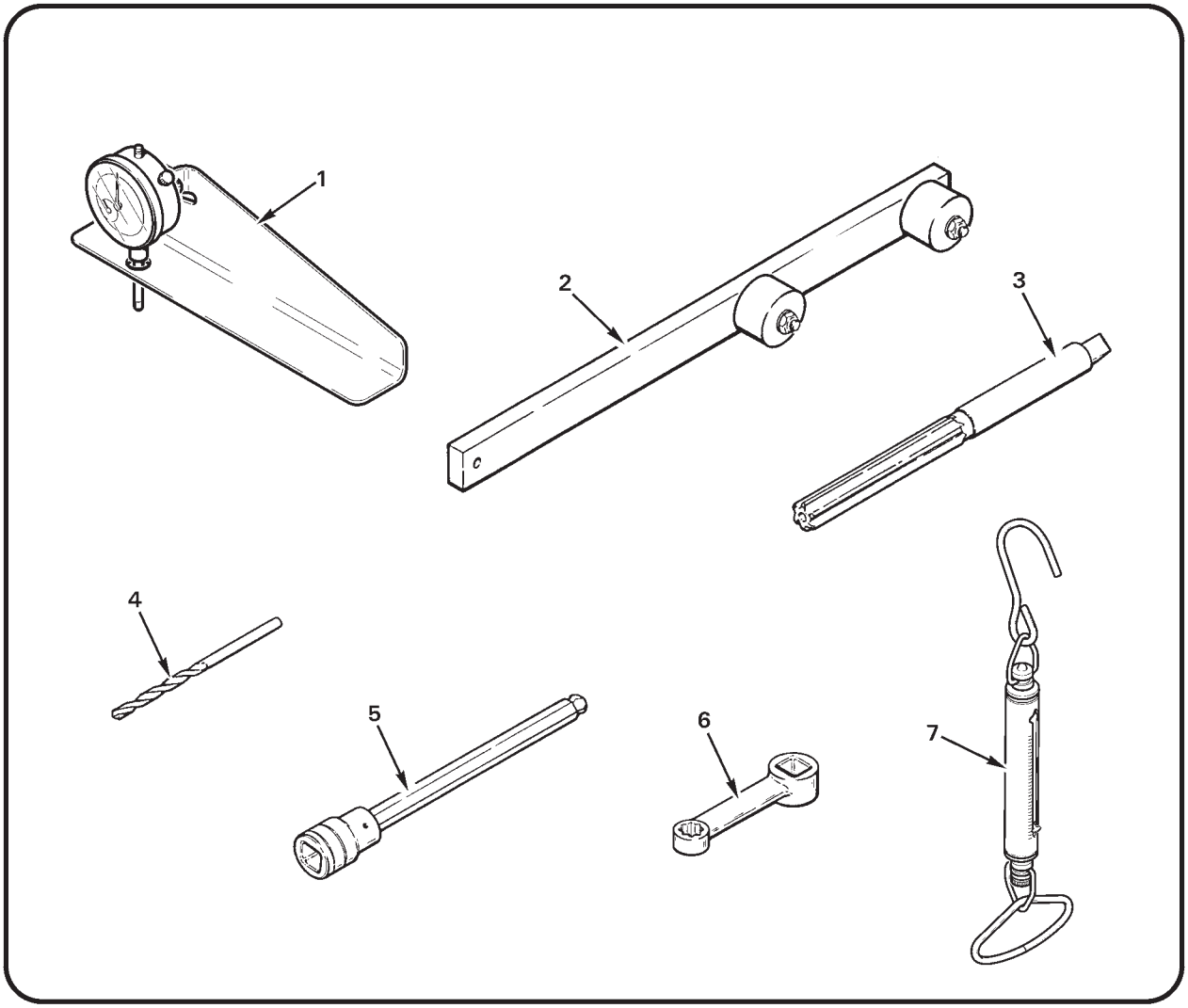

FIGURE 99-2 SPECIAL TOOLS

99-20 Illustrations and Tasks (continued)

Refer to Figure 99-3.

Item	Part Number	Description	Reference
1	MT384-1	Hydraulic Test Pump (U.S / Canada / Mexico – 110 V)	MM § 12-33
2	MT384-2	Hydraulic Test Pump (Outside North America – 220 V)	MM § 12-33
3	MT525-7	Main Rotor Blade Rigging Fixture	MM § 18-40
4	MT525-9	Tail Rotor Blade Rigging Fixture	MM § 18-60
5	MT526-8	Bender Assembly – Trim Tab, Main Rotor Blade (aluminum)	MM § 18-13
6	MT527-1	Helicopter Lifting Fixture	MM § 7-20
7	MT548-8	Fitting (engine hoist adapter)	MM § 71-10

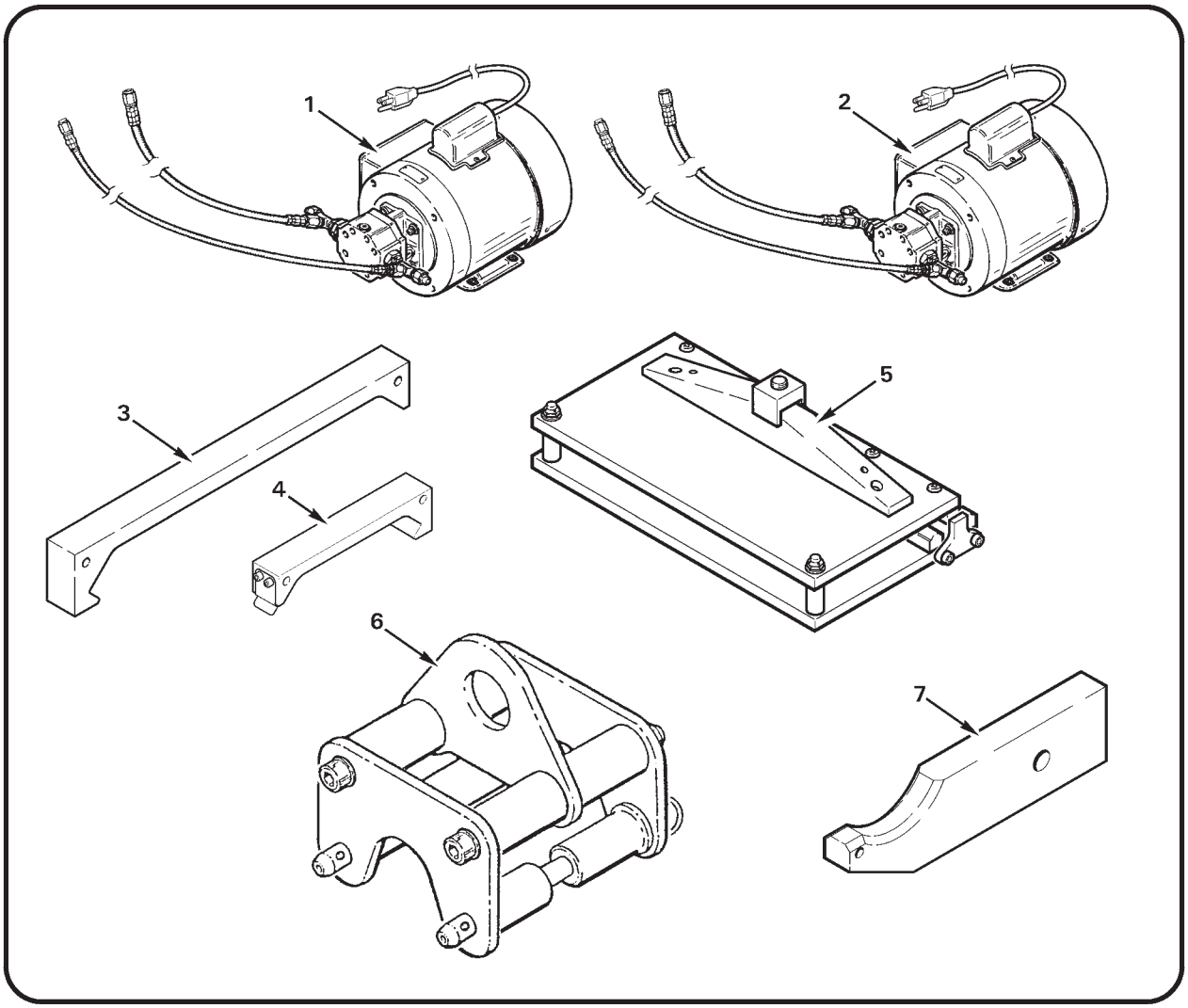

FIGURE 99-3 SPECIAL TOOLS

99-20 Illustrations and Tasks (continued)

Refer to Figure 99-4.

Item	Part Number	Description	Reference
1	MT549-1	Spacer – Spindle Boot (set of 2)	MM § 62-10
2	MT549-2	Plate – Spindle Boot	MM § 62-10
3	MT556-11	Kit Tools – Tail Rotor Hub Bearing Replacement	MM § 64-41
4	MT569-2	Guide Assembly – Drill (main rotor hub nut)	MM § 62-33
5	MT643-1	Support Weldment – Main Rotor Hub Bearing Installation	MM § 62-21
6	MT759-1	Blocks – Cyclic Rigging	MM § 18-41
7	2020HR	ACES Probalancer Analyzer (or equivalent dynamic balancer)	MM § 18-10

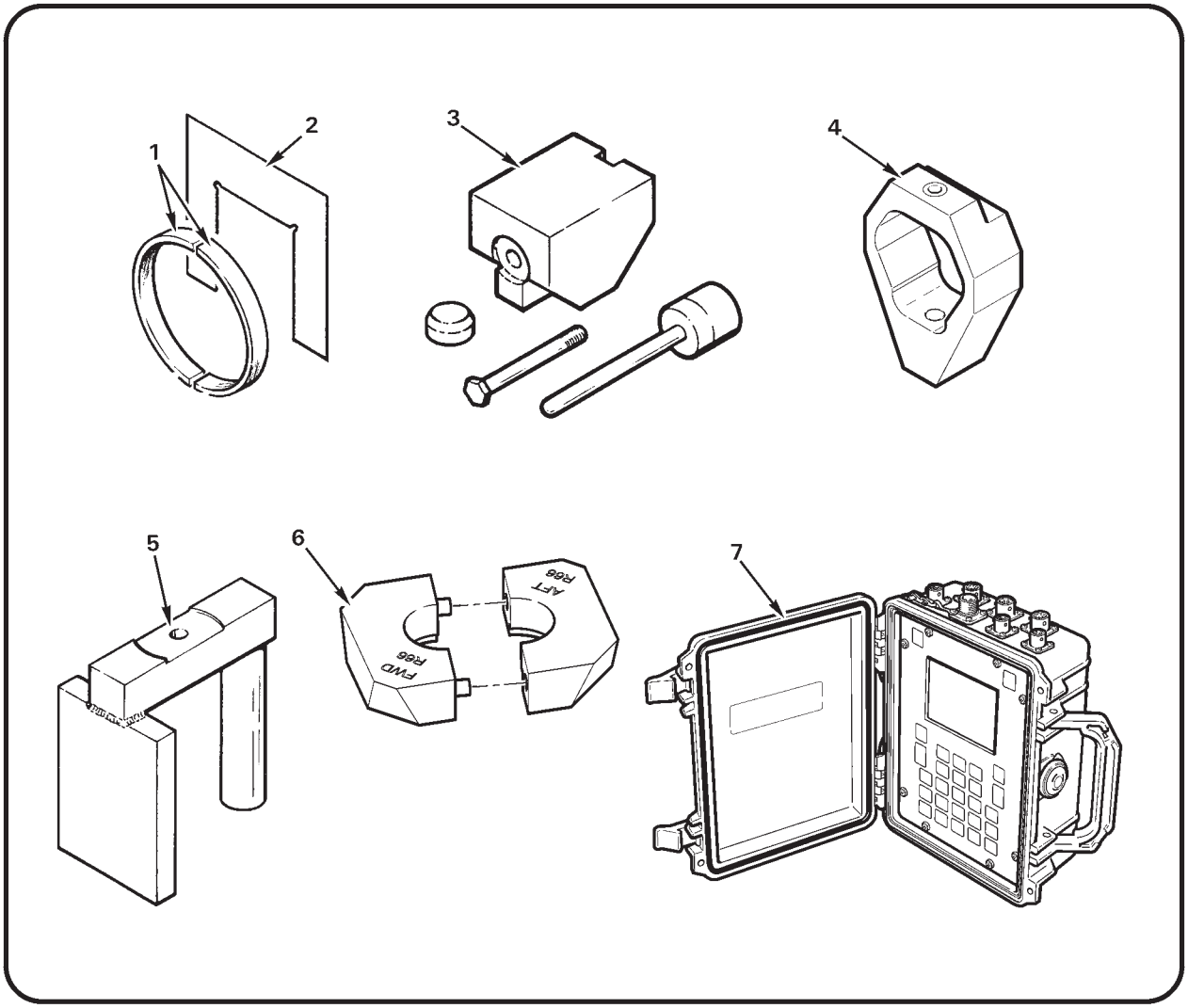

FIGURE 99-4 SPECIAL TOOLS

99-20 Illustrations and Tasks (continued)

Refer to Figure 99-5.

Item	Part Number	Description
1	MT850-1	Engine Stand Assembly (RR300)
2	AN970-4*	Washer – Tap Test Tool
3	MT990-1 MT990-2	Charger Assembly (BatteryMinder – 24 VDC, 120 VAC, 50/60 Hz) Charger Assembly (BatteryMinder – 24 VDC, 240 VAC, 50/60 Hz)

* Or 1965 or later U.S. quarter dollar coin in good condition.

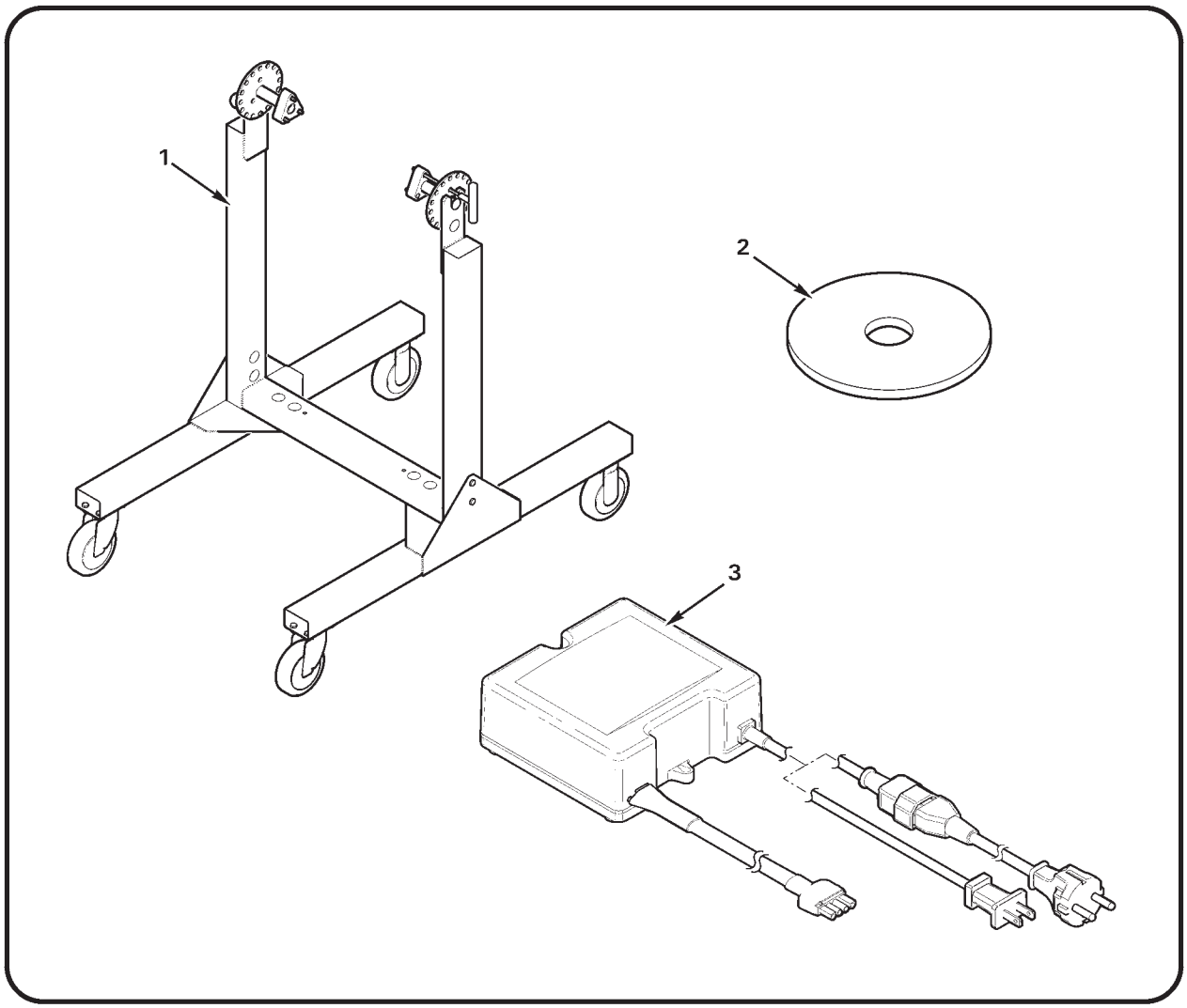

FIGURE 99-5 SPECIAL TOOLS

99-20 Illustrations and Tasks (continued)

Refer to Figure 99-6.

Item	Part Number	Description*
1	R6683	Tow Cart Crate (31 in. x 38 in. x 66.50 in.)
2	R5387	Windshield Box (21.75 in. x 40 in. x 66 in.; cardboard. Holds up to four windshields.)
3	R5352	Main Rotor Blade Crate (21.75 in. x 17 in. x 206.50 in.)
4	R5385	Push-Pull Tube/Tail Rotor Drive Shaft Crate (10.25 in. x 11.50 in. x 192 in.)

* Dimensions are approximate and expressed in inches. Dimensions are provided in height x width x length.

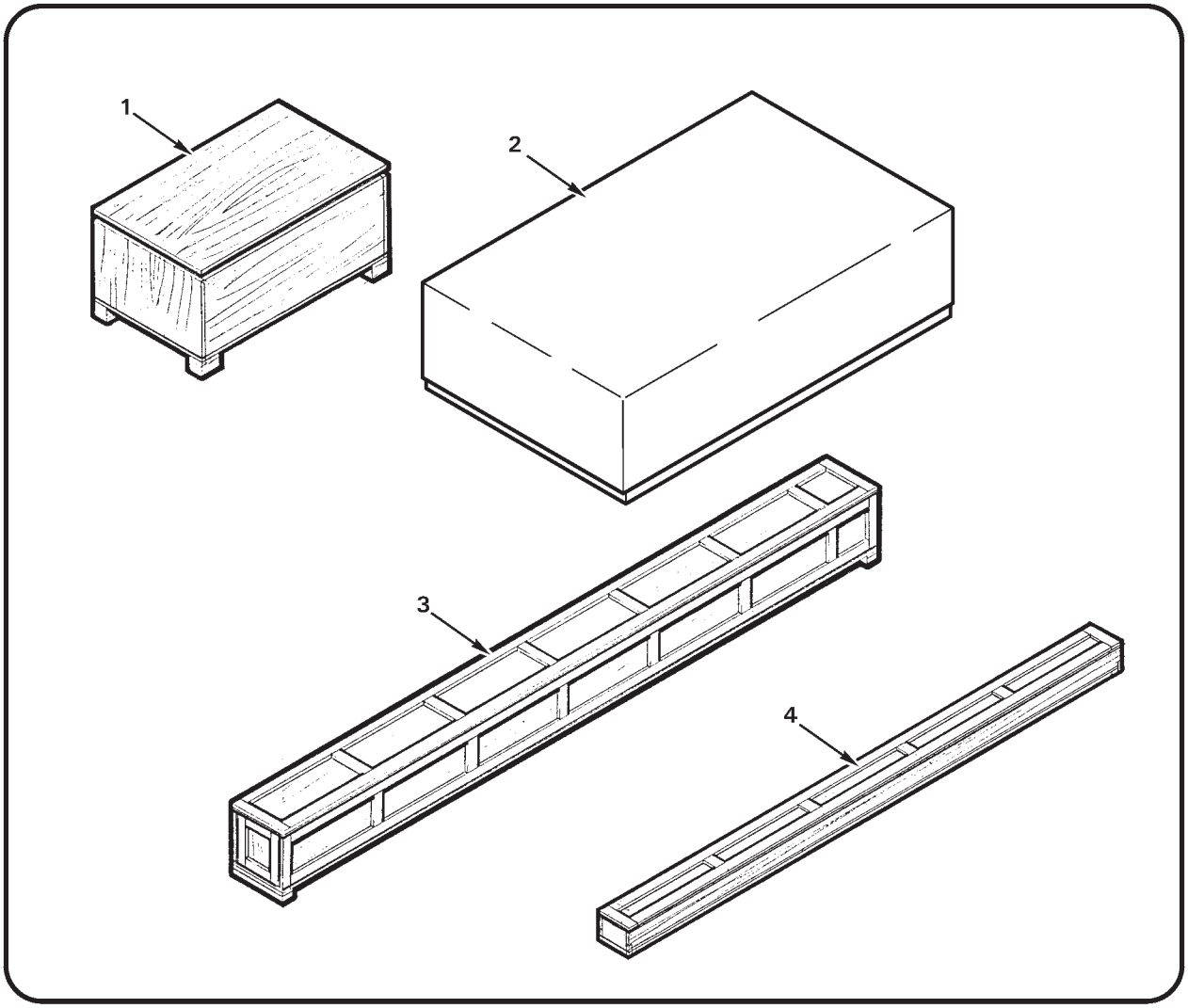

FIGURE 99-6 SHIPPING CRATES

99-20 Illustrations and Tasks (continued)

Refer to Figure 99-7.

Item	Part Number	Description*
1	R5386	Cabin Door Crate (23.75 in. x 34 in. x 60 in.; holds [1] bubble or [2] regular doors)
2	R5388	Tailcone Crate (27.25 in. x 24 in. x 192 in.)
3	R5702	Main Rotor Blade/Tailcone Crate (28 in. x 30 in. x 208 in.)
4	R7982	Main Rotor Gearbox Crate (27 in. x 28.75 in. x 89.50 in.)

* Dimensions are approximate and expressed in inches. Dimensions are provided in height x width x length.

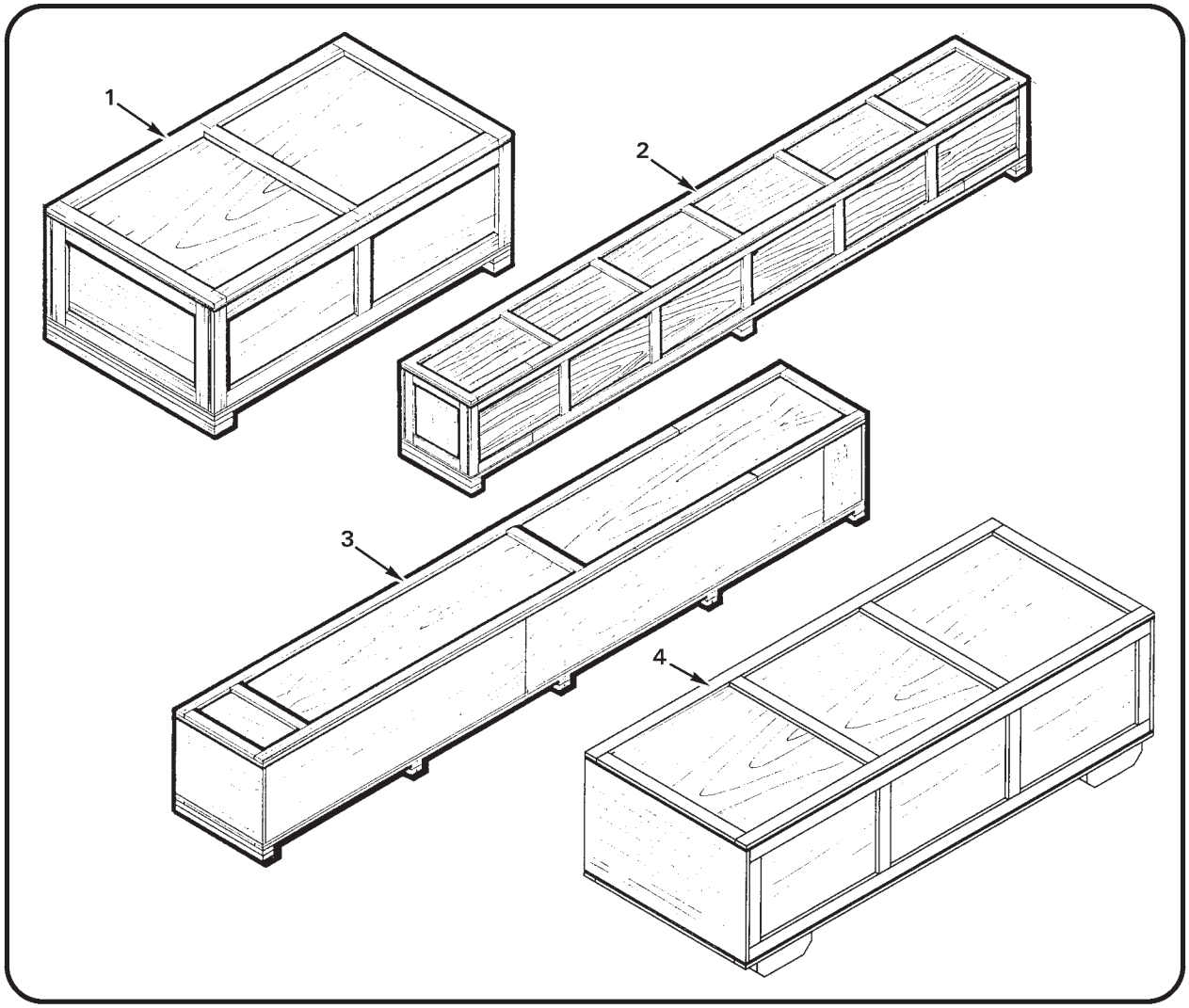

FIGURE 99-7 SHIPPING CRATES

CHAPTER 100

REVISION LOG

Section	*Title*	*Page*
—	Revision Log	100.1

Intentionally Blank

REVISION LOG

APR 2017

The R66 Maintenance Manual (MM) list of effective pages and effective dates are given below. If a previously issued page is not listed below, it is no longer an effective page and must be discarded. The issue or revision date is in bold at the top of each revision log page.

Please visit www.robinsonheli.com to verify the issue or revision date is current. Subscription order and renewal forms are located at www.robinsonheli.com.

Page	Date	Page	Date	Page	Date
i	APR 2017	4.5	MAY 2015	5.21A	APR 2017
ii	APR 2017	4.6	MAY 2015	5.21B	APR 2017
iii	APR 2017	4.7	MAY 2015	5.22	APR 2017
iv	APR 2017	4.8	MAY 2015	5.23	SEP 2012
v	APR 2017	4.9	MAY 2015	5.24	SEP 2012
vi	APR 2017	4.10	MAY 2015	5.25	APR 2017
vii	APR 2017			5.26	APR 2017
viii	APR 2017	5.i	APR 2017	5.27	APR 2017
		5.ii	APR 2017	5.28	APR 2017
1.i	APR 2017	5.1	APR 2017	5.28A	APR 2017
1.ii	APR 2017	5.2	APR 2017	5.28B	APR 2017
1.1	APR 2017	5.3	MAY 2015	5.29	MAY 2015
1.2	APR 2017	5.4	MAY 2015	5.30	MAY 2015
1.3	APR 2017	5.5	SEP 2012	5.31	MAY 2015
1.4	APR 2017	5.6	SEP 2012	5.32	MAY 2015
1.4A	APR 2017	5.7	APR 2017	5.33	MAY 2015
1.4B	APR 2017	5.8	APR 2017	5.34	MAY 2015
1.5	SEP 2012	5.9	APR 2017	5.35	MAY 2015
1.6	SEP 2012	5.10	APR 2017	5.36	MAY 2015
1.7	MAY 2015	5.11	APR 2017	5.37	MAY 2015
1.8	MAY 2015	5.12	APR 2017	5.38	MAY 2015
1.9	MAY 2015	5.13	APR 2017	5.39	MAY 2015
1.10	MAY 2015	5.14	APR 2017	5.40	MAY 2015
		5.15	APR 2017	5.41	MAY 2015
4.i	APR 2017	5.16	APR 2017	5.42	MAY 2015
4.ii	APR 2017	5.16A	APR 2017	5.43	MAY 2015
4.1	SEP 2011	5.16B	APR 2017	5.44	MAY 2015
4.2	SEP 2011	5.17	MAY 2015	5.45	MAY 2015
4.3	APR 2017	5.18	MAY 2015	5.46	MAY 2015
4.4	APR 2017	5.19	SEP 2012	5.47	APR 2017
4.4A	APR 2017	5.20	SEP 2012	5.47A	APR 2017
4.4B	APR 2017	5.21	APR 2017	5.47B	APR 2017

REVISION LOG

APR 2017

Page	Date
5.48	APR 2017
5.49	APR 2017
5.50	APR 2017
6.i	APR 2017
6.ii	APR 2017
6.1	25 OCT 2010
6.2	25 OCT 2010
6.3	25 OCT 2010
6.4	25 OCT 2010
6.5	25 OCT 2010
6.6	25 OCT 2010
6.7	25 OCT 2010
6.8	25 OCT 2010
6.9	APR 2017
6.10	APR 2017
6.11	APR 2017
6.12	APR 2017
7.i	25 OCT 2010
7.ii	25 OCT 2010
7.1	SEP 2012
7.2	SEP 2012
7.3	SEP 2012
7.4	SEP 2012
7.5	25 OCT 2010
7.6	25 OCT 2010
8.i	25 OCT 2010
8.ii	25 OCT 2010
8.1	SEP 2012
8.2	SEP 2012
8.3	SEP 2012
8.4	SEP 2012
8.5	25 OCT 2010
8.6	25 OCT 2010
8.7	SEP 2012
8.8	SEP 2012
8.9	25 OCT 2010
8.10	25 OCT 2010
8.11	25 OCT 2010
8.12	25 OCT 2010
8.13	SEP 2012
8.14	SEP 2012
9.i	25 OCT 2010
9.ii	25 OCT 2010
9.1	25 OCT 2010
9.2	25 OCT 2010
9.3	SEP 2012
9.4	SEP 2012
10.i	25 OCT 2010
10.ii	25 OCT 2010
10.1	SEP 2012
10.2	SEP 2012
10.3	25 OCT 2010
10.4	25 OCT 2010
10.5	25 OCT 2010
10.6	25 OCT 2010
11.i	APR 2017
11.ii	APR 2017
11.1	APR 2017
11.2	APR 2017
12.i	SEP 2012
12.ii	SEP 2012
12.1	SEP 2012
12.2	SEP 2012
12.3	SEP 2012
12.4	SEP 2012
12.5	SEP 2012
12.6	SEP 2012
12.7	SEP 2012
12.8	SEP 2012
12.9	SEP 2012
12.10	SEP 2012
12.11	SEP 2012
12.12	SEP 2012
12.13	APR 2017
12.13A	APR 2017
12.13B	APR 2017
12.14	APR 2017
12.15	APR 2017
12.16	APR 2017
12.17	MAY 2015
12.18	MAY 2015
12.19	SEP 2012
12.20	SEP 2012
18.i	APR 2017
18.ii	APR 2017
18.1	25 OCT 2010
18.2	25 OCT 2010
18.3	25 OCT 2010
18.4	25 OCT 2010
18.5	APR 2017
18.6	APR 2017
18.7	APR 2017
18.7A	APR 2017
18.7B	APR 2017
18.7C	APR 2017
18.7D	APR 2017
18.8	APR 2017
18.9	APR 2017
18.10	APR 2017
18.10A	APR 2017
18.10B	APR 2017
18.11	25 OCT 2010
18.12	25 OCT 2010
18.13	25 OCT 2010
18.14	25 OCT 2010
18.15	25 OCT 2010

REVISION LOG

APR 2017

Page	Date
18.16	25 OCT 2010
18.17	SEP 2012
18.18	SEP 2012
18.19	25 OCT 2010
18.20	25 OCT 2010
18.21	25 OCT 2010
18.22	25 OCT 2010
18.23	SEP 2012
18.24	SEP 2012
18.25	SEP 2012
18.26	SEP 2012
18.27	MAY 2015
18.28	MAY 2015
18.29	MAY 2015
18.30	MAY 2015
18.31	MAY 2015
18.32	MAY 2015
18.33	MAY 2015
18.34	MAY 2015
20.i	APR 2017
20.ii	APR 2017
20.1	25 OCT 2010
20.2	25 OCT 2010
20.3	25 OCT 2010
20.4	25 OCT 2010
20.5	MAY 2015
20.6	MAY 2015
20.7	APR 2017
20.8	APR 2017
20.9	APR 2017
20.10	APR 2017
20.11	APR 2017
20.11A	APR 2017
20.11B	APR 2017
20.12	APR 2017
20.13	APR 2017
20.14	APR 2017
20.15	APR 2017
20.16	APR 2017
20.17	APR 2017
20.18	APR 2017
20.18A	APR 2017
20.18B	APR 2017
20.19	APR 2017
20.20	APR 2017
20.21	APR 2017
20.22	APR 2017
20.23	APR 2017
20.24	APR 2017
20.25	APR 2017
20.26	APR 2017
21.i	SEP 2012
21.ii	SEP 2012
21.1	MAY 2015
21.2	MAY 2015
21.3	SEP 2012
21.4	SEP 2012
21.5	MAY 2015
21.6	MAY 2015
21.7	SEP 2012
21.8	SEP 2012
21.9	SEP 2012
21.10	SEP 2012
21.11	SEP 2012
21.12	SEP 2012
21.13	SEP 2012
21.14	SEP 2012
22.i	MAY 2015
22.ii	MAY 2015
22.1	MAY 2015
22.2	MAY 2015
22.3	APR 2017
22.4	APR 2017
22.5	APR 2017
22.6	APR 2017
22.7	MAY 2015
22.8	MAY 2015
22.9	MAY 2015
22.10	MAY 2015
22.11	MAY 2015
22.12	MAY 2015
25.i	SEP 2012
25.ii	SEP 2012
25.1	SEP 2012
25.2	SEP 2012
25.3	SEP 2012
25.4	SEP 2012
25.5	SEP 2012
25.6	SEP 2012
25.7	SEP 2012
25.8	SEP 2012
25.9	25 OCT 2010
25.10	25 OCT 2010
25.11	25 OCT 2010
25.12	25 OCT 2010
28.i	APR 2017
28.ii	APR 2017
28.1	APR 2017
28.2	APR 2017
28.3	APR 2017
28.4	APR 2017
28.5	APR 2017
28.6	APR 2017
28.7	APR 2017
28.8	APR 2017
28.9	APR 2017
28.10	APR 2017
28.11	APR 2017
28.12	APR 2017

REVISION LOG

APR 2017

Page	Date
28.13	APR 2017
28.14	APR 2017
28.15	APR 2017
28.16	APR 2017
28.17	APR 2017
28.18	APR 2017
28.19	APR 2017
28.20	APR 2017
28.21	APR 2017
28.22	APR 2017
28.23	APR 2017
28.24	APR 2017
28.25	APR 2017
28.26	APR 2017
29.i	MAY 2015
29.ii	MAY 2015
29.1	MAY 2015
29.2	MAY 2015
29.3	MAY 2015
29.4	MAY 2015
29.5	MAY 2015
29.6	MAY 2015
29.7	MAY 2015
29.8	MAY 2015
32.i	SEP 2012
32.ii	SEP 2012
32.1	MAY 2015
32.2	MAY 2015
32.3	APR 2017
32.3A	APR 2017
32.3B	APR 2017
32.4	APR 2017
32.5	SEP 2012
32.6	SEP 2012
32.7	SEP 2012
32.8	SEP 2012
32.9	SEP 2012
32.10	SEP 2012
32.11	SEP 2012
32.12	SEP 2012
32.13	SEP 2012
32.14	SEP 2012
32.15	SEP 2012
32.16	SEP 2012
32.17	SEP 2012
32.18	SEP 2012
32.19	SEP 2012
32.20	SEP 2012
32.21	SEP 2012
32.22	SEP 2012
32.23	SEP 2012
32.24	SEP 2012
33.i	MAY 2015
33.ii	MAY 2015
33.1	MAY 2015
33.2	MAY 2015
33.3	MAY 2015
33.4	MAY 2015
52.i	25 OCT 2010
52.ii	25 OCT 2010
52.1	25 OCT 2010
52.2	25 OCT 2010
52.3	25 OCT 2010
52.4	25 OCT 2010
52.5	25 OCT 2010
52.6	25 OCT 2010
52.7	25 OCT 2010
52.8	25 OCT 2010
52.9	APR 2017
52.10	APR 2017
52.11	APR 2017
52.12	APR 2017
53.i	APR 2017
53.ii	APR 2017
53.1	25 OCT 2010
53.2	25 OCT 2010
53.3	25 OCT 2010
53.4	25 OCT 2010
53.5	25 OCT 2010
53.6	25 OCT 2010
53.7	25 OCT 2010
53.8	25 OCT 2010
53.9	25 OCT 2010
53.10	25 OCT 2010
53.11	MAY 2015
53.12	MAY 2015
53.13	MAY 2015
53.14	MAY 2015
53.15	25 OCT 2010
53.16	25 OCT 2010
53.17	APR 2017
53.18	APR 2017
53.19	MAY 2015
53.20	MAY 2015
53.21	MAY 2015
53.22	MAY 2015
62.i	25 OCT 2010
62.ii	25 OCT 2010
62.1	25 OCT 2010
62.2	25 OCT 2010
62.3	25 OCT 2010
62.4	25 OCT 2010
62.5	MAY 2015
62.6	MAY 2015
62.7	25 OCT 2010
62.8	25 OCT 2010
62.9	25 OCT 2010
62.10	25 OCT 2010

REVISION LOG

APR 2017

Page	Date
62.11	25 OCT 2010
62.12	25 OCT 2010
62.13	25 OCT 2010
62.14	25 OCT 2010
62.15	25 OCT 2010
62.16	25 OCT 2010
62.17	25 OCT 2010
62.18	25 OCT 2010
62.19	MAY 2015
62.20	MAY 2015
62.21	25 OCT 2010
62.22	25 OCT 2010
62.23	25 OCT 2010
62.24	25 OCT 2010
62.25	25 OCT 2010
62.26	25 OCT 2010
62.27	25 OCT 2010
62.28	25 OCT 2010
63.i	APR 2017
63.ii	APR 2017
63.1	APR 2017
63.2	APR 2017
63.3	APR 2017
63.4	APR 2017
63.5	APR 2017
63.6	APR 2017
63.7	APR 2017
63.8	APR 2017
63.9	APR 2017
63.10	APR 2017
63.11	APR 2017
63.12	APR 2017
63.13	APR 2017
63.14	APR 2017
64.i	25 OCT 2010
64.ii	25 OCT 2010
64.1	25 OCT 2010
64.2	25 OCT 2010
64.3	25 OCT 2010
64.4	25 OCT 2010
64.5	25 OCT 2010
64.6	25 OCT 2010
64.7	25 OCT 2010
64.8	25 OCT 2010
64.9	25 OCT 2010
64.10	25 OCT 2010
64.11	25 OCT 2010
64.12	25 OCT 2010
64.13	25 OCT 2010
64.14	25 OCT 2010
65.i	SEP 2012
65.ii	SEP 2012
65.1	MAY 2015
65.2	MAY 2015
65.3	MAY 2015
65.4	MAY 2015
65.5	MAY 2015
65.6	MAY 2015
65.7	MAY 2015
65.8	MAY 2015
65.9	MAY 2015
65.10	MAY 2015
65.11	SEP 2012
65.12	SEP 2012
67.i	MAY 2015
67.ii	MAY 2015
67.1	MAR 2012
67.2	MAR 2012
67.3	25 OCT 2010
67.4	25 OCT 2010
67.5	25 OCT 2010
67.6	25 OCT 2010
67.7	APR 2017
67.8	APR 2017
67.9	APR 2017
67.10	APR 2017
67.11	MAY 2015
67.12	MAY 2015
67.13	MAY 2015
67.14	MAY 2015
67.15	MAY 2015
67.16	MAY 2015
67.17	MAY 2015
67.18	MAY 2015
71.i	APR 2017
71.ii	APR 2017
71.1	SEP 2012
71.2	SEP 2012
71.3	SEP 2012
71.4	SEP 2012
71.5	SEP 2012
71.6	SEP 2012
71.7	SEP 2012
71.8	SEP 2012
71.9	APR 2017
71.10	APR 2017
71.11	APR 2017
71.12	APR 2017
71.13	APR 2017
71.14	APR 2017
71.15	APR 2017
71.16	APR 2017
71.17	APR 2017
71.18	APR 2017
71.19	APR 2017
71.20	APR 2017
71.21	APR 2017
71.22	APR 2017

REVISION LOG

APR 2017

Page	Date
75.i	25 OCT 2010
75.ii	25 OCT 2010
75.1	25 OCT 2010
75.2	25 OCT 2010
76.i	25 OCT 2010
76.ii	25 OCT 2010
76.1	SEP 2012
76.2	SEP 2012
76.3	25 OCT 2010
76.4	25 OCT 2010
76.5	25 OCT 2010
76.6	25 OCT 2010
76.7	25 OCT 2010
76.8	25 OCT 2010
79.i	APR 2017
79.ii	APR 2017
79.1	APR 2017
79.2	APR 2017
79.3	APR 2017
79.4	APR 2017
79.5	APR 2017
79.6	APR 2017
79.7	APR 2017
79.8	APR 2017
95.i	APR 2017
95.ii	APR 2017
95.1	APR 2017
95.2	APR 2017
95.3	APR 2017
95.4	APR 2017
95.5	APR 2017
95.6	APR 2017
95.7	APR 2017
95.8	APR 2017
95.9	APR 2017
95.10	APR 2017
95.11	APR 2017
95.12	APR 2017
95.13	APR 2017
95.14	APR 2017
95.15	APR 2017
95.16	APR 2017
95.17	APR 2017
95.18	APR 2017
95.19	APR 2017
95.20	APR 2017
95.21	APR 2017
95.22	APR 2017
95.23	APR 2017
95.24	APR 2017
95.25	APR 2017
95.26	APR 2017
95.27	APR 2017
95.28	APR 2017
95.29	APR 2017
95.30	APR 2017
95.31	APR 2017
95.32	APR 2017
96.i	APR 2017
96.ii	APR 2017
96.1	APR 2017
96.2	APR 2017
96.3	APR 2017
96.4	APR 2017
96.5	APR 2017
96.6	APR 2017
96.7	APR 2017
96.8	APR 2017
96.9	APR 2017
96.10	APR 2017
96.11	APR 2017
96.12	APR 2017
96.13	APR 2017
96.14	APR 2017
96.15	APR 2017
96.16	APR 2017
96.17	APR 2017
96.18	APR 2017
97.i	APR 2017
97.ii	APR 2017
97.1	MAY 2015
97.2	MAY 2015
97.3	MAY 2015
97.4	MAY 2015
97.5	MAY 2015
97.6	MAY 2015
97.7	MAY 2015
97.8	MAY 2015
97.9	MAY 2015
97.10	MAY 2015
97.11	MAY 2015
97.12	MAY 2015
97.13	MAY 2015
97.14	MAY 2015
97.15	MAY 2015
97.16	MAY 2015
97.17	MAY 2015
97.18	MAY 2015
97.19	MAY 2015
97.20	MAY 2015
97.21	MAY 2015
97.22	MAY 2015
97.23	MAY 2015
97.24	MAY 2015
97.25	MAY 2015
97.26	MAY 2015
97.27	MAY 2015
97.28	MAY 2015
97.29	APR 2017

REVISION LOG

APR 2017

Page	Date	Page	Date	Page	Date
97.30	APR 2017	98.35	APR 2017		
		98.36	APR 2017		
98.i	APR 2017	98.37	APR 2017		
98.ii	APR 2017	98.38	APR 2017		
98.1	APR 2017	98.39	APR 2017		
98.2	APR 2017	98.40	APR 2017		
98.3	APR 2017	98.41	APR 2017		
98.4	APR 2017	98.42	APR 2017		
98.5	APR 2017	98.43	APR 2017		
98.6	APR 2017	98.44	APR 2017		
98.7	APR 2017	98.45	APR 2017		
98.8	APR 2017	98.46	APR 2017		
98.9	APR 2017	98.47	APR 2017		
98.10	APR 2017	98.48	APR 2017		
98.11	APR 2017				
98.12	APR 2017	99.i	APR 2017		
98.13	APR 2017	99.ii	APR 2017		
98.14	APR 2017	99.1	APR 2017		
98.15	APR 2017	99.2	APR 2017		
98.16	APR 2017	99.3	APR 2017		
98.17	APR 2017	99.4	APR 2017		
98.18	APR 2017	99.5	APR 2017		
98.19	APR 2017	99.6	APR 2017		
98.20	APR 2017	99.7	APR 2017		
98.21	APR 2017	99.8	APR 2017		
98.22	APR 2017				
98.23	APR 2017	100.i	APR 2017		
98.24	APR 2017	100.ii	APR 2017		
98.25	APR 2017	100.1	APR 2017		
98.26	APR 2017	100.2	APR 2017		
98.27	APR 2017	100.3	APR 2017		
98.28	APR 2017	100.4	APR 2017		
98.29	APR 2017	100.5	APR 2017		
98.30	APR 2017	100.6	APR 2017		
98.31	APR 2017	100.7	APR 2017		
98.32	APR 2017	100.8	APR 2017		
98.33	APR 2017				
98.34	APR 2017				

Intentionally Blank